# Pressure transmitter Model S–20
## Type S–20
## Item no.: 48790324

| | |
|---|---|
| **MEASURING RANGE** | |
| Measuring range | 0...100 kPa gauge |
| Overpressure limit | 3 times |
| Vacuum tightness | yes |
| **OUTPUT SIGNAL** | |
| Output signal | 4...20 mA, 2-wire |
| Permissible load in Ω | ≤ (power supply - 7.5 V) / 0.023 A |
| **POWER SUPPLY** | |
| Power supply | DC 8...35 V |
| Total current consumption | Current signal, max. 25 mA |
| **ACCURACY INFORMATION** | |
| Non-linearity | 0.125% BFSL |
| Accuracy at calibration temperature | ≤ ±0.25 % of span |
| Long-term drift | ≤ ±0.1 % of span |
| without additional error at calibration temperature | yes |
| **TEMPERATURE ERROR** | |
| Temperature error -20 ... +80°C | 1 % |
| Temperature error -30 ... +100°C | 1.5 % |
| **OPERATING ENVIRONMENT CONDITIONS** | |
| Permissible medium temperature | -30...+100°C |
| Storage and transport temperature | -40 ... +70°C |
| shock and vibration resistance | 100 g shock, 20 g vibration |
| Service life | 100 million load cycle |
| **PROCESS CONNECTION** | |
| Process connection | 1/4 NPT female |
| Sealing | without |
| **ELECTRICAL CONNECTION** | |
| Electrical connection | angular connector DIN 175301-803 A |
| Tailoring electrical connection | mating connector included |
| Ingress protection | IP 65 |
| pin assignment el. connection | U+=1, U-=2 |
| | -30 ... +100 °C (-22 ... +212 °F) |
| item based datasheet headlines | ELECTRICAL SAFETY |
| Short-circuit resistance | S+ vs. U- |
| Reverse polarity protection | U+ vs. U- |
| Insulation voltage | DC 750 V |
| **CE-CONFORMITY, APPROVALS AND CERTIFICATES** | |
| CE conformity | PED 2014/65/EU |
| CE conformity2 | EMC 2014/30/EU |
| CE-Konformität Teil3 | RoHS 2011/65/EU |
| Approvals | cULus |

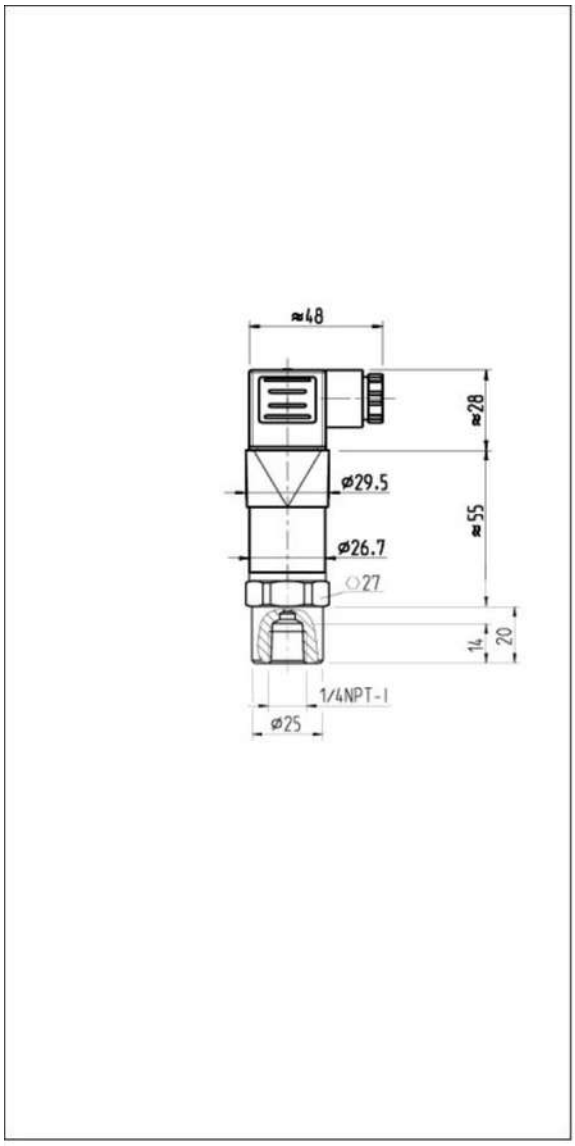




WIKA Instruments – 38 Avenue du Gros Chêne – 95220 HERBLAY
Phone0 820 95 10 10
info_fr@wika.com • http://www.wika.fr