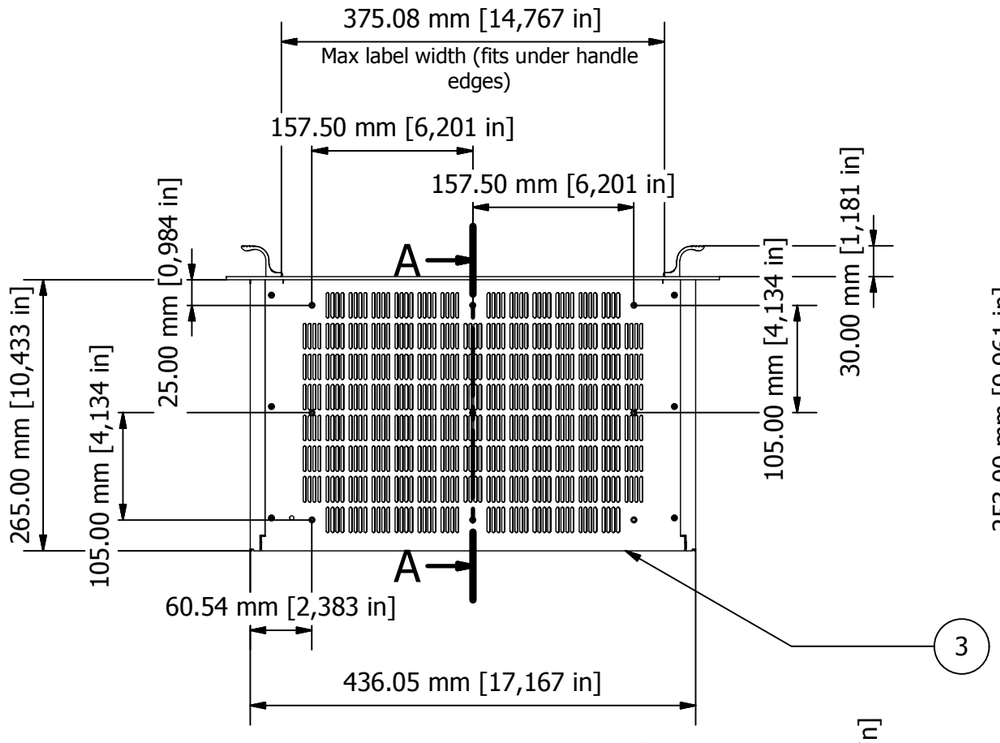

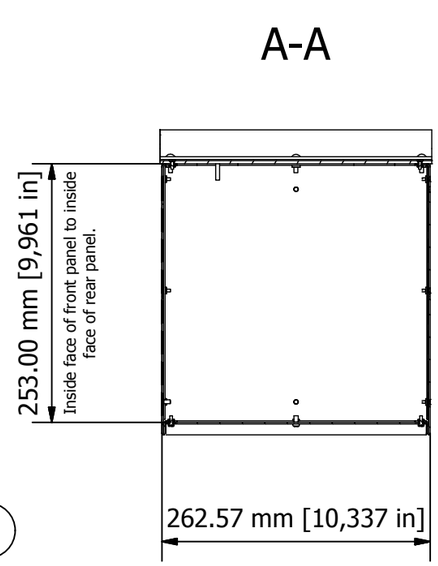

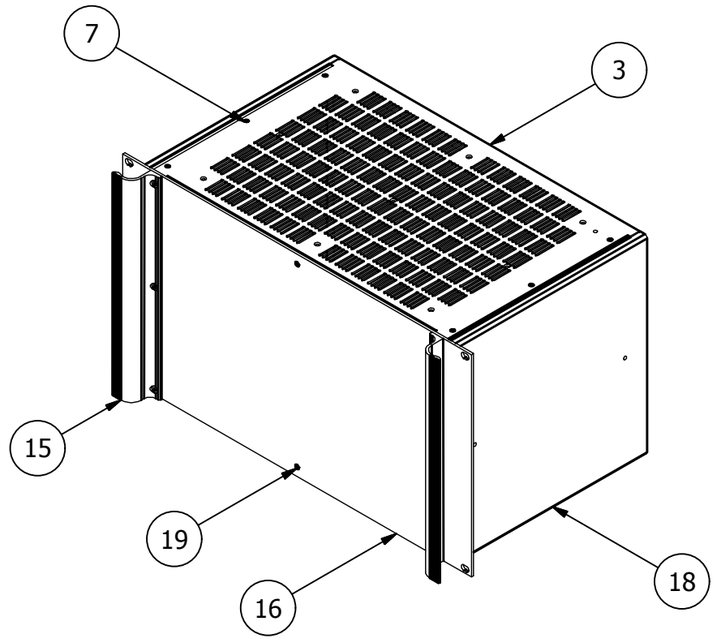

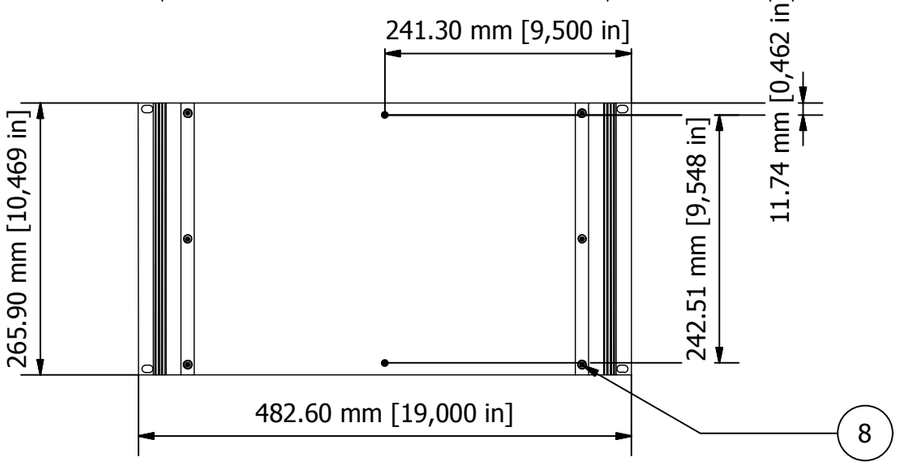

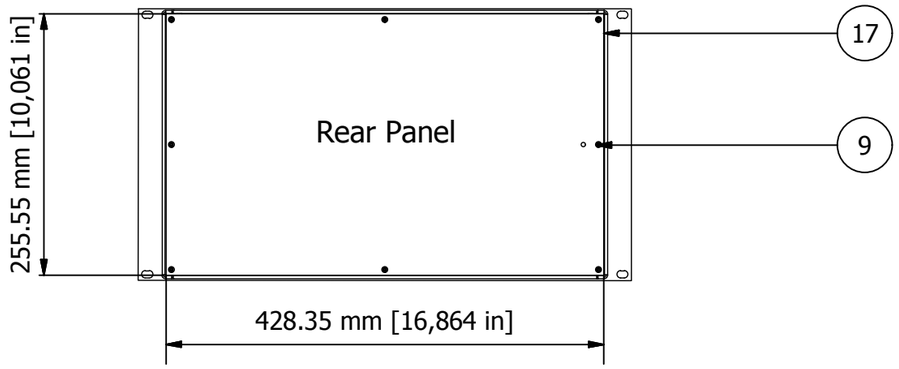

NOTES.

Case metalwork is made from 1.5 mm aluminium and painted RAL 9005 fine texture black.
Front panel is made from 3 mm aluminium with a clear etch & anodise finish.
Handles are made from an aluminium extrusion & also painted RAL 9005 fine texture black.
All parts are fitted with M4 studs for earth use.

PARTS LIST			
ITEM	QTY	PART NUMBER	DESCRIPTION
3	2	M6203049	Top/Base Cover
7	12	M3x8 CSK Screw (B)	Cover Screws
8	6	M4x16 CSK Screw (B)	Front Panel Screws
9	8	M3x8 Pan Screw (B)	Rear Panel Screws
15	2	M6200609	Handles
16	1	M6219060	Front Panel
17	1	M6201069	Rear Panel
18	2	M6202639	Side Panels
19	2	M3x8 CSK Screw	Front Panel Screws

FIRST ANGLE PROJECTION

Designed by	Description	Date	Scale
L Clark	Combimet 6U x 19" x 265 mm Vented	14/10/2013	1:6

METCASE ENCLOSURES
15 Brunel Way, Segensworth East, Fareham, Hampshire, PO15 5TX, UK.
Tel: +44 (0)1489 583858 Email: metcase@okw.co.uk
www.metcase.com

Part Number	Issue	Sheet
M6219649	1	1 / 1

© OKW Enclosures Ltd (Date as shown). This drawing contains proprietary information of OKW Enclosures Ltd and is tendered subject to the following conditions. The information be retained in confidence, not be reproduced or copied, and not be used or incorporated in any product, unless permission is obtained in writing from OKW Enclosures Ltd.