Piston rod cylinders → Short-stroke and compact cylinders

Series KHZ

► Ø 12 - 100 mm ► Ports: M5 - G 1/4 ► double-acting ► with magnetic piston ► cushioning: elastic ► piston rod: internal thread



00136212



a11

Compressed air connection	internal thread
Ambient temperature min./max.	-25°C / +80°C
Medium temperature min./max.	-25°C / +80°C
Medium	Compressed air
Max. particle size	50 μm
Oil content of compressed air	0 mg/m³ - 5 mg/m³
Pressure for determining piston forces	6,3 bar

Materials:	
Cylinder tube	Aluminum, anodized
Piston rod	Stainless steel
Piston	Nitrile rubber
End cover	Aluminum
Scraper	Polyurethane

Technical Remarks

- The pressure dew point must be at least 15 °C under ambient and medium temperature and may not exceed 3 °C.
- The oil content of air pressure must remain constant during the life cycle.
- Use only the approved oils from Bosch Rexroth, see chapter „Technical information“.

Piston Ø		**[mm]**	**12**	**16**	**20**	**25**	**32**
Retracting piston force		[N]	53	95	148	260	260
Extending piston force		[N]	71	127	198	309	309
Impact energy		[J]	0.04	0.01	0.08	0.1	0.16
Weight	0 mm stroke	[kg]	0.05	0.065	0.092	0.178	0.195
	+10 mm stroke	[kg]	0.07	0.085	0.111	0.201	0.281
Working pressure min./max.		[bar]	1 - 10	1 - 10	1 - 10	1 - 10	0.6 - 10
Note			1)	1)	1)	1)	2)

Piston Ø		**[mm]**	**40**	**50**	**63**	**80**	**100**
Retracting piston force		[N]	720	1110	1837	2857	4639
Extending piston force		[N]	792	1237	1964	3167	4948
Impact energy		[J]	0.24	0.32	0.38	0.38	0.5
Weight	0 mm stroke	[kg]	0.285	0.388	0.636	1.222	2.385
	+10 mm stroke	[kg]	0.367	0.458	0.726	1.442	2.631
Working pressure min./max.		[bar]	0.6 - 10	0.6 - 10	0.6 - 10	0.6 - 10	0.6 - 10
Note			2)	2)	2)	2)	2)

1) Material front cover: Brass
2) Material front cover: Aluminum

Piston rod cylinders → Short-stroke and compact cylinders

Series KHZ

► Ø 12 - 100 mm ► Ports: M5 - G 1/4 ► double-acting ► with magnetic piston ► cushioning: elastic ► piston rod: internal thread



Piston Ø Piston rod thread Ports	12 M3 M5	16 M5 M5	20 M5 M5	25 M5 G 1/8	32 M6 G 1/8
Stroke 5	**0822010600**	**0822010610**	**0822010620**	**0822010630**	**0822010640**
10	**0822010601**	**0822010611**	**0822010621**	**0822010631**	**0822010641**
15	**0822010602**	**0822010612**	**0822010622**	**0822010632**	**0822010642**
20	**0822010603**	**0822010613**	**0822010623**	**0822010633**	**0822010643**
25	**0822010604**	**0822010614**	**0822010624**	**0822010634**	**0822010644**
30	**0822010605**	**0822010615**	**0822010625**	**0822010635**	**0822010645**
40	**0822010606**	**0822010616**	**0822010626**	**0822010636**	**0822010646**
50	-	-	**0822010627**	**0822010637**	**0822010647**
80	-	-	-	-	**0822010648**
100	-	-	-	-	**0822010649**
Piston Ø **Piston rod thread** **Ports**	**40** **M6** **G 1/8**	**50** **M8** **G 1/8**	**63** **M8** **G 1/8**	**80** **M10** **G 1/4**	**100** **M12** **G 1/4**
Stroke 5	**0822010650**	-	-	-	-
10	**0822010651**	**0822010661**	**0822010671**	**0822010681**	**0822010691**
15	**0822010652**	**0822010662**	**0822010672**	-	-
20	**0822010653**	**0822010663**	**0822010673**	-	-
25	**0822010654**	**0822010664**	**0822010674**	**0822010684**	**0822010694**
30	**0822010655**	**0822010665**	**0822010675**	-	-
40	**0822010656**	**0822010666**	**0822010676**	-	-
50	**0822010657**	**0822010667**	**0822010677**	**0822010687**	**0822010697**
80	**0822010658**	**0822010668**	**0822010678**	**0822010688**	**0822010698**
100	**0822010659**	**0822010669**	**0822010679**	**0822010689**	**0822010699**

other versions can be ordered from Bosch Rexroth sales offices

Series KHZ

► Ø 12 - 100 mm ► Ports: M5 - G 1/4 ► double-acting ► with magnetic piston ► cushioning: elastic ► piston rod: internal thread

Dimensions

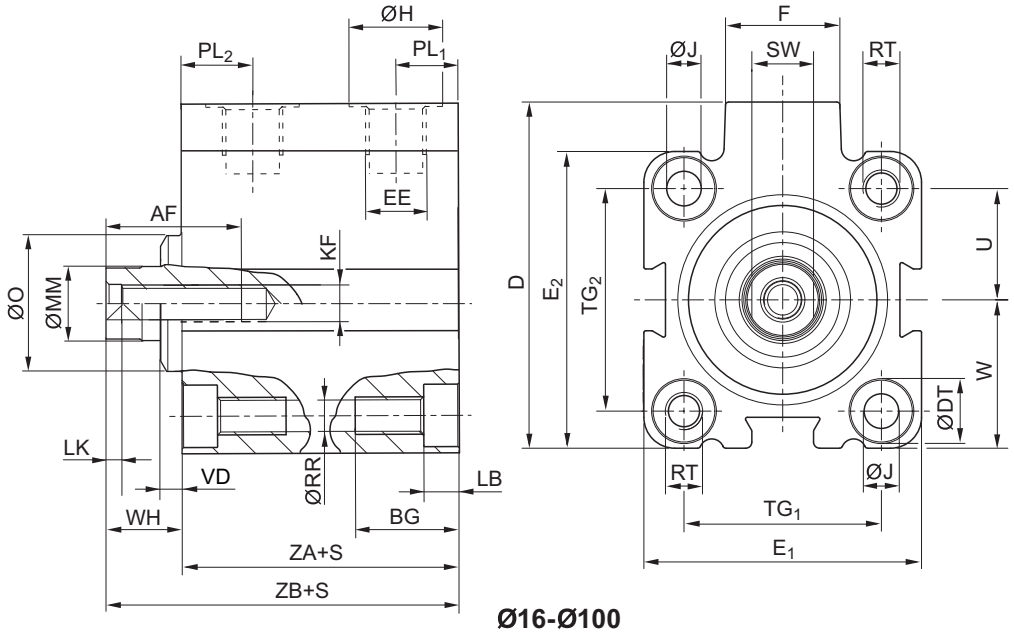

Ø16-Ø100

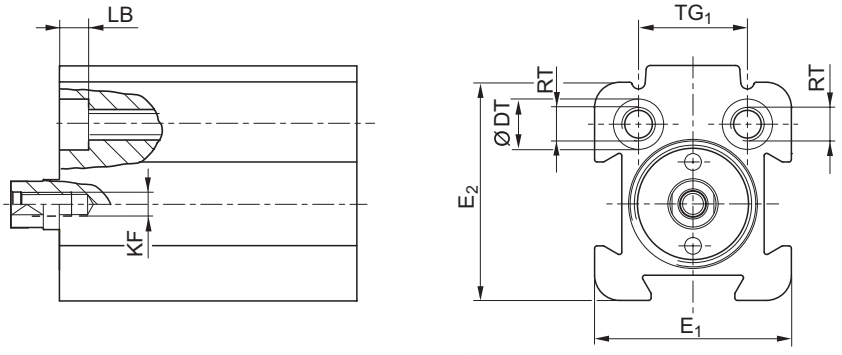

Ø12

00106563

S = stroke

Piston Ø	S	AF +1	BG [1])	D JS15	ØDT H13	E1 JS15	E2 JS15	EE	F	ØH	ØJ	KF	LB +0,4
12	5 - 10	8	12.4	28	6	23.5	26	M 5	11	8	3.3	M 3	3.4
12	15 - 40	8	17.5	28	6	23.5	26	M 5	11	8	3.3	M 3	8.5
16	5 - 10	10	12.4	33	6	28	28	M 5	11.5	8	3.55	M 5	3.4
16	15 - 40	10	17.5	33	6	28	28	M 5	11.5	8	3.55	M 5	8.5
20	5 - 10	10	13.6	37	7.5	32	32	M 5	11	8	4.55	M 5	4.6
20	15 - 50	10	13.6	37	7.5	32	32	M 5	11	8	4.55	M 5	4.6
25	5 - 50	10	13.6	47.5	8	37	39	G 1/8	17.5	15	4.55	M 5	4.6
32	5 - 100	15	16.7	56	10	45	48	G 1/8	18.5	15	5.5	M 6	5.7
40	5 - 100	15	16.7	62.5	10	54.5	54.5	G 1/8	18.5	15	5.5	M 6	5.7
50	10 - 100	18	19.8	73	11	66	66	G 1/8	18	15	7.3	M 8	6.8
63	10 - 100	18	25	88	15	80	80	G 1/8	23	15	9.2	M 8	9
80	10/25/50/ 80/100	18	25	110	15	100	100	G 1/4	27	19	9.2	M 10	9

Piston rod cylinders → Short-stroke and compact cylinders

Series KHZ

► Ø 12 - 100 mm ► Ports: M5 - G 1/4 ► double-acting ► with magnetic piston ► cushioning: elastic ► piston rod: internal thread

Piston Ø	S	AF +1	BG [1]	D JS15	ØDT H13	E1 JS15	E2 JS15	EE	F	ØH	ØJ	KF	LB +0,4
100	10/25/50/ 80/100	20	30	132	17.5	124	124	G 1/4	28	19	11	M 12	11

Piston Ø	LK +0,5	ØMM f8	ØO	PL1	PL2	ØRR	RT	SW -0,3	TG1 ±0,2	TG2 ±0,2	U	W ±0,2	VD -1
12	2	6	–	6	10.5	3.3	M 4	5	13	–	9.5	11.5	–
12	2	6	–	6	10.5	3.3	M 4	5	13	–	9.5	11.5	–
16	2	8	–	6.5	11.3	3.3	M 4	7	20	20	10	14	–
16	2	8	–	6.5	11.3	3.3	M 4	7	20	20	10	14	–
20	2	10	–	6.5	10	4.2	M 5	8	22	22	11	16	–
20	2	10	–	6.5	10	4.2	M 5	8	22	22	11	16	–
25	2	10	20	9.5	11.5	4.2	M 5	8	26	28	14	19.5	3.5
32	2.5	12	22	8.5	15	5.05	M 6	10	32	36	18	24	3.5
40	2.5	12	30	10	13.5	5.05	M 6	10	40	40	20	27.3	4.5
50	3.5	16	35	10	14	6.8	M 8	13	50	50	25	33	6
63	3.5	16	35	11.5	14	8.5	M 10	13	62	62	31	40	6.5
80	4	20	46	12	15.5	8.5	M 10	17	82	82	41	50	8.5
100	4	25	56	12	18.5	10.2	M 12	22	103	103	51.5	62	7

Piston Ø	WH	ZA ±0,2	ZB ±0,8
12	5.5	30.5	36
12	5.5	30.5	36
16	4.5	32	36.5
16	4.5	38	42.5
20	4.5	32	36.5
20	4.5	38	42.5
25	9.5	39	48.5
32	11	39.5	50.5
40	13.5	39.5	53
50	13.5	39.5	53
63	15.5	42	57.5
80	18	46	64
100	20	56	76

1) Min.