



Model Number

RLK31-54/25/31/115

Retroreflective sensor
with 2 m fixed cable

Features

- Cost-optimized series for standard tasks
- Large construction with small housing
- Version for universal voltages
- Relay output

Dimensions

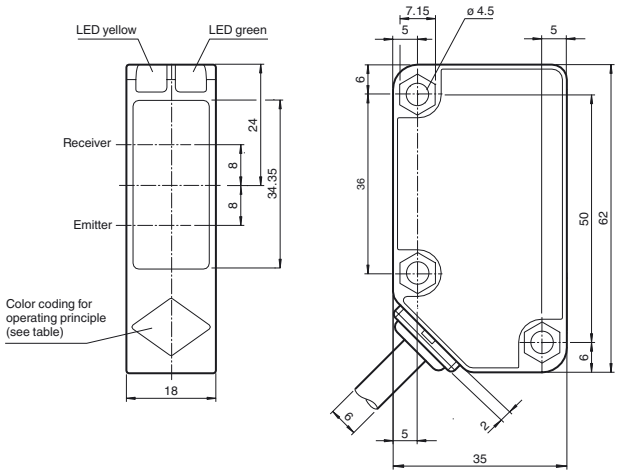

Operating principle	color
Retroreflective sensor with polarisation filter	green
Retroreflective sensor	blue
Diffusive mode sensor	white
Thru -beam sensor	grey
Diffusive mode sensor with background suppression	red

Electrical connection

Option:

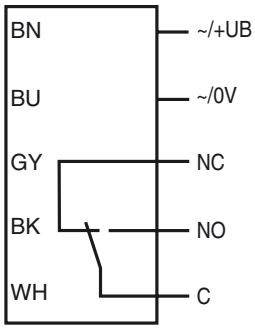

Release date: 2014-05-08 14:44 Date of issue: 2014-05-14 183065_eng.xml

Technical data

General specifications		
Effective detection range		0 ... 9000 mm
Reflector distance		20 ... 9000 mm
Threshold detection range		12 m
Reference target		reflector C110-2
Light source		LED
Light type		modulated visible red light , 630 nm
Polarization filter		yes
Diameter of the light spot		approx. 200 mm at a distance of 6 m
Angle of divergence		3 °
Ambient light limit		50000 Lux
Functional safety related parameters		
$MTTF_d$		790 a
Mission Time (T_M)		20 a
Diagnostic Coverage (DC)		0 %
Indicators/operating means		
Operation indicator		LED green: power on
Function indicator		LED yellow: 1. LED lit constantly: signal > 2 x switching point (function reserve) 2. LED flashes: signal between 1 x switching point and 2 x switching point 3. LED off: signal < switching point
Electrical specifications		
Operating voltage	U_B	24 ... 240 V AC 12 ... 240 V DC
No-load supply current	I_0	≤ 40 mA
Power consumption	P_0	≤ 2 VA
Output		
Switching type		light on
Signal output		Relay, 1 alternator
Switching voltage		max. 240 V AC
Switching current		max. 3 A
Switching power		DC: max. 150 W AC: max. 750 VA
Switching frequency	f	20 Hz
Response time		≤ 25 ms
Ambient conditions		
Ambient temperature		-25 ... 55 °C (-13 ... 131 °F)
Storage temperature		-40 ... 70 °C (-40 ... 158 °F)
Mechanical specifications		
Degree of protection		IP67
Connection		2 m fixed cable
Material		
Housing		Polycarbonate
Optical face		PMMA
Mass		154 g
Compliance with standards and directives		
Directive conformity		EMC Directive 2004/108/EC
Standard conformity		
Product standard		EN 60947-5-2:2007 IEC 60947-5-2:2007
Standards		EN 62103
Approvals and certificates		
Protection class		II , rated voltage ≤ 250 V AC with pollution degree 1-2 according to IEC 60664-1 Output circuit basis insulation of input circuit according to EN 50178, rated insulation voltage 240 V AC
CCC approval		Certified by China Compulsory Certification (CCC)

Accessories

OMH-RL31-01
Mounting bracket

OMH-RL31-02
Mounting bracket narrow

OMH-RL31-03
Mounting bracket narrow

OMH-RL31-04
Mounting aid for round steel ø 12 mm or sheet 1.5 mm ... 3 mm

OMH-RL31-05
Mounting bracket with M10 threaded rod

OMH-RL31-06
Stainless steel mounting bracket with adjustable half clamp on the side

Suitable reflectors and cable sockets can be found in the Internet

Release date: 2014-05-08 14:44 Date of issue: 2014-05-14 183065_eng.xml

Refer to “General Notes Relating to Pepperl+Fuchs Product Information”.
Pepperl+Fuchs Group www.pepperl-fuchs.com
USA: +1 330 486 0001 fa-info@us.pepperl-fuchs.com
Germany: +49 621 776 4411 fa-info@de.pepperl-fuchs.com
Singapore: +65 6779 9091 fa-info@sg.pepperl-fuchs.com
PEPPERL+FUCHS SENSING YOUR NEEDS

Curves/Diagrams

Characteristic response curve

RLK31-54/...31/115

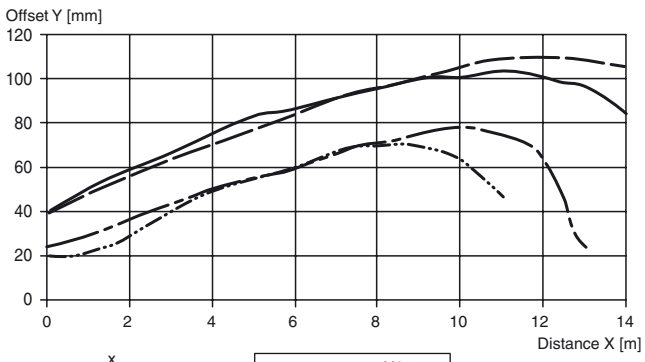

Relative received light strength

RL31-54/...
RLK31-54/...

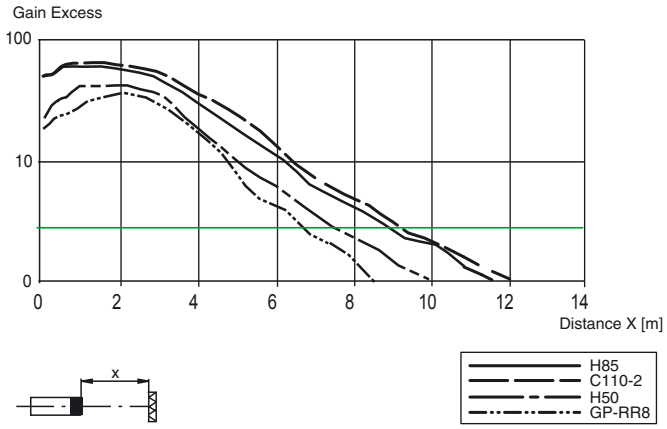

Release date: 2014-05-08 14:44 Date of issue: 2014-05-14 183065_eng.xml