EVC088

Connecting cable with socket

ADOAH040MSS0025H04

Please see the technical note under "Downloads"

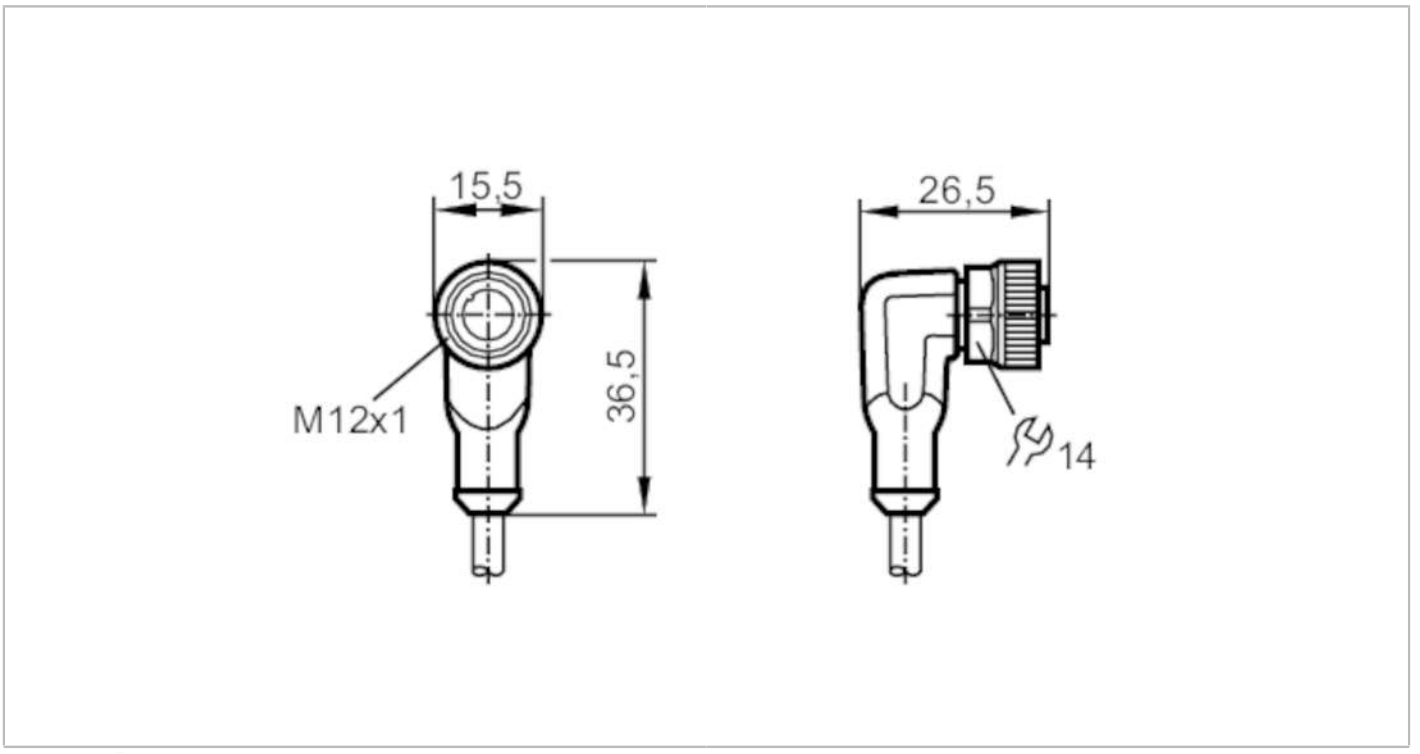

Application		
Special feature		Free from silicone; Halogen-free; Gold-plated contacts; Drag chain suitability
Free from silicone		yes
Electrical data		
Operating voltage	[V]	< 250 AC / < 300 DC
Protection class		II
Max. current load total	[A]	4
Operating conditions		
Ambient temperature	[°C]	-25...90
Note on ambient temperature		cULus: ...75
Ambient temperature (moving)	[°C]	-25...90
Note on ambient temperature (moving)		cULus: ...75
Storage temperature	[°C]	-25...55
Storage humidity	[%]	10...100
Other climatic conditions for storage according to stated class		1K22/ DIN 60721-3-1
Protection		IP 65; IP 67; IP 68; IP 69K
Mechanical data		
Weight	[g]	678.1
Dimensions	[mm]	26.5 x 15.5 x 36.5

EVC088

Connecting cable with socket

ADOAH040MSS0025H04

Moulded-body material	TPU	
Material nut	brass, nickel-plated	
Sealing material	FKM	
Drag chain suitability	yes	
Drag chain suitability	bending radius for flexible use	min. 10 x cable diameter
	travel speed	max. 3.3 m/s for a horizontal travel length of 5 m and max. acceleration of 5 m/s²
	bending cycles	> 5 Mio.
	torsional strain	± 180 °/m

Remarks

Notes	Please see the technical note under "Downloads"
Pack quantity	1 pcs.

Electrical connection

Cable: 25 m, PUR, Halogen-free, black, Ø 4.3 mm; 4 x 0.34 mm² (42 x Ø 0.1 mm)

Electrical connection - socket

Connector: 1 x M12, angled; coding: A; Moulded body: TPU, orange; Locking: brass, nickel-plated; Sealing: FKM; Contacts: gold-plated; Tightening torque: 0.6...1.5 Nm

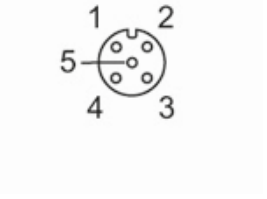

Connection

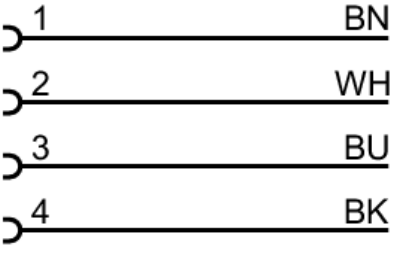

Core colours :

BK = black
BN = brown
BU = blue
WH = white

EVC088

Connecting cable with socket

ADOAH040MSS0025H04

Diagrams and graphs

characteristic line for derating

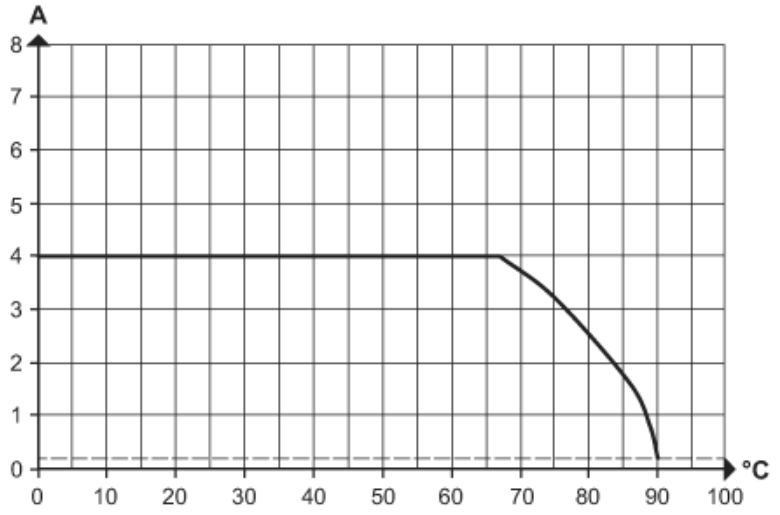

Derating Imax * 0.8 (DIN EN 60512-5-2)

X Ambient temperature [°C]

Y Current [A]