3207 A-2RS1TN9/MT33

SKF Explorer

Dimensions

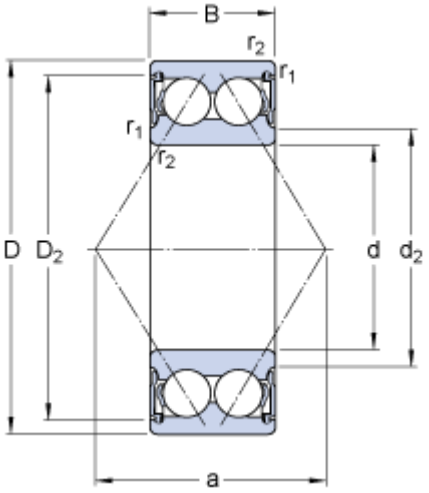

d		35	mm
D		72	mm
B		27	mm
d_2	≈	45.4	mm
D_2	≈	63.85	mm
$r_{1,2}$	min.	1.1	mm
a		42	mm

Abutment dimensions

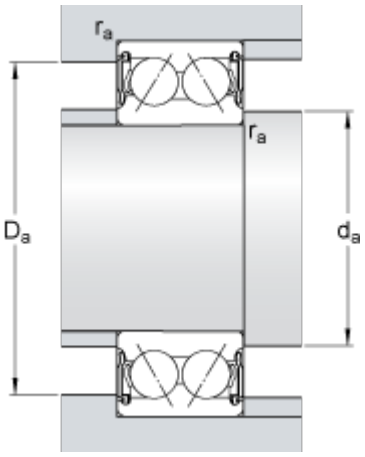

d_a	min.	42	mm
d_a	max.	45	mm
D_a	max.	65	mm
r_a	max.	1	mm

Calculation data

Basic dynamic load rating	C	40	kN
Basic static load rating	C_0	28	kN
Fatigue load limit	P_u	1.2	kN
Limiting speed		6300	r/min
Calculation factor	k_r	0.06	
Calculation factor	e	0.8	
Calculation factor	X	0.63	
Calculation factor	Y_0	0.66	
Calculation factor	Y_1	0.78	
Calculation factor	Y_2	1.24	

Mass

Mass bearing	0.44	kg