sifam tinsley
PRECISION INSTRUMENTATION



Multifunction Meters

Transducers & Isolators

Temperature Controllers

Converters & Recorders

Digital Panel Meters

Current Transformers

Analogue Panel Meters

Shunts

Digital Multimeters

Clamp Meters

Insulation Testers

# CURRENT TRANSFORMERS

Powered by technology
...driven by service

# Current Transformers - Contents


**OMEGA 3 Phase** 4-5

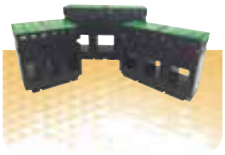

Three phase measuring current transformers suitable for primary ranges from 60A to 630A with 5A secondary. Allowing installations directly next to the moulded case circuit breakers for greater speed of installation and optimisation of space.

**OMEGA single and 3 Phase RJ12 Current Transformers** 6-7



Omega single and 3 Phase RJ12 Current Transformers suitable for primary ranges from 50 to 600A with 100mA secondarys, with RJ12 connection for simple and easy error free installation.

**OMEGA XMER Moulded Case Range** 8-24



OMEGA XMER CT's are square type and encapsulated with UL94V-0 approved polycarbonate. These metering CT's feature sealable terminal covers and a wide range of primary current ratings. Available in various, Bus bar sizes, case widths, and mounting options.

**OMEGA Split Core**
Omega 10 25-27



OMEGA 10 (Split Core CT's) Omega series split core transformers offer a cost effective and efficient method by which the current can be measured without the need to break the conductor, thereby reducing installation and commissioning time.

**XMER Moulded Case Range**
XMER Class 0.25 28-38



OMEGA XMER CT's are square type and encapsulated with UL94V-0 approved polycarbonate. These metering CT's feature sealable terminal covers and a wide range of primary current ratings for use of tariff metering. Available in various, Bus bar sizes, case widths, and mounting options.

**OMEGA Ring Type**
Omega 20 (TW CT's) 39-42



OMEGA 20 (TW CT's) Sifam Tinsley's Omega TW series round type CT's are housed in robust case with classical finish. The case is made of polycarbonate, which is flame retardant and non-drip and confirms to international regulations UL 94 V-0.

**OMEGA Ansi Type** 43-52

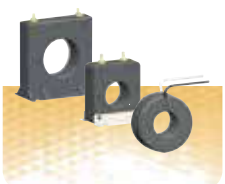

The ANSI metering class transformers are intended for power monitoring applications where high accuracy and minimum phase angle error are required. They are specially designed to be compliant with relevant ANSI standards.

**LTRC Series - Resin Cast** 53-54



LTRC Series – Resin Cast CT's are Epoxy Resin type with Insulation Class E (120°C). These LV metering CT's feature sealable terminal covers and primary current ratings from 100A to 1200A. Available in various, Bus bar sizes, case widths, and with foot mounting facility.


**View our full range online**
**www.sifamtinsley.co.uk**

# Current Transformers Range

Current Transformers Range

**Applications**

- Switchgear
- Distribution systems
- Generator sets
- Control panels
- Energy management
- Building management
- Utility power monitoring
- Process control
- Motor control

Sifam Tinsley offers an extensive range of single phase and three phase current transformers providing a vast array of system primary ratings, apertures, model variants and accuracies to the industry's standards in-order to suit every applications need.

Moulded case Measuring and Protection, Toroidal, Summation, Core balanced, Resin Cast, Split core, 3 Phase Moulded Case and high accuracy (Class 0.2S) Moulded case for tariff metering.



## Polycarbonate case having UL 94 V-0

Sifam Tinsley's CTs are housed in robust case with classical finish. The case is made of polycarbonate, which is flame retardant and non-drip and confirms to international regulations UL 94 V-0. Polycarbonate is a very tough and light weight engineering plastic material which has got the best mechanical properties very close to a metallic housing.

## Some important terms used in CTs

**Current error (Ratio error) :-** The error with a transformer introduces into the measurement of current and which arises from the fact that actual transformation ratio is not equal to the rated transformation ratio.

**Phase Displacement :-** The difference in phase between the primary and secondary current vectors, the direction of the vectors being so chosen that the angle is zero for the perfect transformer. The phase displacement is said to be positive when the secondary current vector leads the primary current vector. It is usually expressed in minutes.

**Composite error :-** Composite error is the resulting limitation of the harmonic content of the secondary current which is necessary for the correct operation of certain types of relays.

**Accuracy Class :-** A designation assigned to a current transformer the errors of which remain within specified limit under prescribed conditions of use.

**Rated Burden :-** The impedance of the secondary circuit on which the accuracy requirements are based. It is usually expressed as apparent power (in VA), at the rated secondary current and at a specified power factor.

**Rated Output :-** The value of the apparent power (in volt-amperes at a specified power factor) which the current transformer is intended to supply to the secondary circuit at the rated secondary current and with rated burden connected to it.

**Features given vary from product to product - for more detailed product specific info please visit our website www.sifamtinsley.co.uk**

**Highest System Voltage :-** The highest rms line to line voltage which can be sustained under normal operating conditions at any time and at any point on the system. It excludes temporary voltage variations due to fault condition and the sudden disconnection of large loads.

**Rated Insulation level :-** That combination of voltage values (power frequency and lightning impulse, or where applicable, lightning and switching impulse) which characterizes the insulation of a transformer with regard to its capability to withstand by dielectric stresses. For low voltage transformer the test voltage 4kV, at power-frequency, applied during 1 minute.

**Rated short time thermal current (with) :-** The rms value of the primary current which the current transformer will withstand for a rated time, with their secondary winding short circuited without suffering harmful effects.

**Rated dynamic current (Idyn) :-** The peak value of the primary current which a current transformer will withstand, without being damaged electrically for mechanically by the resulting electromagnetic forces, the secondary winding being short-circuited.

**Rated continuous thermal current :-** The value of current which can be permitted to flow continuously in the primary winding, the secondary windings being connected to the rated burdens, without the temperature rise exceeding the specified values.

**Instrument Security Factor (ISF) :-** The ratio of rated instrument limit primary current to the rated primary current. The times that the primary current must be higher then the rated value, for the composite error of a measuring current transformer to be equal to or greater than 10%, the secondary burden being equal to the rated burden. The lower this number is, the more protected the connected instrument are against.

## Approvals

## Wiring Diagram

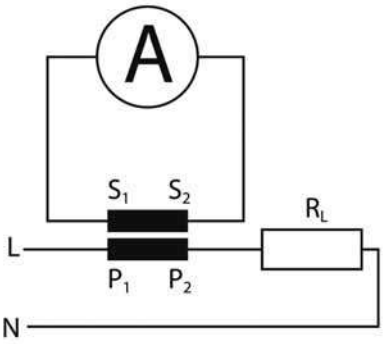


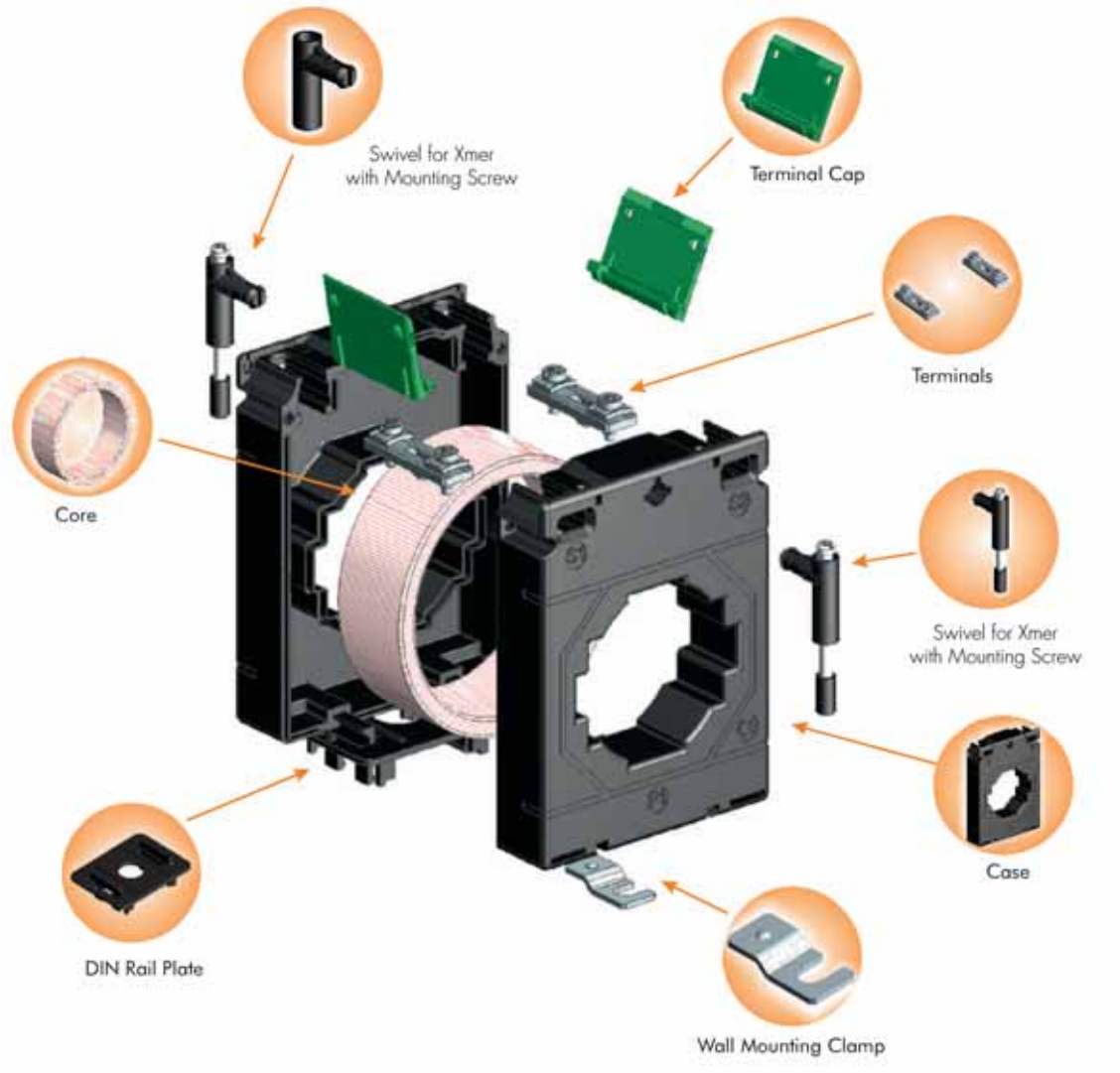

# OMEGA 3 Phase

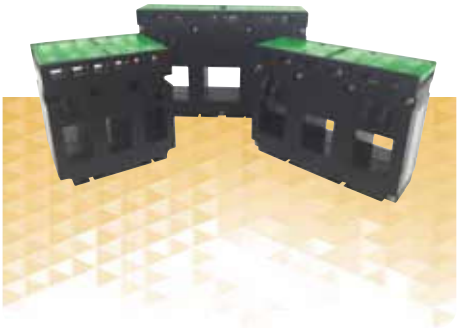

Three phase measuring current transformers suitable for primary ranges from 60A to 630A with 5A secondary. Allowing installations directly next to the moulded case circuit breakers for greater speed of installation and optimisation of space. Applicable to MCCB such as Manufacturers: ABB, Hager, Dorman Smith, Schneider, Terasaki, Merlin Gerlin, Chint, Legrand plus many more.

OMEGA 3 Phase

### Features

- Wire sealable terminal covers
- Cost effective 3 phase case design
- Various mounting option, Din rail, Busbar or Base mounting
- Secondary terminals combined slot/posi M4 Screws
- Case Material Self-extinguishing classification VO according to UL-94.

## Specifications

High quality 3 Phase Current Transformers

- System voltage 720V 50-60Hz
- Primary currents 60 to 630 Amps AC
- Test voltage 3kV for 1 minute
- Thermal short circuit current (Ith) 60 x In
- Dynamic short circuit current (Idyn) 2.55 x Ith
- Flame retardant polycarbonate UL94V-0
- International standards IEC/EN 60044-1 / IEC 61869-1, IEC 61010-2
- DIN rail, bus bar or base mounting
- 3 sizes: 15 x 25mm, 21 x 25mm & 31 x 31mm apertures
- Cable apertures from 15.5mm to 31mm
- Accuracy Class 1

# XN25

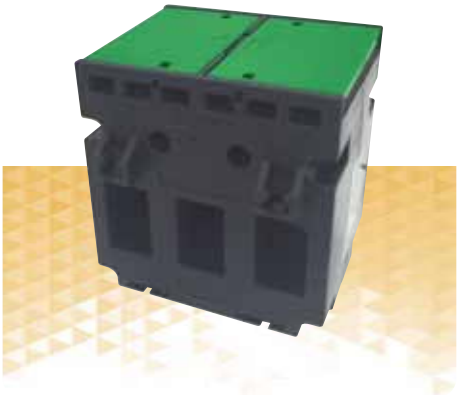

| Part Number | CT Ratio | Weight kgs | VA Class 1 | Dimensions |
|---|---|---|---|---|
| XN25-145011S 000000 | 60/5A | 0.6 | 1 | 3 x (15 x 25mm) width 76mm |
| XN25-185031S 000000 | 100/5A | 0.6 | 1.5 | 3 x (15 x 25mm) width 76mm |
| XN25-205031S 000000 | 125/5A | 0.6 | 1.5 | 3 x (15 x 25mm) width 76mm |
| XN25-225031S 000000 | 150/5A | 0.6 | 1.5 | 3 x (15 x 25mm) width 76mm |
| XN25-235031S 000000 | 160/5A | 0.6 | 1.5 | 3 x (15 x 25mm) width 76mm |

## Dimensions

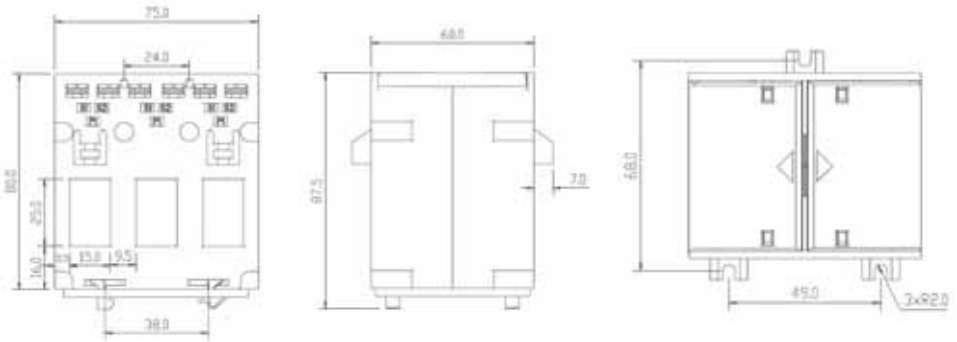

All dimensions are in mm

**Features given vary from product to product - for more detailed product specific info please visit our website www.sifamtinsley.co.uk**

# XN35

| Part Number | CT Ratio | Weight kgs | VA Class 1 | Dimensions |
|---|---|---|---|---|
| XN35-145031S 000000 | 60/5A | 0.4 | 1.5 | 3 x (21 x 25 mm) width 105mm |
| XN35-185031S 000000 | 100/5A | 0.4 | 1.5 | 3 x (21 x 25 mm) width 105mm |
| XN35-205031S 000000 | 125/5A | 0.4 | 1.5 | 3 x (21 x 25 mm) width 105mm |
| XN35-225031S 000000 | 150/5A | 0.4 | 1.5 | 3 x (21 x 25 mm) width 105mm |
| XN35-235031S 000000 | 160/5A | 0.4 | 1.5 | 3 x (21 x 25 mm) width 105mm |
| XN35-245031S 000000 | 200/5A | 0.4 | 1.5 | 3 x (21 x 25 mm) width 105mm |
| XN35-275031S 000000 | 250/5A | 0.4 | 1.5 | 3 x (21 x 25 mm) width 105mm |



## Dimensions

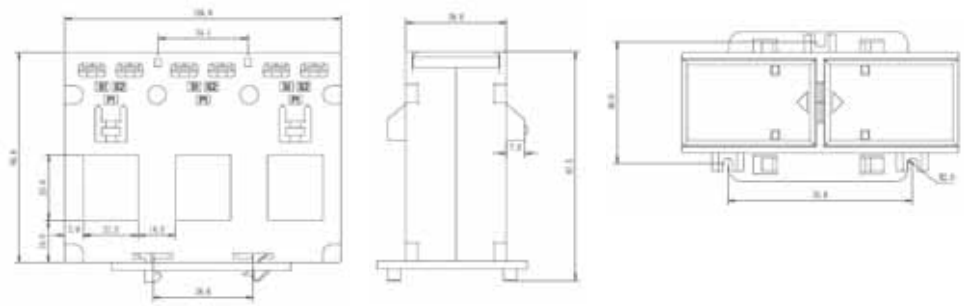

# XN45

| Part Number | CT Ratio | Weight kgs | VA Class 1 | Dimensions |
|---|---|---|---|---|
| XN45-275031S 000000 | 250/5A | 0.65 | 1.5 | 3 x (31 x 31 mm) width 141mm |
| XN45-285051S 000000 | 300/5A | 0.65 | 2.5 | 3 x (31 x 31 mm) width 141mm |
| XN45-315051S 000000 | 400/5A | 0.65 | 2.5 | 3 x (31 x 31 mm) width 141mm |
| XN45-325051S 000000 | 500/5A | 0.65 | 2.5 | 3 x (31 x 31 mm) width 141mm |
| XN45-335051S 000000 | 600/5A | 0.65 | 2.5 | 3 x (31 x 31 mm) width 141mm |
| XN45-345051S 000000 | 630/5A | 0.65 | 2.5 | 3 x (31 x 31 mm) width 141mm |

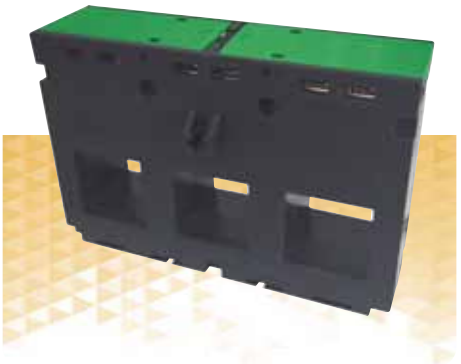

## Dimensions

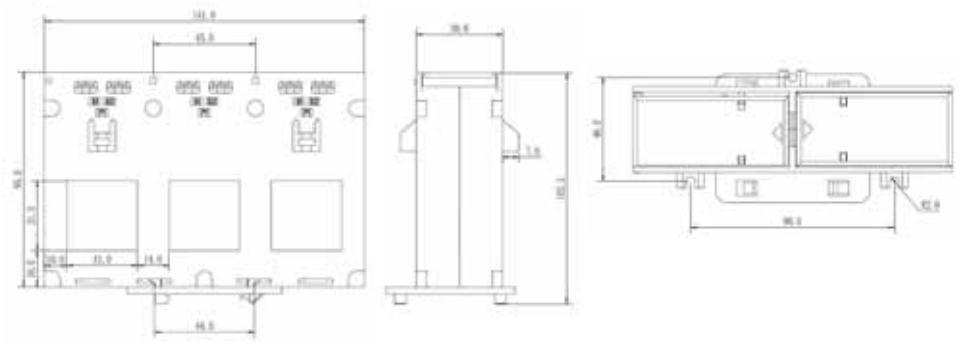

# Omega single and 3 Phase RJ12 Current Transformers



RJ12 Current

**Features**

- RJ12 Plug In Connection
- Multiple Sizes Available
- Simple, Error Free Connection
- CE Approved
- RJ12 Cable Included
- 100mA Secondary
- Fast and convenient way to connect current transformers via RJ12

## RJ12 Current Transformers

The 3-phase current transformer range is for use with the AP15-3DL, AP35 and ND20CT meters which combines three traditional current transformers in one moulding case with a RJ12 connection for simple and easy error free installation.

3 Phase current transformers can be directly installed next to a three-phase moulded case circuit breaker, thus saving installation time where fitting three standard individual current transformers would be required. In addition to the 3-phase current transformers, there is also a solid core single pole current transformer available for single phase applications. All 3 phase current transformers are supplied with a 1.5 metre connecting cable, with RJ12 connector termination at each end. Nominal rated secondary current 100mA AC RMS per phase.

## Specifications

| | |
|---|---|
| System Voltage | 720V maximum |
| Primary Input currents | 50-600A AC |
| Test Voltage | 3kV for 1 minute |
| System Frequency | 50Hz or 60Hz |
| Primary Ratings Secondary Output | 100mA AC RMS per Phase |
| Overload Withstand | 1.2x rated current continuously |
| Enclosure | Flame retardant grade classified UL94V-0 |
| Aperture Hole Centres (3-phase CTs only) | 25mm / 35mm / 45mm |
| Operating Temperature | -20°C to +85°C |
| Compliant | With Accuracy IEC/EN 60044-1 Class 0.5, Class 1 |

## Ordering

### RJ12 Single Phase Current Transformer

Case: 44mm wide x 45mm deep x 77.5mm high. Aperture 21.5mm diameter

| Part Number | RATIO | VA at CL0.5 | VA at CL1 |
|---|---|---|---|
| XJ12-132235S000000 | 50A/100mA | - | 0.25VA |
| XJ12-142235S000000 | 60A/100mA | - | 0.25VA |
| XJ12-182235S000000 | 100A/100mA | 0.25VA | 0.35VA |
| XJ12-202235S000000 | 125A/100mA | 0.25VA | 0.35VA |
| XJ12-222235S000000 | 150A/100mA | 0.25VA | 0.35VA |
| XJ12-232235S000000 | 160A/100mA | 0.25VA | 0.35VA |
| XJ12-242235S000000 | 200A/100mA | 0.25VA | 0.5VA |
| XJ12-272235S000000 | 250A/100mA | 0.25VA | 0.5VA |

## Dimensions

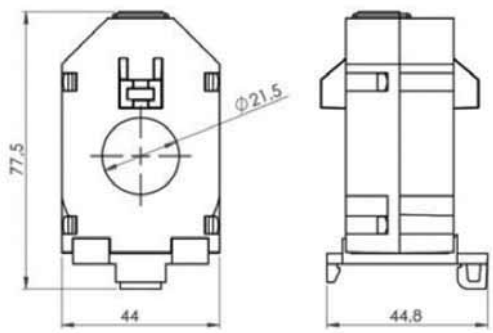


**Features given vary from product to product - for more detailed product specific info please visit our website www.sifamtinsley.co.uk**

## RJ12 Three Phase Current Transformer (25mm Centres)

Case: 76mm wide x 75.5mm deep x 80mm high. Aperture: 3 @ 15mm diameter

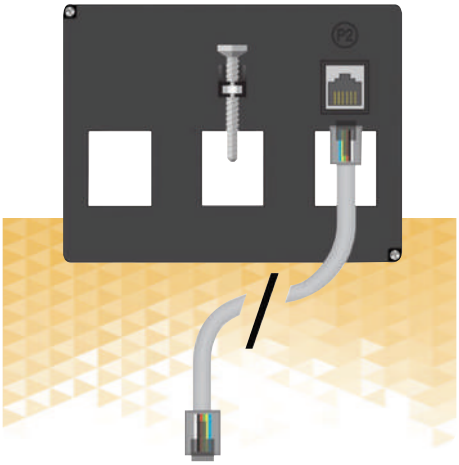

| Part Number | RATIO | VA at CL0.5 | VA at CL1 |
|---|---|---|---|
| XJ25-142231S000000 | 60A/100mA | - | 0.25VA |
| XJ25-182235S000000 | 100A/100mA | 0.25VA | 0.35VA |
| XJ25-202235S000000 | 125A/100mA | 0.25VA | 0.35VA |
| XJ25-222235S000000 | 150A/100mA | 0.25VA | 0.35VA |
| XJ25-232235S000000 | 160A/100mA | 0.25VA | 0.35VA |
| XJ25-242235S000000 | 200A/100mA | 0.25VA | 0.35VA |

### Dimensions

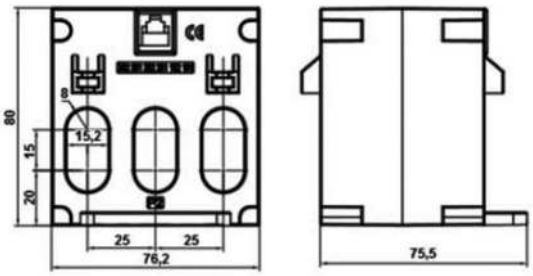


## RJ12 Three Phase Current Transformer (35mm Centres)

Case: 107mm wide x 49.5mm deep x 70mm high. Aperture 22 x 21mm

| Part Number | RATIO | VA at CL0.5 | VA at CL1 |
|---|---|---|---|
| XJ35-142231S000000 | 60A/100mA | - | 0.25VA |
| XJ35-182235S000000 | 100A/100mA | 0.25VA | 0.35VA |
| XJ35-202235S000000 | 125A/100mA | 0.25VA | 0.35VA |
| XJ35-222235S000000 | 150A/100mA | 0.25VA | 0.5VA |
| XJ35-232235S000000 | 160A/100mA | 0.25VA | 0.5VA |
| XJ35-242235S000000 | 200A/100mA | 0.25VA | 0.5VA |
| XJ35-272235S000000 | 250A/100mA | 0.25VA | 0.5VA |

### Dimensions

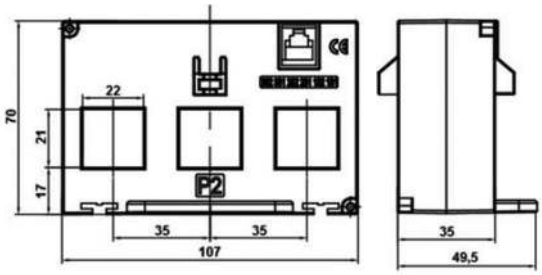


## RJ12 Three Phase Current Transformer (45mm Centres)

Case: 142mm wide x 52mm deep x 85mm high. Aperture 32 x 27mm

| Part Number | RATIO | VA at CL0.5 | VA at CL1 |
|---|---|---|---|
| XJ45-272235S000000 | 250A/100mA | 0.25VA | 0.5VA |
| XJ45-312235S000000 | 400A/100mA | 0.25VA | 0.5VA |
| XJ45-332235S000000 | 600A/100mA | 0.25VA | 0.5VA |

### Dimensions

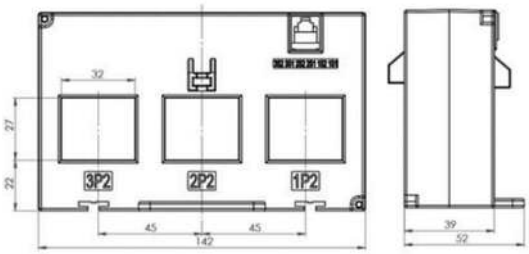

# OMEGA XMER



## OMEGA XMER

OMEGA XMER CT's are square type and encapsulated with UL94V-0 approved polycarbonate. These metering CT's feature sealable terminal covers and a wide range of primary current ratings. Available in various, Bus bar sizes, case widths, and mounting options.

OMEGA XMER

### Features

- Comprehensive class accuracy
- Cost effective moulded case current transformer
- Various mounting options including wall mounting, cable mounting, bus bar mounting and DIN rail mounting
- Available in 0.2 & 0.2s accuracy class
- Wire sealable terminal covers

## Specifications

- Primary current 5A to 7500A
- Secondary current 1A or 5A
- Accuracy class 0.5 and 1 (on request 0.2) and see page 26 for Class 0.2S
- Over current limiting factor FS5, FS10, FS15
- Rated frequency 50Hz or 60Hz
- Rated continuous thermal current (standard) 1,2 x in
- Rated short time thermal current with 60 x in, 1 s (Max 40kA)
- Rated isolation level 0.72/3 kV or 0.72/4 kV
- Altitude up to 2000 m
- Degree of protection IP20
- Degree of pollution 2
- Ambient temperature -5°C to + 55°C (0-95% relative humidity, non condensing!)
- Storage temperature -25°C to + 70°C
- Applied standards IEC 60044-1 / IEC 61869-1 : Performance, IEC - 61010 - 2 : Safety.

# LCTM 62/W



## LCTM 62/W (62mm wide x 40mm deep)

| Cat No. | Ratio | VA at CL 0.5 |
|---|---|---|
| XW01-045055S000000 | 5/5A | 2.5VA |
| XW01-065055S000000 | 10/5A | 2.5VA |
| XW01-075055S000000 | 15/5A | 2.5VA |
| XW01-085055S000000 | 20/5A | 2.5VA |
| XW01-105055S000000 | 30/5A | 2.5VA |

Primary Ratios available from 1A to 30A

| Cat No. | Ratio | VA at CL 1.0 |
|---|---|---|
| XW01-045081S000000 | 5/5A | 5VA |
| XW01-065081S000000 | 10/5A | 5VA |
| XW01-075081S000000 | 15/5A | 5VA |
| XW01-085081S000000 | 20/5A | 5VA |
| XW01-105081S000000 | 30/5A | 5VA |

Primary Ratios available from 1A to 30A

## Dimensions

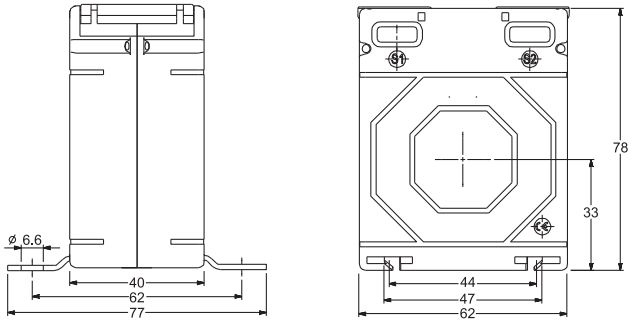


All dimensions are in mm.

NOTE: Please consult Sifam Tinsley on 1A secondary for availability.

**Features given vary from product to product - for more detailed product specific info please visit our website www.sifamtinsley.co.uk**

# LCTM 74/W

## LCTM 74/W (74mm wide x 45mm deep)

| Cat No. | Ratio | VA at CL 0.5 |
|---|---|---|
| XW02-045085S000000 | 5/5A | 5VA |
| XW02-065085S000000 | 10/5A | 5VA |
| XW02-075085S000000 | 15/5A | 5VA |
| XW02-085085S000000 | 20/5A | 5VA |
| XW02-105085S000000 | 30/5A | 5VA |
| XW02-115085S000000 | 40/5A | 5VA |
| XW02-135085S000000 | 50/5A | 5VA |
| XW02-145085S000000 | 60/5A | 5VA |

Primary Ratios available from 1A to 60A

| Cat No. | Ratio | VA at CL 1.0 |
|---|---|---|
| XW02-045111S000000 | 5/5A | 10VA |
| XW02-065111S000000 | 10/5A | 10VA |
| XW02-075111S000000 | 15/5A | 10VA |
| XW02-085111S000000 | 20/5A | 10VA |
| XW02-105111S000000 | 30/5A | 10VA |
| XW02-115111S000000 | 40/5A | 10VA |
| XW02-135111S000000 | 50/5A | 10VA |
| XW02-145111S000000 | 60/5A | 10VA |

Primary Ratios available from 1A to 60A

## Dimensions

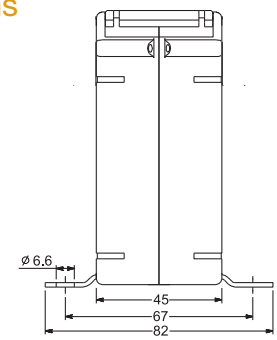


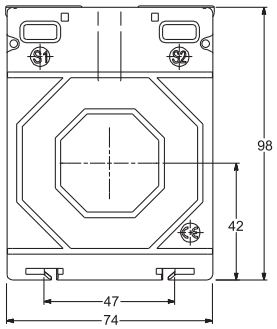


# LCTR 45/14

## LCTR 45/14 (45mm wide x 40mm deep x 14mm I.D.)

| Cat No. | Ratio | VA at CL 0.5 |
|---|---|---|
| XM01-175015S000000 | 80/5A | 1VA |
| XM01-185035S000000 | 100/5A | 1.5VA |
| XM01-205055S000000 | 125/5A | 2.5VA |
| XM01-225055S000000 | 150/5A | 2.5VA |
| XM01-245075S000000 | 200/5A | 3.75VA |
| XM01-275085S000000 | 250/5A | 5VA |
| XM01-285111S000000 | 300/5A | 10VA |

Primary Ratios available from 80A to 300A

| Cat No. | Ratio | VA at CL 1.0 |
|---|---|---|
| XM01-105011S000000 | 30/5A | 1VA |
| XM01-115011S000000 | 40/5A | 1VA |
| XM01-135031S000000 | 50/5A | 1.5VA |
| XM02-145031S000000 | 60/5A | 1.5VA |
| XM01-175051S000000 | 80/5A | 2.5VA |
| XM01-185071S000000 | 100/5A | 3.75VA |
| XM01-205071S000000 | 125/5A | 3.75VA |
| XM01-225081S000000 | 150/5A | 5VA |
| XM01-245101S000000 | 200/5A | 7.5VA |
| XM01-275101S000000 | 250/5A | 7.5VA |
| XM01-285081S000000 | 300/5A | 10VA |

Primary Ratios available from 30A to 300A



## Dimensions

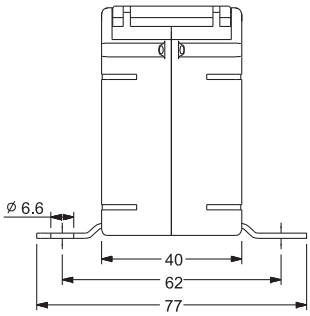


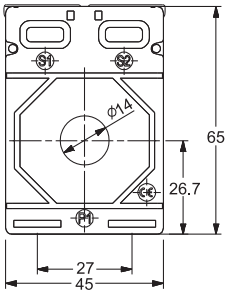


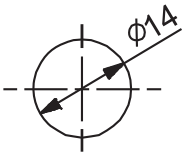

# LCTR 45/21



## LCTR 45/21 (45mm wide x 40mm deep x (21 x 10mm) I.D.)

| Cat No. | Ratio | VA at CL 0.5 |
|---|---|---|
| XM02-175015S000000 | 80/5A | 1VA |
| XM02-185035S000000 | 100/5A | 1.5VA |
| XM02-205055S000000 | 125/5A | 2.5VA |
| XM02-225055S000000 | 150/5A | 2.5VA |
| XM02-245075S000000 | 200/5A | 3.75VA |
| XM02-275075S000000 | 250/5A | 3.75VA |
| XM02-285085S000000 | 300/5A | 5VA |
| XM02-315085S000000 | 400/5A | 5VA |

Primary Ratios available from 80A to 400A

| Cat No. | Ratio | VA at CL 1.0 |
|---|---|---|
| XM02-135031S000000 | 50/5A | 1.5VA |
| XM02-145031S000000 | 60/5A | 1.5VA |
| XM02-175051S000000 | 80/5A | 2.5VA |
| XM02-185071S000000 | 100/5A | 3.75VA |
| XM02-205071S000000 | 125/5A | 3.75VA |
| XM02-225071S000000 | 150/5A | 3.75VA |
| XM02-245081S000000 | 200/5A | 5VA |
| XM02-275081S000000 | 250/5A | 5VA |
| XM02-285081S000000 | 300/5A | 5VA |
| XM02-315081S000000 | 400/5A | 5VA |

Primary Ratios available from 50A to 400A

### Dimensions

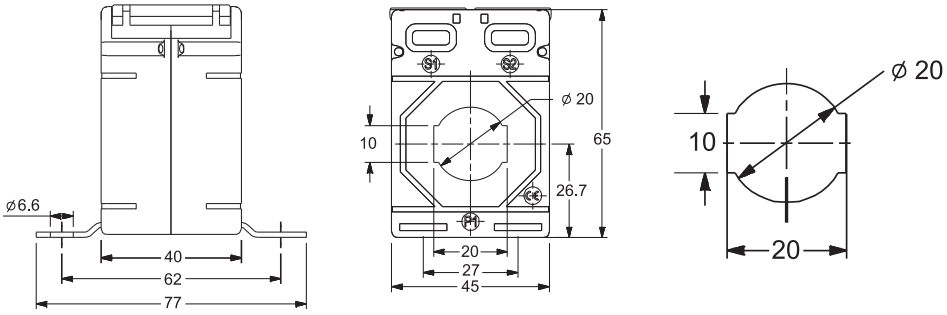


# LCTR 50/14 (30)



## LCTR 50/14 (50mm wide x 30mm deep x (14mm) I.D.)

| Cat No. | Ratio | VA at CL 0.5 |
|---|---|---|
| XM03-185055S000000 | 100/5A | 2.5VA |
| XM03-205055S000000 | 125/5A | 2.5VA |
| XM03-225075S000000 | 150/5A | 3.75VA |
| XM03-245075S000000 | 200/5A | 3.75VA |
| XM03-275085S000000 | 250/5A | 5VA |
| XM03-285105S000000 | 300/5A | 7.5VA |

Primary Ratios available from 100A to 300A

| Cat No. | Ratio | VA at CL 1.0 |
|---|---|---|
| XM03-115011S000000 | 40/5A | 1VA |
| XM03-135031S000000 | 50/5A | 1.5VA |
| XM03-145031S000000 | 60/5A | 1.5VA |
| XM03-175031S000000 | 80/5A | 1.5VA |
| XM03-185071S000000 | 100/5A | 3.75VA |
| XM03-205071S000000 | 125/5A | 3.75VA |
| XM03-225081S000000 | 150/5A | 5VA |
| XM03-245081S000000 | 200/5A | 5VA |
| XM03-275101S000000 | 250/5A | 7.5VA |
| XM03-285101S000000 | 300/5A | 7.5VA |

Primary Ratios available from 40A to 300A

### Dimensions

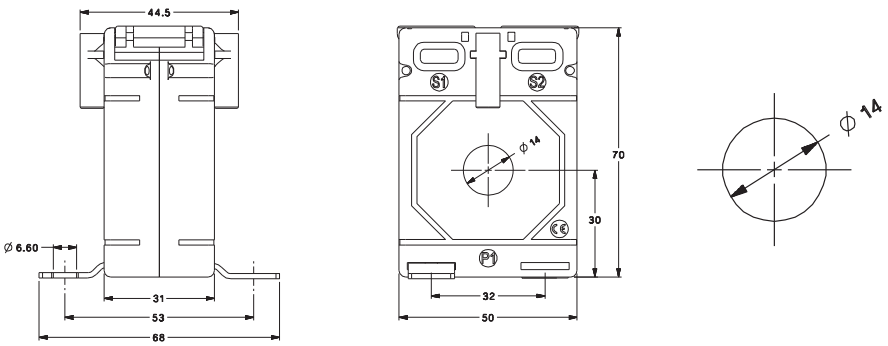


All dimensions are in mm.

NOTE: Please consult Sifam Tinsley on 1A secondary for availability.

**Features given vary from product to product - for more detailed product specific info please visit our website www.sifamtinsley.co.uk**

## LCTR 50/14 (50) (50mm wide x 50mm deep x (14mm) I.D.)

# LCTR 50/14 (50)

| Cat No. | Ratio | VA at CL 0.5 |
|---|---|---|
| XM04-135035S000000 | 50/5A | 1.5VA |
| XM04-145035S000000 | 60/5A | 1.5VA |
| XM04-175055S000000 | 80/5A | 2.5VA |
| XM04-185075S000000 | 100/5A | 3.75VA |
| XM04-205075S000000 | 125/5A | 3.75VA |
| XM04-225085S000000 | 150/5A | 5VA |
| XM04-245105S000000 | 200/5A | 7.5VA |
| XM04-275121S000000 | 250/5A | 12.5VA |
| XM04-285121S000000 | 300/5A | 12.5VA |

Primary Ratios available from 50A to 300A

| Cat No. | Ratio | VA at CL 1.0 |
|---|---|---|
| XM04-115011S000000 | 30/5A | 1VA |
| XM04-115011S000000 | 40/5A | 1VA |
| XM04-135031S000000 | 50/5A | 1.5VA |
| XM04-145031S000000 | 60/5A | 1.5VA |
| XM04-175081S000000 | 80/5A | 5VA |
| XM04-185081S000000 | 100/5A | 5VA |
| XM04-205081S000000 | 125/5A | 5VA |
| XM04-225101S000000 | 150/5A | 7.5VA |
| XM04-245111S000000 | 200/5A | 10VA |
| XM04-275111S000000 | 250/5A | 10VA |
| XM04-285111S000000 | 300/5A | 10VA |

Primary Ratios available from 30A to 300A



### Dimensions

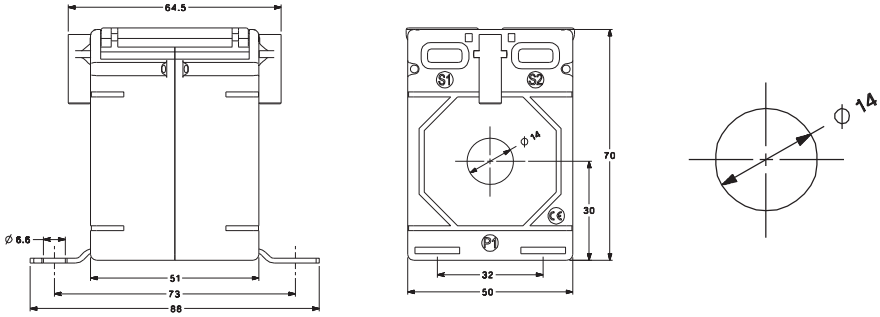


# LCTR 50/21 (30)

## LCTR 50/21 (30) (50mm wide x 30mm deep x (21 x 10mm) I.D.)

| Cat No. | Ratio | VA at CL 0.5 |
|---|---|---|
| XM05-175015S000000 | 80/5A | 1VA |
| XM05-185035S000000 | 100/5A | 1.5VA |
| XM05-205055S000000 | 125/5A | 2.5VA |
| XM05-225055S000000 | 150/5A | 2.5VA |
| XM05-245075S000000 | 200/5A | 3.75VA |
| XM05-275085S000000 | 250/5A | 5VA |
| XM05-285085S000000 | 300/5A | 5VA |
| XM05-315085S000000 | 400/5A | 5VA |

Primary Ratios available from 80A to 400A

| Cat No. | Ratio | VA at CL 1.0 |
|---|---|---|
| XM05-135011S000000 | 50/5A | 1VA |
| XM05-145011S000000 | 60/5A | 1VA |
| XM05-175051S000000 | 80/5A | 2.5VA |
| XM05-185051S000000 | 100/5A | 2.5VA |
| XM05-205071S000000 | 125/5A | 3.75VA |
| XM05-225081S000000 | 150/5A | 5VA |
| XM05-245081S000000 | 200/5A | 5VA |
| XM05-275085S000000 | 250/5A | 5VA |
| XM05-285101S000000 | 300/5A | 7.5VA |
| XM05-315101S000000 | 400/5A | 7.5VA |

Primary Ratios available from 50A to 400A



### Dimensions

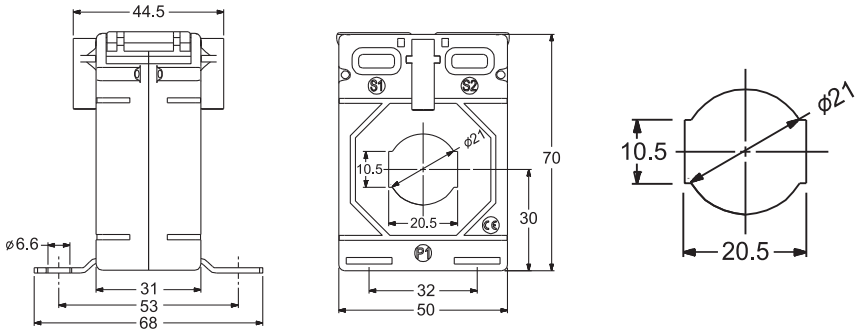

# LCTR 50/21 (50)



## LCTR 50/21 (50) (50mm wide x 50mm deep x (21 x 10mm) I.D.)

| Cat No. | Ratio | VA at CL 0.5 |
|---|---|---|
| XM06-135015S000000 | 50/5A | 1VA |
| XM06-145015S000000 | 60/5A | 1VA |
| XM06-175055S000000 | 80/5A | 2.5VA |
| XM06-185055S000000 | 100/5A | 2.5VA |
| XM06-205085S000000 | 125/5A | 5VA |
| XM06-225085S000000 | 150/5A | 5VA |
| XM06-245105S000000 | 200/5A | 7.5VA |
| XM06-275105S000000 | 250/5A | 7.5VA |
| XM06-285105S000000 | 300/5A | 7.5VA |
| XM06-315115S000000 | 400/5A | 10VA |

Primary Ratios available from 50A to 400A

| Cat No. | Ratio | VA at CL 1.0 |
|---|---|---|
| XM06-145051S000000 | 60/5A | 2.5VA |
| XM06-175071S000000 | 80/5A | 5VA |
| XM06-185071S000000 | 100/5A | 5VA |
| XM06-205071S000000 | 125/5A | 5VA |
| XM06-225111S000000 | 150/5A | 10VA |
| XM06-245111S000000 | 200/5A | 10VA |
| XM06-275115S000000 | 250/5A | 10VA |
| XM06-285121S000000 | 300/5A | 12.5VA |
| XM06-315131S000000 | 400/5A | 15VA |

Primary Ratios available from 60A to 400A

## Dimensions

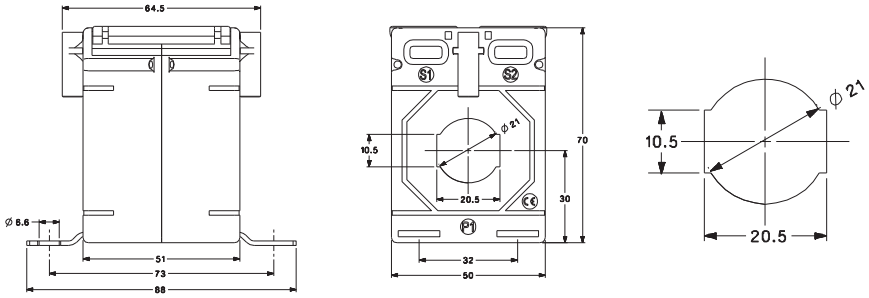


# LCTB 50/30 (30)



## LCTB 50/30 (30) (50mm wide x 30mm deep x (30 x 10mm) I.D.)

| Cat No. | Ratio | VA at CL 0.5 |
|---|---|---|
| XM07-185015S000000 | 100/5A | 1VA |
| XM07-205015S000000 | 125/5A | 1VA |
| XM07-225055S000000 | 150/5A | 2.5VA |
| XM07-245055S000000 | 200/5A | 2.5VA |
| XM07-275081S000000 | 250/5A | 5VA |
| XM07-285085S000000 | 300/5A | 5VA |
| XM07-315085S000000 | 400/5A | 5VA |
| XM07-325085S000000 | 500/5A | 5VA |
| XM07-335085S000000 | 600/5A | 5VA |

Primary Ratios available from 100A to 600A

| Cat No. | Ratio | VA at CL 1.0 |
|---|---|---|
| XM07-175031S000000 | 80/5A | 1.5VA |
| XM07-185051S000000 | 100/5A | 2.5VA |
| XM07-205051S000000 | 125/5A | 2.5VA |
| XM07-225071S000000 | 150/5A | 3.75VA |
| XM07-245081S000000 | 200/5A | 5VA |
| XM07-275081S000000 | 250/5A | 5VA |
| XM07-285081S000000 | 300/5A | 5VA |
| XM07-315091S000000 | 400/5A | 6.25VA |
| XM07-325091S000000 | 500/5A | 6.25VA |
| XM07-335101S000000 | 600/5A | 7.5VA |

## Dimensions

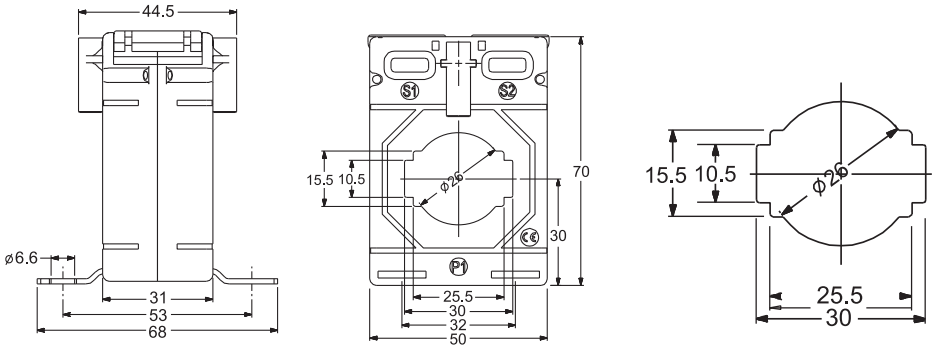


All dimensions are in mm.

NOTE: Please consult Sifam Tinsley on 1A secondary for availability.

**Features given vary from product to product - for more detailed product specific info please visit our website www.sifamtinsley.co.uk**

## LCTB 50/30 (50) (50mm wide x 50mm deep x (30 x 30mm) I.D.)

# LCTB 50/30 (50)

| Cat No. | Ratio | VA at CL 0.5 |
|---|---|---|
| XM08-185055S000000 | 100/5A | 2.5VA |
| XM08-205055S000000 | 125/5A | 2.5VA |
| XM08-22505S000000 | 150/5A | 5VA |
| XM08-2450855S000000 | 200/5A | 5VA |
| XM08-275085S000000 | 250/5A | 5VA |
| XM08-285085S000000 | 300/5A | 5VA |
| XM08-315115S000000 | 400/5A | 10VA |
| XM08-325115S000000 | 500/5A | 10VA |
| XM08-335115S000000 | 600/5A | 10VA |

Primary Ratios available from 100A to 600A

| Cat No. | Ratio | VA at CL 1.0 |
|---|---|---|
| XM08-175051S000000 | 80/5A | 2.5VA |
| XM08-185081S000000 | 100/5A | 5VA |
| XM08-205081S000000 | 125/5A | 5VA |
| XM08-225081S000000 | 150/5A | 5VA |
| XM08-245101S000000 | 200/5A | 7.5VA |
| XM08-275111S000000 | 250/5A | 10VA |
| XM08-285111S000000 | 300/5A | 10VA |
| XM08-315121S000000 | 400/5A | 12.5VA |
| XM08-325121S000000 | 500/5A | 12.5VA |
| XM08-335131S000000 | 600/5A | 15VA |

Primary Ratios available from 50A to 600A



## Dimensions

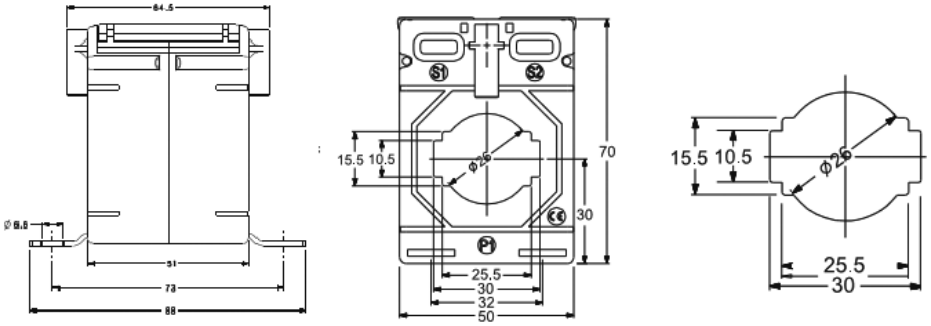


## LCTB 62R (62mm Wide x 40mm deep x (22.5mm) I.D.)

# LCTB 62R

| Cat No. | Ratio | VA at CL 0.5 |
|---|---|---|
| XM09-185055S000000 | 100/5A | 2.5VA |
| XM09-205075S000000 | 125/5A | 3.75VA |
| XM09-225085S000000 | 150/5A | 5VA |
| XM09-245105S000000 | 200/5A | 7.5VA |
| XM09-275115S000000 | 250/5A | 10VA |
| XM09-285115S000000 | 300/5A | 10VA |
| XM09-315135S000000 | 400/5A | 15VA |
| XM09-325135S000000 | 500/5A | 15VA |
| XM09-335135S000000 | 600/5A | 15VA |

Primary Ratios available from 100A to 600A

| Cat No. | Ratio | VA at CL 1.0 |
|---|---|---|
| XM09-135021S000000 | 50/5A | 1.5VA |
| XM09-145051S000000 | 60/5A | 2.5VA |
| XM09-175051S000000 | 80/5A | 2.5VA |
| XM09-185081S000000 | 100/5A | 5VA |
| XM09-205081S000000 | 125/5A | 5VA |
| XM09-225101S000000 | 150/5A | 7.5VA |
| XM09-245111S000000 | 200/5A | 10VA |
| XM09-275131S000000 | 250/5A | 15VA |
| XM09-285131S000000 | 300/5A | 15VA |
| XM09-315131S000000 | 400/5A | 15VA |
| XM09-325131S000000 | 500/5A | 15VA |
| XM09-335131S000000 | 600/5A | 15VA |

Primary Ratios available from 50A to 600A



## Dimensions

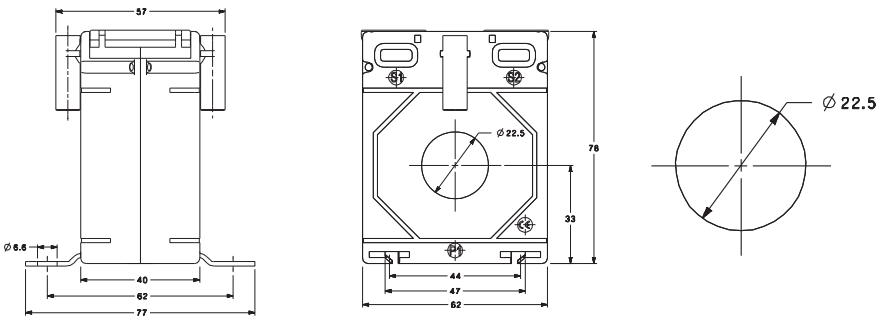

# LCTB 62/20



**Note: Model available in Class 0.2S please refer to page 26**

## LCTB 62/20 (62mm Wide x 40mm deep x (20.5x20.5mm) I.D.)

| Cat No. | Ratio | VA at CL 0.5 |
|---|---|---|
| XM10-175035S000000 | 80/5A | 1.5VA |
| XM10-185055S000000 | 100/5A | 2.5VA |
| XM10-205075S000000 | 125/5A | 3.75VA |
| XM10-225085S000000 | 150/5A | 5VA |
| XM10-245105S000000 | 200/5A | 7.5VA |
| XM10-275115S000000 | 250/5A | 10VA |
| XM10-285115S000000 | 300/5A | 10VA |
| XM10-315135S000000 | 400/5A | 15VA |

Primary Ratios available from 80A to 400A

| Cat No. | Ratio | VA at CL 1.0 |
|---|---|---|
| XM10-135031S000000 | 50/5A | 1.5VA |
| XM10-145051S000000 | 60/5A | 2.5VA |
| XM10-175071S000000 | 80/5A | 3.75VA |
| XM10-185081S000000 | 100/5A | 5VA |
| XM10-205081S000000 | 125/5A | 5VA |
| XM10-225101S000000 | 150/5A | 7.5VA |
| XM10-245111S000000 | 200/5A | 10VA |
| XM10-275131S000000 | 250/5A | 15VA |
| XM10-285131S000000 | 300/5A | 15VA |
| XM10-315131S000000 | 400/5A | 15VA |

Primary Ratios available from 50A to 400A

## Dimensions

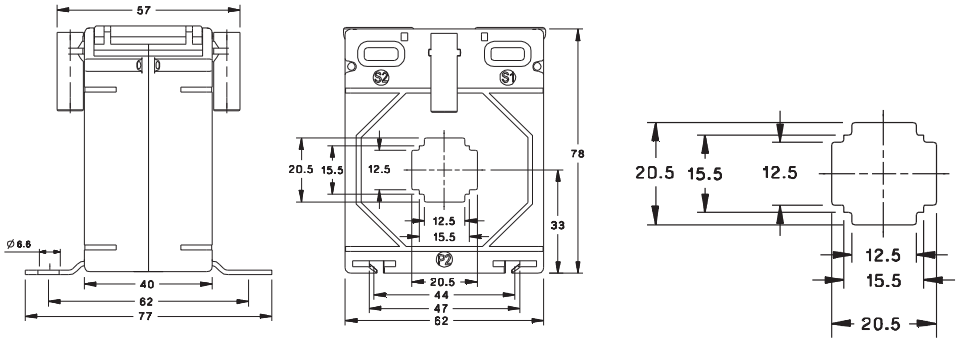


# LCTB 62/30



**Note: Model available in Class 0.2S please refer to page 27**

## LCTB 62/30 (62mm Wide x 40mm deep x (30 x 11mm) I.D.)

| Cat No. | Ratio | VA at CL 0.5 |
|---|---|---|
| XM11-185035S000000 | 100/5A | 1.5VA |
| XM11-205055S000000 | 125/5A | 2.5VA |
| XM11-225075S000000 | 150/5A | 3.75VA |
| XM11-245085S000000 | 200/5A | 5VA |
| XM11-275085S000000 | 250/5A | 5VA |
| XM11-285085S000000 | 300/5A | 5VA |
| XM11-315105S000000 | 400/5A | 7.5VA |
| XM11-325115S000000 | 500/5A | 10VA |
| XM11-335135S000000 | 600/5A | 15VA |
| XM11-335135S000000 | 750/5A | 15VA |
| XM11-335135S000000 | 800/5A | 15VA |

Primary Ratios available from 100A to 800A

| Cat No. | Ratio | VA at CL 1.0 |
|---|---|---|
| XM11-185051S000000 | 100/5A | 2.5VA |
| XM11-205071S000000 | 125/5A | 3.75VA |
| XM11-225081S000000 | 150/5A | 5VA |
| XM11-245101S000000 | 200/5A | 7.5VA |
| XM11-275101S000000 | 250/5A | 7.5VA |
| XM11-285111S000000 | 300/5A | 10VA |
| XM11-315121S000000 | 400/5A | 12.5VA |
| XM11-325121S000000 | 500/5A | 12.5VA |
| XM11-335131S000000 | 600/5A | 15VA |

Primary Ratios available from 100A to 800A

## Dimensions

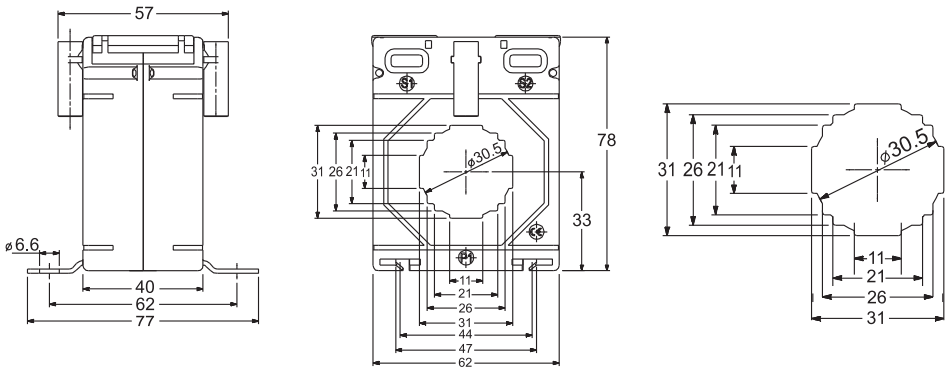


All dimensions are in mm.

NOTE: Please consult Sifam Tinsley on 1A secondary for availability.

**Features given vary from product to product - for more detailed product specific info please visit our website www.sifamtinsley.co.uk**

## LCTB 62/30 (50) (62mm wide x 50mm deep x (30 x 11mm) I.D.)

| Cat No. | Ratio | VA at CL 0.5 |
|---|---|---|
| XM12-185085S000000 | 100/5A | 5VA |
| XM12-205085S000000 | 125/5A | 5VA |
| XM12-225085S000000 | 150/5A | 5VA |
| XM12-245115S000000 | 200/5A | 10VA |
| XM12-275135S000000 | 250/5A | 15VA |
| XM12-285135S000000 | 300/5A | 15VA |
| XM12-315135S000000 | 400/5A | 15VA |
| XM12-325135S000000 | 500/5A | 15VA |
| XM12-335145S000000 | 600/5A | 20VA |
| XM12-365145S000000 | 750/5A | 20VA |
| XM12-375145S000000 | 800/5A | 20VA |

Primary Ratios available from 100A to 800A

| Cat No. | Ratio | VA at CL 1.0 |
|---|---|---|
| XM12-185081S000000 | 100/5A | 5VA |
| XM12-205081S000000 | 125/5A | 5VA |
| XM12-225101S000000 | 150/5A | 7.5VA |
| XM12-245131S000000 | 200/5A | 15VA |
| XM12-275131S000000 | 250/5A | 15VA |
| XM12-285131S000000 | 300/5A | 15VA |
| XM12-315151S000000 | 400/5A | 30VA |
| XM12-325151S000000 | 500/5A | 30VA |
| XM12-335151S000000 | 600/5A | 30VA |
| XM12-365151S000000 | 750/5A | 30VA |
| XM12-375151S000000 | 800/5A | 30VA |

Primary Ratios available from 40A to 800A

## Dimensions

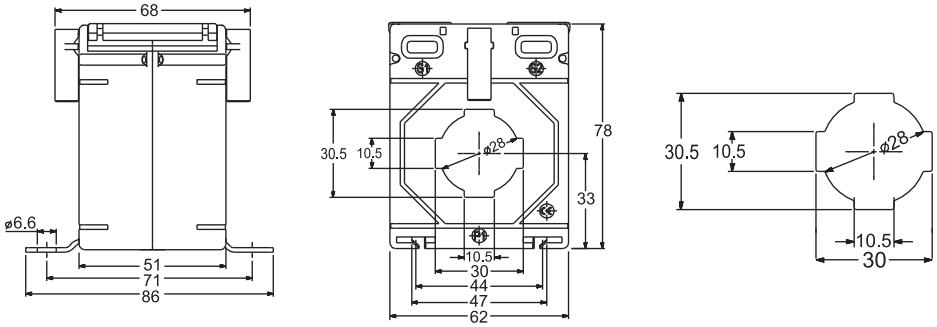


# LCTB 62/30 (50)



**Note: Model available in Class 0.2S please refer to page 27**

# LCTB 62/40



**Note: Model available in Class 0.2S please refer to page 28**

## LCTB 62/40 (62mm wide x 40mm deep x (40 x 11mm) I.D.)

| Cat No. | Ratio | VA at CL 0.5 |
|---|---|---|
| XM13-245035S000000 | 200/5A | 1.5VA |
| XM13-275055S000000 | 250/5A | 2.5VA |
| XM13-285085S000000 | 300/5A | 5VA |
| XM13-315085S000000 | 400/5A | 5VA |
| XM13-325085S000000 | 500/5A | 5VA |
| XM13-335105S000000 | 600/5A | 7.5VA |
| XM13-365115S000000 | 750/5A | 10VA |
| XM13-375115S000000 | 800/5A | 10VA |

Primary Ratios available from 200A to 800A

| Cat No. | Ratio | VA at CL 1.0 |
|---|---|---|
| XM13-185011S000000 | 100/5A | 1VA |
| XM13-205031S000000 | 125/5A | 1.5VA |
| XM13-225051S000000 | 150/5A | 2.5VA |
| XM13-245071S000000 | 200/5A | 3.75VA |
| XM13-275081S000000 | 250/5A | 5VA |
| XM13-285081S000000 | 300/5A | 5VA |
| XM13-315081S000000 | 400/5A | 5VA |
| XM13-325101S000000 | 500/5A | 7.5VA |
| XM13-335111S000000 | 600/5A | 10VA |
| XM13-365111S000000 | 750/5A | 10VA |
| XM13-375111S000000 | 800/5A | 10VA |

Primary Ratios available from 100A to 800A

## Dimensions

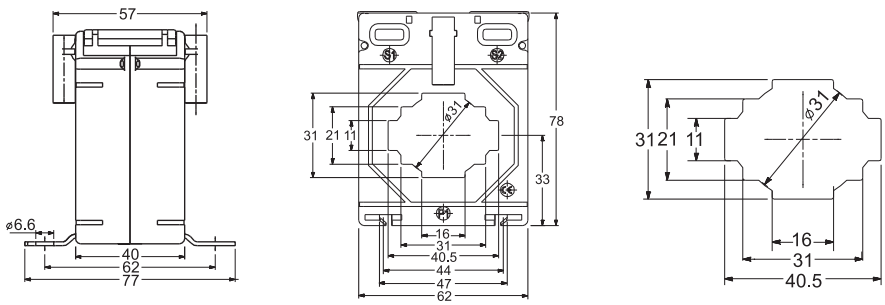

# LCTB 74/20



**Note: Model available in Class 0.2S please refer to page 28**

## LCTB 74/20 (74mm wide x 45mm deep x (20.4mm) I.D.)

| Cat No. | Ratio | VA at CL 0.5 |
|---|---|---|
| XM14-185085S000000 | 100/5A | 5VA |
| XM14-205085S000000 | 125/5A | 5VA |
| XM14-225105S000000 | 150/5A | 7.5VA |
| XM14-245115S000000 | 200/5A | 10VA |
| XM14-275115S000000 | 250/5A | 10VA |
| XM14-285135S000000 | 300/5A | 15VA |
| XM14-315135S000000 | 400/5A | 15VA |

Primary Ratios available from 80A to 400A

| Cat No. | Ratio | VA at CL 1.0 |
|---|---|---|
| XM14-185101S000000 | 100/5A | 7.5VA |
| XM14-205111S000000 | 125/5A | 10VA |
| XM14-225121S000000 | 150/5A | 12.5VA |
| XM14-245131S000000 | 200/5A | 15VA |
| XM14-275131S000000 | 250/5A | 15VA |
| XM14-285131S000000 | 300/5A | 15VA |
| XM14-315141S000000 | 400/5A | 20VA |

Primary Ratios available from 50A to 400A

## Dimensions

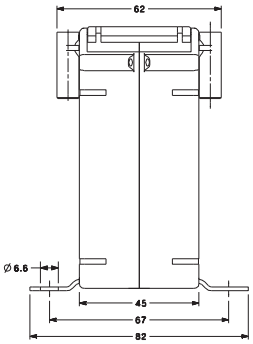


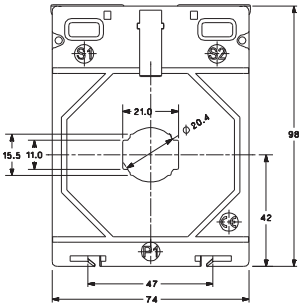


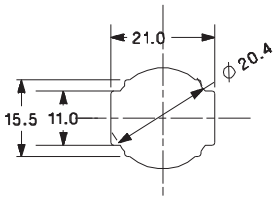


# LCTB 74/30



**Note: Model available in Class 0.2S please refer to page 29**

## LCTB 74/30 (74mm wide x 45mm deep x (31x31mm) I.D.)

| Cat No. | Ratio | VA at CL 0.5 |
|---|---|---|
| XM15-185055S000000 | 100/5A | 2.5VA |
| XM15-205055S000000 | 125/5A | 2.5VA |
| XM15-225085S000000 | 150/5A | 5VA |
| XM15-245115S000000 | 200/5A | 10VA |
| XM15-275115S000000 | 250/5A | 10VA |
| XM15-285115S000000 | 300/5A | 10VA |
| XM15-315135S000000 | 400/5A | 15VA |
| XM15-325135S000000 | 500/5A | 15VA |
| XM15-335135S000000 | 600/5A | 15VA |
| XM15-365145S000000 | 750/5A | 20VA |
| XM15-375155S000000 | 800/5A | 30VA |

Primary Ratios available from 80A to 800A

| Cat No. | Ratio | VA at CL 1.0 |
|---|---|---|
| XM15-185081S000000 | 100/5A | 5VA |
| XM15-205081S000000 | 125/5A | 5VA |
| XM15-225101S000000 | 150/5A | 7.5VA |
| XM15-245131S000000 | 200/5A | 15VA |
| XM15-275131S000000 | 250/5A | 15VA |
| XM15-285131S000000 | 300/5A | 15VA |
| XM15-315141S000000 | 400/5A | 20VA |
| XM15-325141S000000 | 500/5A | 20VA |
| XM15-335141S000000 | 600/5A | 20VA |
| XM15-365151S000000 | 750/5A | 30VA |
| XM15-375151S000000 | 800/5A | 30VA |

Primary Ratios available from 60A to 800A

## Dimensions

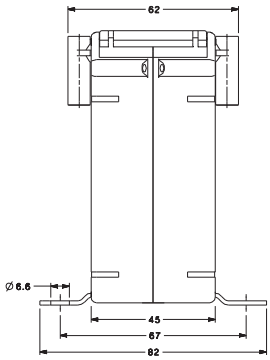


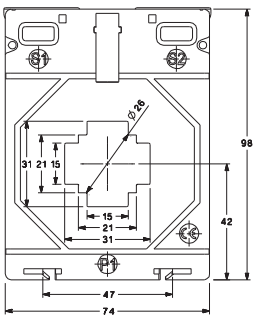


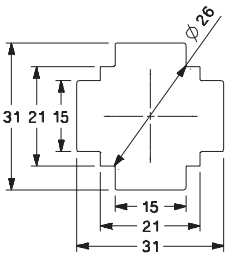


All dimensions are in mm.

NOTE: Please consult Sifam Tinsley on 1A secondary for availability.

**Features given vary from product to product - for more detailed product specific info please visit our website www.sifamtinsley.co.uk**

# LCTB 74/40

## LCTB 74/40 (74mm wide x 45mm deep x (41x41mm) I.D.)

| Cat No. | Ratio | VA at CL 0.5 |
|---|---|---|
| XM16-185035S000000 | 100/5A | 1.5VA |
| XM16-205035S000000 | 125/5A | 1.5VA |
| XM16-225055S000000 | 150/5A | 2.5VA |
| XM16-245075S000000 | 200/5A | 3.75VA |
| XM16-275085S000000 | 250/5A | 5VA |
| XM16-285085S000000 | 300/5A | 5VA |
| XM16-315105S000000 | 400/5A | 7.5VA |
| XM16-325115S000000 | 500/5A | 10VA |
| XM16-335135S000000 | 600/5A | 15VA |
| XM16-365135S000000 | 750/5A | 15VA |
| XM16-375135S000000 | 800/5A | 15VA |
| XM16-395135S000000 | 1000/5A | 15VA |

Primary Ratios available from 100A to 1000A

| Cat No. | Ratio | VA at CL 1.0 |
|---|---|---|
| XM16-185051S000000 | 100/5A | 2.5VA |
| XM16-205051S000000 | 125/5A | 2.5VA |
| XM16-225071S000000 | 150/5A | 3.75VA |
| XM16-245081S000000 | 200/5A | 5VA |
| XM16-275101S000000 | 250/5A | 7.5VA |
| XM16-285101S000000 | 300/5A | 7.5VA |
| XM16-315121S000000 | 400/5A | 12.5VA |
| XM16-325131S000000 | 500/5A | 15VA |
| XM16-335141S000000 | 600/5A | 20VA |
| XM16-365141S000000 | 750/5A | 20VA |
| XM16-375141S000000 | 800/5A | 20VA |
| XM16-395141S000000 | 1000/5A | 20VA |

Primary Ratios available from 40A to 1000A



**Note: Model available in Class 0.2S please refer to page 29**

## Dimensions

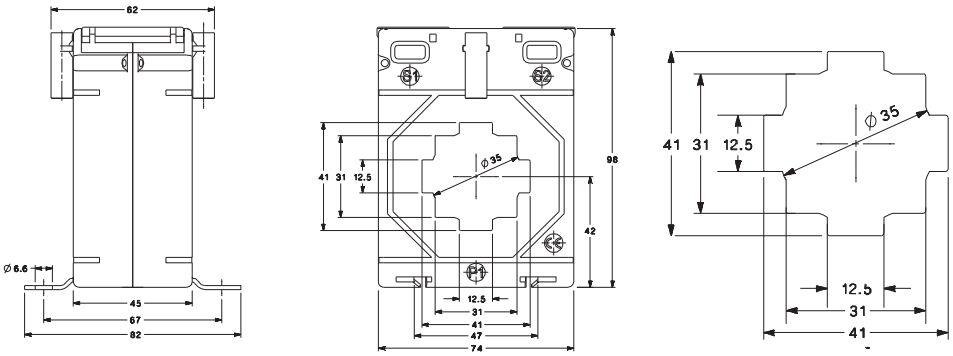


# LCTB 74/50

## LCTB 74/50 (74mm wide x 45mm deep x (50 x 12mm) I.D.)

| Cat No. | Ratio | VA at CL 0.5 |
|---|---|---|
| XM17-275055S000000 | 250/5A | 2.5VA |
| XM17-285085S000000 | 300/5A | 5VA |
| XM17-315085S000000 | 400/5A | 5VA |
| XM17-325105S000000 | 500/5A | 7.5VA |
| XM17-335115S000000 | 600/5A | 10VA |
| XM17-365125S000000 | 750/5A | 12.5VA |
| XM17-375125S000000 | 800/5A | 12.5VA |
| XM17-395125S000000 | 1000/5A | 12.5VA |

Primary Ratios available from 250A to 1000A

| Cat No. | Ratio | VA at CL 1.0 |
|---|---|---|
| XM17-185031S000000 | 100/5A | 1.5VA |
| XM17-205031S000000 | 125/5A | 1.5VA |
| XM17-225051S000000 | 150/5A | 2.5VA |
| XM17-245071S000000 | 200/5A | 3.75VA |
| XM17-275081S000000 | 250/5A | 5VA |
| XM17-285101S000000 | 300/5A | 7.5VA |
| XM17-315101S000000 | 400/5A | 7.5VA |
| XM17-325111S000000 | 500/5A | 10VA |
| XM17-335121S000000 | 600/5A | 12.5VA |
| XM17-365131S000000 | 750/5A | 15VA |
| XM17-375131S000000 | 800/5A | 15VA |
| XM17-395131S000000 | 1000/5A | 15VA |

Primary Ratios available from 100A to 1000A



**Note: Model available in Class 0.2S please refer to page 30**

## Dimensions

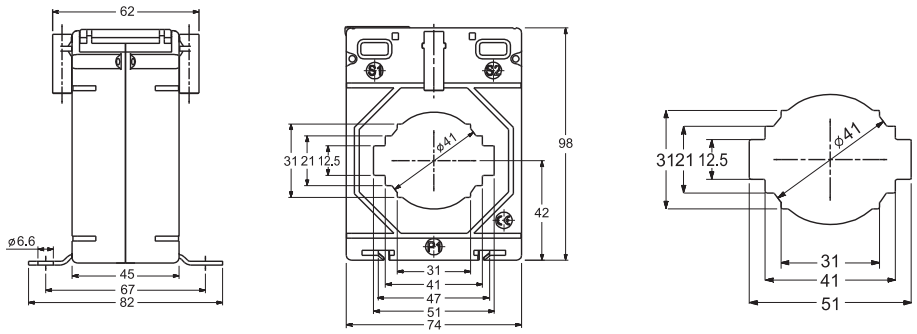

# LCTB 86/40



**Note: Model available in Class 0.2S please refer to page 30**

## LCTB 86/40 (86mm wide x 45mm deep x (41 x 41mm) I.D.)

| Cat No. | Ratio | VA at CL 0.5 |
|---|---|---|
| XM18-185035S000000 | 100/5A | 1.5VA |
| XM18-205055S000000 | 125/5A | 2.5VA |
| XM18-225075S000000 | 150/5A | 3.75VA |
| XM18-245085S000000 | 200/5A | 5VA |
| XM18-275105S000000 | 250/5A | 7.5VA |
| XM18-285115S000000 | 300/5A | 10VA |
| XM18-315135S000000 | 400/5A | 15VA |
| XM18-325145S000000 | 500/5A | 20VA |
| XM18-335155S000000 | 600/5A | 30VA |
| XM18-365155S000000 | 750/5A | 30VA |
| XM18-375155S000000 | 800/5A | 30VA |
| XM18-395155S000000 | 1000/5A | 30VA |

Primary Ratios available from 100A to 1000A

| Cat No. | Ratio | VA at CL 1.0 |
|---|---|---|
| XM18-185071S000000 | 100/5A | 3.75VA |
| XM18-205081S000000 | 125/5A | 5VA |
| XM18-225081S000000 | 150/5A | 5VA |
| XM18-245101S000000 | 200/5A | 7.5VA |
| XM18-275121S000000 | 250/5A | 12.5VA |
| XM18-285131S000000 | 300/5A | 15VA |
| XM18-315141S000000 | 400/5A | 20VA |
| XM18-325151S000000 | 500/5A | 30VA |
| XM18-335151S000000 | 600/5A | 30VA |
| XM18-365151S000000 | 750/5A | 30VA |
| XM18-375151S000000 | 800/5A | 30VA |
| XM18-395151S000000 | 1000/5A | 30VA |

Primary Ratios available from 60A to 1000A

## Dimensions

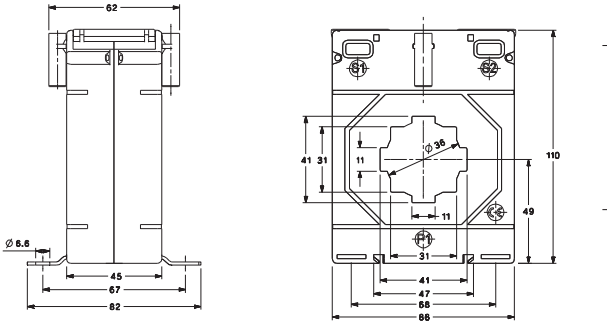


# LCTB 86/50



**Note: Model available in Class 0.2S please refer to page 31**

## LCTB 86/50 (86mm wide x 45mm deep x (51 x 51mm) I.D.)

| Cat No. | Ratio | VA at CL 0.5 |
|---|---|---|
| XM19-245085S000000 | 200/5A | 5VA |
| XM19-275105S000000 | 250/5A | 7.5VA |
| XM19-285105S000000 | 300/5A | 7.5VA |
| XM19-315135S000000 | 400/5A | 15VA |
| XM19-325135S000000 | 500/5A | 15VA |
| XM19-335135S000000 | 600/5A | 15VA |
| XM19-365135S000000 | 750/5A | 15VA |
| XM19-375145S000000 | 800/5A | 20VA |
| XM19-395155S000000 | 1000/5A | 30VA |
| XM19-405155S000000 | 1200/5A | 30VA |
| XM19-415155S000000 | 1250/5A | 30VA |

Primary Ratios available from 125A to 1250A

| Cat No. | Ratio | VA at CL 1.0 |
|---|---|---|
| XM19-245101S000000 | 200/5A | 7.5VA |
| XM19-275111S000000 | 250/5A | 10VA |
| XM19-285111S000000 | 300/5A | 10VA |
| XM19-315131S000000 | 400/5A | 15VA |
| XM19-325141S000000 | 500/5A | 20VA |
| XM19-335141S000000 | 600/5A | 20VA |
| XM19-365141S000000 | 750/5A | 20VA |
| XM19-375151S000000 | 800/5A | 30VA |
| XM19-395151S000000 | 1000/5A | 30VA |
| XM19-405151S000000 | 1200/5A | 30VA |
| XM19-415151S000000 | 1250/5A | 30VA |

Primary Ratios available from 100A to 1250A

## Dimensions

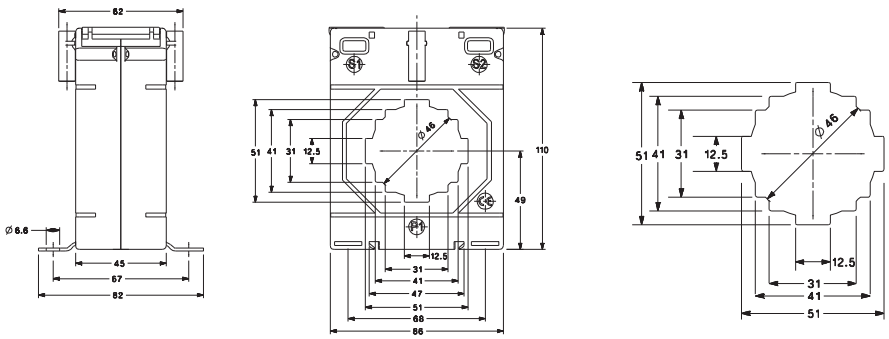


All dimensions are in mm.

NOTE: Please consult Sifam Tinsley on 1A secondary for availability.

**Features given vary from product to product - for more detailed product specific info please visit our website www.sifamtinsley.co.uk**

# LCTB 86/60

## LCTB 86/60 (86mm wide x 45mm deep x (61 x 51mm) I.D.)

| Cat No. | Ratio | VA at CL 0.5 |
|---|---|---|
| XM20-275055S000000 | 250/5A | 2.5VA |
| XM20-285085S000000 | 300/5A | 5VA |
| XM20-315115S000000 | 400/5A | 10VA |
| XM20-325115S000000 | 500/5A | 10VA |
| XM20-335135S000000 | 600/5A | 15VA |
| XM20-365135S000000 | 750/5A | 15VA |
| XM20-375145S000000 | 800/5A | 20VA |
| XM20-395145S000000 | 1000/5A | 20VA |
| XM20-405145S000000 | 1200/5A | 20VA |
| XM20-415145S000000 | 1250/5A | 20VA |
| XM20-425145S000000 | 1500/5A | 20VA |
| XM20-435145S000000 | 1600/5A | 20VA |

Primary Ratios available from 200A to 1600A

| Cat No. | Ratio | VA at CL 1.0 |
|---|---|---|
| XM20-275051S000000 | 250/5A | 2.5VA |
| XM20-285081S000000 | 300/5A | 5VA |
| XM20-315111S000000 | 400/5A | 10VA |
| XM20-325111S000000 | 500/5A | 10VA |
| XM20-335131S000000 | 600/5A | 15VA |
| XM20-365141S000000 | 750/5A | 20VA |
| XM20-375141S000000 | 800/5A | 20VA |
| XM20-395141S000000 | 1000/5A | 20VA |
| XM20-405141S000000 | 1200/5A | 20VA |
| XM20-415141S000000 | 1250/5A | 20VA |
| XM20-425141S000000 | 1500/5A | 20VA |
| XM20-435141S000000 | 1600/5A | 20VA |

Primary Ratios available from 100A to 1600A



**Note: Model available in Class 0.2S please refer to page 31**

## Dimensions

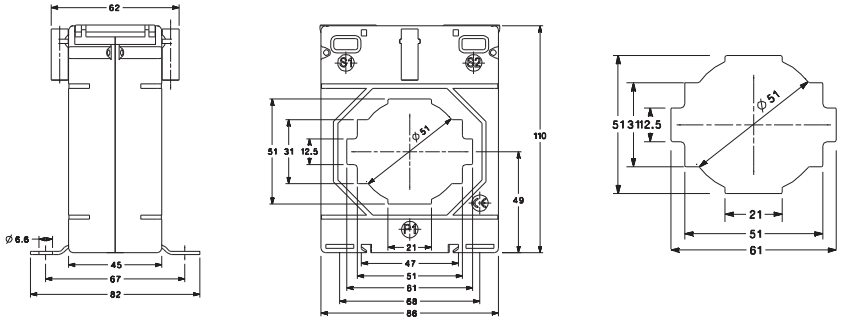


# LCTB 104/60

## LCTB 104/60 (104mm wide x 45mm deep x (60 x 12mm) I.D.)

| Cat No. | Ratio | VA at CL 0.5 |
|---|---|---|
| XM21-275105S000000 | 250/5A | 7.5VA |
| XM21-285115S000000 | 300/5A | 10VA |
| XM21-315115S000000 | 400/5A | 10VA |
| XM21-325135S000000 | 500/5A | 15VA |
| XM21-335135S000000 | 600/5A | 15VA |
| XM21-365145S000000 | 750/5A | 20VA |
| XM21-375155S000000 | 800/5A | 30VA |
| XM21-395155S000000 | 1000/5A | 30VA |
| XM21-405155S000000 | 1200/5A | 30VA |
| XM21-415155S000000 | 1250/5A | 30VA |
| XM21-425155S000000 | 1500/5A | 30VA |
| XM21-365155S000000 | 1600/5A | 30VA |

Primary Ratios available from 150A to 1600A

| Cat No. | Ratio | VA at CL 1.0 |
|---|---|---|
| XM21-275121S000000 | 250/5A | 12.5VA |
| XM21-285131S000000 | 300/5A | 15VA |
| XM21-315131S000000 | 400/5A | 15VA |
| XM21-325141S000000 | 500/5A | 20VA |
| XM21-335151S000000 | 600/5A | 30VA |
| XM21-365151S000000 | 750/5A | 30VA |
| XM21-375151S000000 | 800/5A | 30VA |
| XM21-395161S000000 | 1000/5A | 45VA |
| XM21-405161S000000 | 1200/5A | 45VA |
| XM21-415161S000000 | 1250/5A | 45VA |
| XM21-425161S000000 | 1500/5A | 45VA |
| XM21-365161S000000 | 1600/5A | 45VA |

Primary Ratios available from 100A to 1600A



**Note: Model available in Class 0.2S please refer to page 32**

## Dimensions

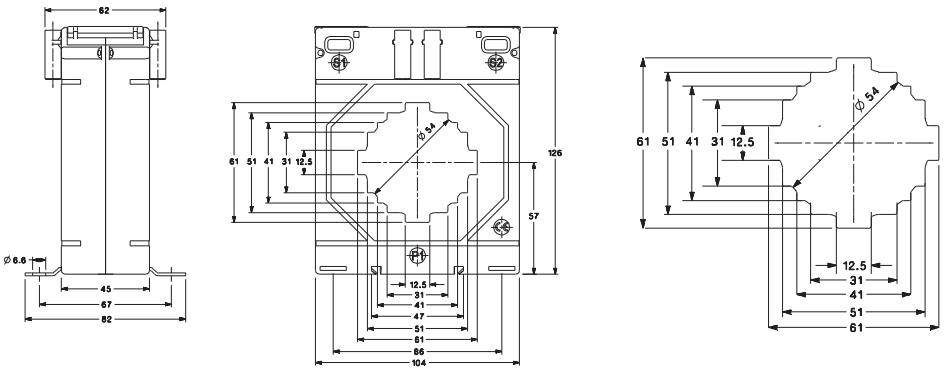

# LCTB 104/80



**Note: Model available in Class 0.2S please refer to page 32**

## LCTB 104/80 (104mm wide x 45mm deep x (80 x 12mm) I.D.)

| Cat No. | Ratio | VA at CL 0.5 |
|---|---|---|
| XM22-275035S000000 | 250/5A | 1.5VA |
| XM22-285055S000000 | 300/5A | 2.5VA |
| XM22-315085S000000 | 400/5A | 5VA |
| XM22-325085S000000 | 500/5A | 5VA |
| XM22-335105S000000 | 600/5A | 7.5VA |
| XM22-365115S000000 | 750/5A | 10VA |
| XM22-375115S000000 | 800/5A | 10VA |
| XM22-395145S000000 | 1000/5A | 20VA |
| XM22-405145S000000 | 1200/5A | 20VA |
| XM22-415145S000000 | 1250/5A | 20VA |
| XM22-425145S000000 | 1500/5A | 20VA |
| XM22-435145S000000 | 1600/5A | 20VA |
| XM22-445145S000000 | 2000/5A | 20VA |

Primary Ratios available from 250A to 2000A

| Cat No. | Ratio | VA at CL 1.0 |
|---|---|---|
| XM22-275051S000000 | 250/5A | 2.5VA |
| XM22-285101S000000 | 300/5A | 7.5VA |
| XM22-315111S000000 | 400/5A | 10VA |
| XM22-325111S000000 | 500/5A | 10VA |
| XM22-335121S000000 | 600/5A | 12.5VA |
| XM22-365131S000000 | 750/5A | 15VA |
| XM22-375131S000000 | 800/5A | 15VA |
| XM22-395141S000000 | 1000/5A | 20VA |
| XM22-405151S000000 | 1200/5A | 30VA |
| XM22-415151S000000 | 1250/5A | 30VA |
| XM22-425151S000000 | 1500/5A | 30VA |
| XM22-435151S000000 | 1600/5A | 30VA |
| XM22-445151S000000 | 2000/5A | 30VA |

Primary Ratios available from 200A to 2000A

## Dimensions

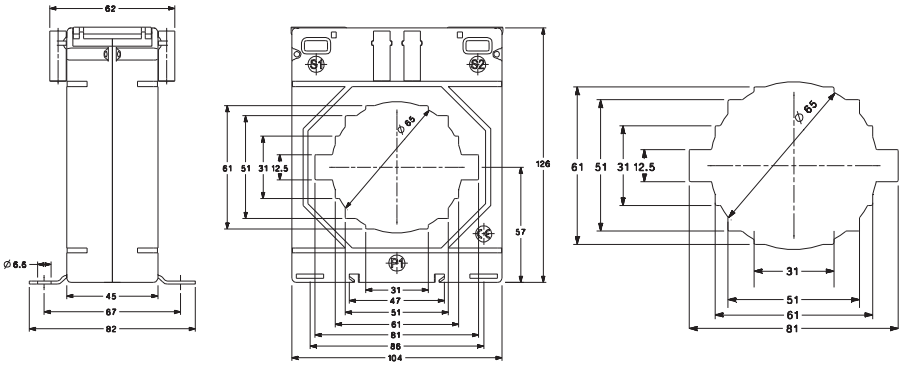


# LCTB 140/80



**Note: Model available in Class 0.2S please refer to page 33**

## LCTB 140/80 (140mm wide x 45mm deep x (80mm x 30mm) I.D.)

| Cat No. | Ratio | VA at CL 0.5 |
|---|---|---|
| XM23-275085S000000 | 250/5A | 5VA |
| XM23-285105S000000 | 300/5A | 7.5VA |
| XM23-315115S000000 | 400/5A | 10VA |
| XM23-325135S000000 | 500/5A | 15VA |
| XM23-335135S000000 | 600/5A | 15VA |
| XM23-365135S000000 | 750/5A | 15VA |
| XM23-375135S000000 | 800/5A | 15VA |
| XM23-395155S000000 | 1000/5A | 30VA |
| XM23-405155S000000 | 1200/5A | 30VA |
| XM23-415175S000000 | 1250/5A | 60VA |
| XM23-425175S000000 | 1500/5A | 60VA |
| XM23-435175S000000 | 1600/5A | 60VA |
| XM23-445175S000000 | 2000/5A | 60VA |

Primary Ratios available from 200A to 2000A

| Cat No. | Ratio | VA at CL 1.0 |
|---|---|---|
| XM23-275111S000000 | 250/5A | 10VA |
| XM23-285131S000000 | 300/5A | 15VA |
| XM23-315141S000000 | 400/5A | 20VA |
| XM23-325151S000000 | 500/5A | 30VA |
| XM23-335151S000000 | 600/5A | 30VA |
| XM23-365161S000000 | 750/5A | 45VA |
| XM23-375161S000000 | 800/5A | 45VA |
| XM23-395171S000000 | 1000/5A | 60VA |
| XM23-405171S000000 | 1200/5A | 60VA |
| XM23-415171S000000 | 1250/5A | 60VA |
| XM23-425171S000000 | 1500/5A | 60VA |
| XM23-435171S000000 | 1600/5A | 60VA |
| XM23-445171S000000 | 2000/5A | 60VA |

Primary Ratios available from 200A to 2000A

## Dimensions

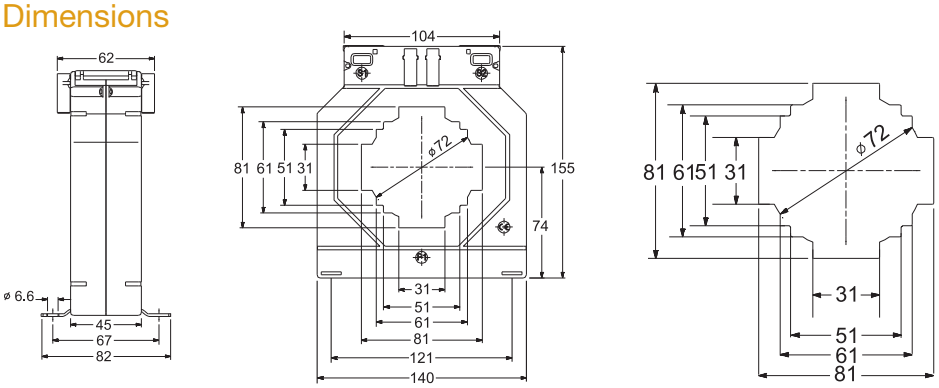


All dimensions are in mm.

NOTE: Please consult Sifam Tinsley on 1A secondary for availability.

**Features given vary from product to product - for more detailed product specific info please visit our website www.sifamtinsley.co.uk**

## LCTB 140/100H (140mm wide x 45mm deep x (100 x 30mm) I.D.)

| Cat No. | Ratio | VA at CL 0.5 |
|---|---|---|
| XM24-325115S000000 | 500/5A | 10VA |
| XM24-335115S000000 | 600/5A | 10VA |
| XM24-365135S000000 | 750/5A | 15VA |
| XM24-375135S000000 | 800/5A | 15VA |
| XM24-395135S000000 | 1000/5A | 15VA |
| XM24-405135S000000 | 1200/5A | 15VA |
| XM24-415135S000000 | 1250/5A | 15VA |
| XM24-425145S000000 | 1500/5A | 20VA |
| XM24-435145S000000 | 1600/5A | 20VA |
| XM24-445165S000000 | 2000/5A | 45VA |
| XM24-465165S000000 | 2500/5A | 45VA |
| XM24-485175S000000 | 3000/5A | 60VA |
| XM24-515175S000000 | 4000/5A | 60VA |

Primary Ratios available from 200A to 4000A

| Cat No. | Ratio | VA at CL 1.0 |
|---|---|---|
| XM24-325151S000000 | 500/5A | 12.5VA |
| XM24-335151S000000 | 600/5A | 15VA |
| XM24-365161S000000 | 750/5A | 20VA |
| XM24-375141S000000 | 800/5A | 20VA |
| XM24-395141S000000 | 1000/5A | 20VA |
| XM24-405151S000000 | 1200/5A | 30VA |
| XM24-415151S000000 | 1250/5A | 30VA |
| XM24-425151S000000 | 1500/5A | 30VA |
| XM24-435161S000000 | 1600/5A | 45VA |
| XM24-445161S000000 | 2000/5A | 45VA |
| XM24-465161S000000 | 2500/5A | 45VA4 |
| XM24-485171S000000 | 3000/5A | 60VA |
| XM24-515171S000000 | 4000/5A | 60VA |

Primary Ratios available from 200A to 4000A

## Dimensions

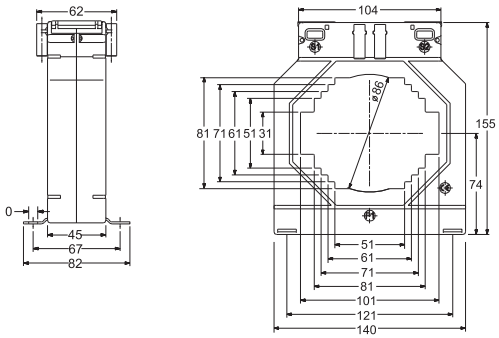


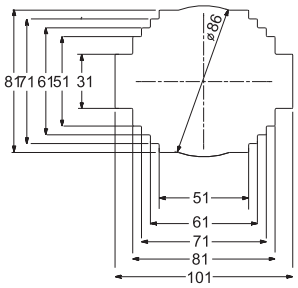


# LCTB 140/100H

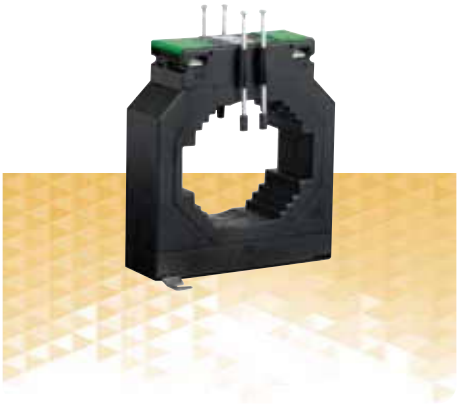

**Note: Model available in Class 0.2S please refer to page 33**

## LCTB 140/100V (140mm wide x 45mm deep x (81 x 101mm) I.D.)

| Cat No. | Ratio | VA at CL 0.5 |
|---|---|---|
| XM25-325115S000000 | 500/5A | 10VA |
| XM25-335125S000000 | 600/5A | 12.5VA |
| XM25-365135S000000 | 750/5A | 15VA |
| XM25-375135S000000 | 800/5A | 15VA |
| XM25-395135S000000 | 1000/5A | 15VA |
| XM25-405135S000000 | 1200/5A | 15VA |
| XM25-415135S000000 | 1250/5A | 15VA |
| XM25-425155S000000 | 1500/5A | 30VA |
| XM25-435165S000000 | 1600/5A | 45VA |
| XM25-445165S000000 | 2000/5A | 45VA |
| XM25-465165S000000 | 2500/5A | 45VA |
| XM25-485175S000000 | 3000/5A | 60VA |

Primary Ratios available from 200A to 3000A

| Cat No. | Ratio | VA at CL 1.0 |
|---|---|---|
| XM25-325121S000000 | 500/5A | 12.5VA |
| XM25-335131S000000 | 600/5A | 15VA |
| XM25-365141S000000 | 750/5A | 20VA |
| XM25-375141S000000 | 800/5A | 20VA |
| XM25-395141S000000 | 1000/5A | 20VA |
| XM25-405151S000000 | 1200/5A | 30VA |
| XM25-415151S000000 | 1250/5A | 30VA |
| XM25-425151S000000 | 1500/5A | 30VA |
| XM25-435161S000000 | 1600/5A | 45VA |
| XM25-445161S000000 | 2000/5A | 45VA |
| XM25-465161S000000 | 2500/5A | 45VA |
| XM25-485171S000000 | 3000/5A | 60VA |

Primary Ratios available from 200A to 3000A

## Dimensions

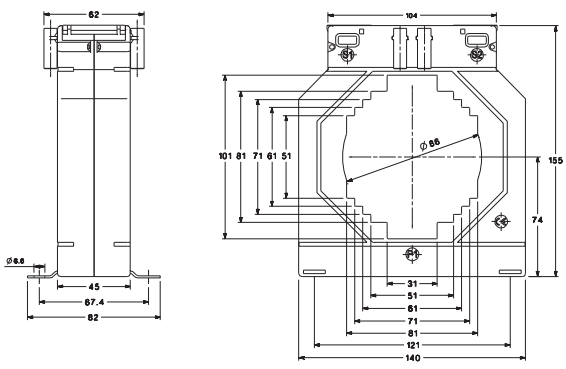


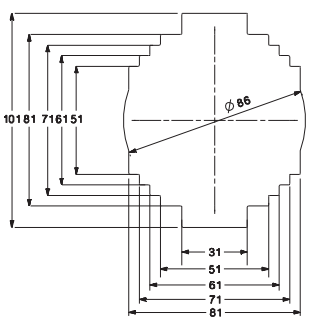


# LCTB 140/100V



**Note: Model available in Class 0.2S please refer to page 34**

# LCTB 100/100V



**Note: Model available in Class 0.2S please refer to page 34**

## LCTB 100/100V (170mm wide x 99mm deep x (41 x 103mm) I.D.)

| Cat No. | Ratio | VA at CL 0.5 |
|---|---|---|
| XR01-335055S000000 | 600/5A | 2.5VA |
| XR01-365055S000000 | 750/5A | 2.5VA |
| XR01-375085S000000 | 800/5A | 5VA |
| XR01-395115S000000 | 1000/5A | 10VA |
| XR01-405115S000000 | 1200/5A | 10VA |
| XR01-415115S000000 | 1250/5A | 10VA |
| XR01-425135S000000 | 1500/5A | 15VA |
| XR01-435135S000000 | 1600/5A | 15VA |
| XR01-445135S000000 | 2000/5A | 15VA |
| XR01-465135S000000 | 2500/5A | 15VA |

Primary Ratios available from 400A to 2500A

| Cat No. | Ratio | VA at CL 1.0 |
|---|---|---|
| XR01-335081S000000 | 600/5A | 5VA |
| XR01-365081S000000 | 750/5A | 5VA |
| XR01-375111S000000 | 800/5A | 10VA |
| XR01-395131S000000 | 1000/5A | 15VA |
| XR01-405131S000000 | 1200/5A | 15VA |
| XR01-415131S000000 | 1250/5A | 15VA |
| XR01-425151S000000 | 1500/5A | 30VA |
| XR01-435151S000000 | 1600/5A | 30VA |
| XR01-445151S000000 | 2000/5A | 30VA |
| XR01-465141S000000 | 2500/5A | 20VA |

Primary Ratios available from 400A to 2500A

## Dimensions

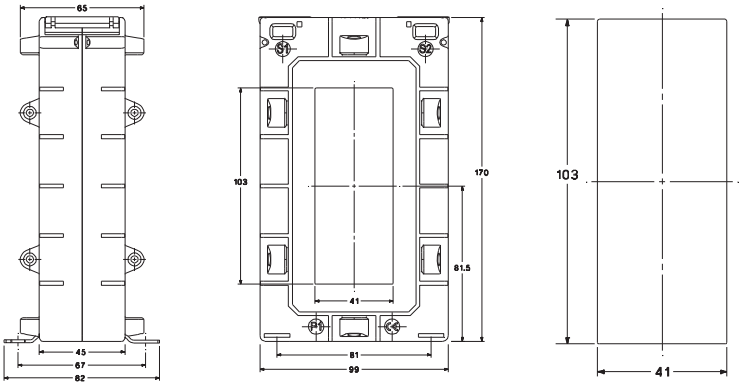


# LCTB 100/130V



## LCTB 100/130V (170mm wide x 99mm deep x (38 x 128mm) I.D.)

| Cat No. | Ratio | VA at CL 0.5 |
|---|---|---|
| XR02-335055S000000 | 600/5A | 2.5VA |
| XR02-365055S000000 | 750/5A | 2.5VA |
| XR02-375085S000000 | 800/5A | 5VA |
| XR02-395115S000000 | 1000/5A | 10VA |
| XR02-405115S000000 | 1200/5A | 10VA |
| XR02-415115S000000 | 1250/5A | 10VA |
| XR02-425135S000000 | 1500/5A | 15VA |
| XR02-435135S000000 | 1600/5A | 15VA |
| XR02-445135S000000 | 2000/5A | 15VA |
| XR02-465135S000000 | 2500/5A | 15VA |
| XR02-485115S000000 | 3000/5A | 10VA |
| XR02-495115S000000 | 3200/5A | 10VA |

Primary Ratios available from 400A to 3200A

| Cat No. | Ratio | VA at CL 1.0 |
|---|---|---|
| XR02-335081S000000 | 600/5A | 5VA |
| XR02-365081S000000 | 750/5A | 5VA |
| XR02-375111S000000 | 800/5A | 10VA |
| XR02-395131S000000 | 1000/5A | 15VA |
| XR02-405131S000000 | 1200/5A | 15VA |
| XR02-415131S000000 | 1250/5A | 15VA |
| XR02-425151S000000 | 1500/5A | 30VA |
| XR02-435151S000000 | 1600/5A | 30VA |
| XR02-445151S000000 | 2000/5A | 30VA |
| XR02-46515S000000 | 2500/5A | 30VA |
| XR02-485121S000000 | 3000/5A | 12.5VA |
| XR02-495121S000000 | 200/5A | 12.5VA |

Primary Ratios available from 400A to 3200A

## Dimensions

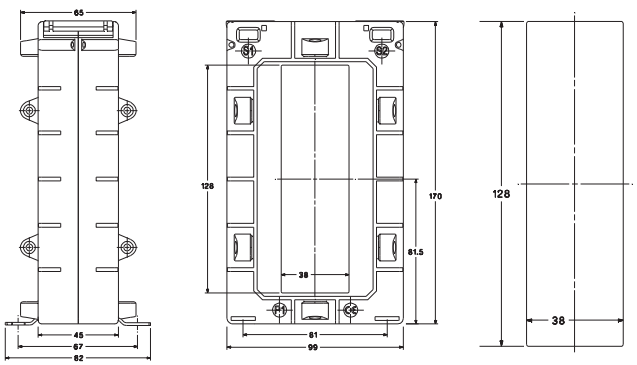


All dimensions are in mm.

NOTE: Please consult Sifam Tinsley on 1A secondary for availability.

**Features given vary from product to product - for more detailed product specific info please visit our website www.sifamtinsley.co.uk**

# LCTB 140/130V

## LCTB 140/130V (140mm wide x 45mm deep x (70 x 130mm) I.D.)

| Cat No. | Ratio | VA at CL 0.5 |
|---|---|---|
| XR03-335055S000000 | 600/5A | 3.75VA |
| XR03-365055S000000 | 750/5A | 5VA |
| XR03-375085S000000 | 800/5A | 5VA |
| XR03-395115S000000 | 1000/5A | 10VA |
| XR03-405115S000000 | 1200/5A | 10VA |
| XR03-415115S000000 | 1250/5A | 10VA |
| XR03-425135S000000 | 1500/5A | 15VA |
| XR03-435135S000000 | 1600/5A | 15VA |
| XR03-445145S000000 | 2000/5A | 20VA |
| XR03-465145S000000 | 2500/5A | 20VA |
| XR03-485145S000000 | 3000/5A | 20VA |
| XR03-495145S000000 | 3200/5A | 20VA |
| XR03-515145S000000 | 4000/5A | 20VA |
| XR03-525145S000000 | 5000/5A | 20VA |

Primary Ratios available from 400A to 5000A

| Cat No. | Ratio | VA at CL 1.0 |
|---|---|---|
| XR03-335081S000000 | 600/5A | 5VA |
| XR03-365101S000000 | 750/5A | 7.5VA |
| XR03-375101S000000 | 800/5A | 7.5VA |
| XR03-395111S000000 | 1000/5A | 10VA |
| XR03-405131S000000 | 1200/5A | 15VA |
| XR03-415131S000000 | 1250/5A | 15VA |
| XR03-425131S000000 | 1500/5A | 15VA |
| XR03-435131S000000 | 1600/5A | 15VA |
| XR03-445141S000000 | 2000/5A | 20VA |
| XR03-465141S000000 | 2500/5A | 20VA |
| XR03-485141S000000 | 3000/5A | 20VA |
| XR03-495141S000000 | 3200/5A | 20VA |
| XR03-515141S000000 | 4000/5A | 20VA |
| XR03-525141S000000 | 5000/5A | 20VA |

Primary Ratios available from 400A to 5000A

## Dimensions

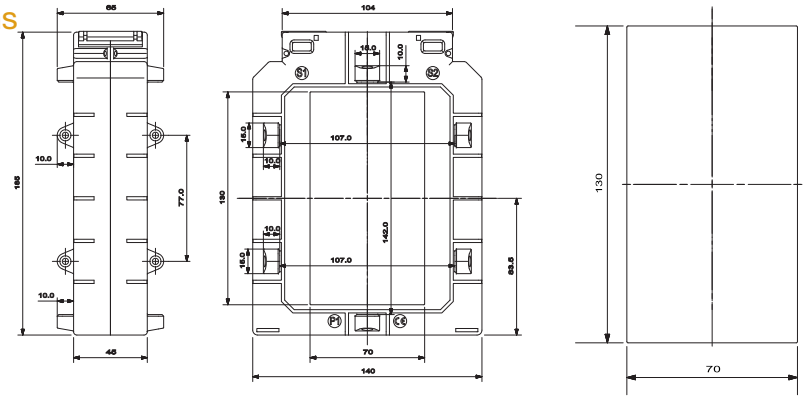


# LCTB 225/125

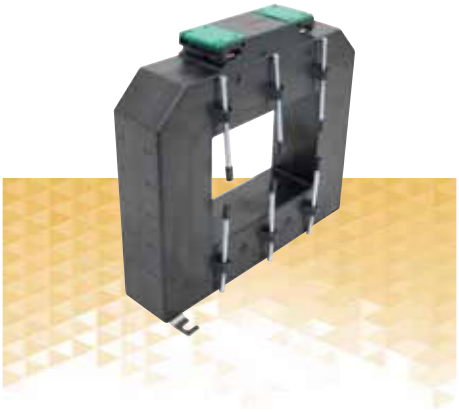

**Note: Model available in Class 0.2S please refer to page 36**

## LCTB 225/125 (225mm wide x 50mm deep x (125mm x 93mm) I.D.)

| Cat No. | Ratio | VA at CL 0.5 |
|---|---|---|
| XR04-395115S000000 | 1000/5A | 10VA |
| XR04-405115S000000 | 1200/5A | 10VA |
| XR04-415115S000000 | 1250/5A | 10VA |
| XR04-425135S000000 | 1500/5A | 15VA |
| XR04-435135S000000 | 1600/5A | 15VA |
| XR04-445135S000000 | 2000/5A | 15VA |
| XR04-465155S000000 | 2500/5A | 30VA |
| XR04-485155S000000 | 3000/5A | 30VA |
| XR04-515165S000000 | 4000/5A | 45VA |
| XR04-525185S000000 | 5000/5A | 100VA |
| XR04-535185S000000 | 6000/5A | 100VA |

Primary Ratios available from 600A to 6000A

| Cat No. | Ratio | VA at CL 1.0 |
|---|---|---|
| XR04-395131S000000 | 1000/5A | 15VA |
| XR04-405131S000000 | 1200/5A | 15VA |
| XR04-415131S000000 | 1250/5A | 15VA |
| XR04-425151S000000 | 1500/5A | 30VA |
| XR04-435151S000000 | 1600/5A | 30VA |
| XR04-445151S000000 | 2000/5A | 30VA |
| XR04-465151S000000 | 2500/5A | 30VA |
| XR04-485171S000000 | 3000/5A | 60VA |
| XR04-515171S000000 | 4000/5A | 60VA |
| XR04-525181S000000 | 5000/5A | 100VA |
| XR04-535181S000000 | 6000/5A | 100VA |

Primary Ratios available from 200A to 3000A

## Dimensions

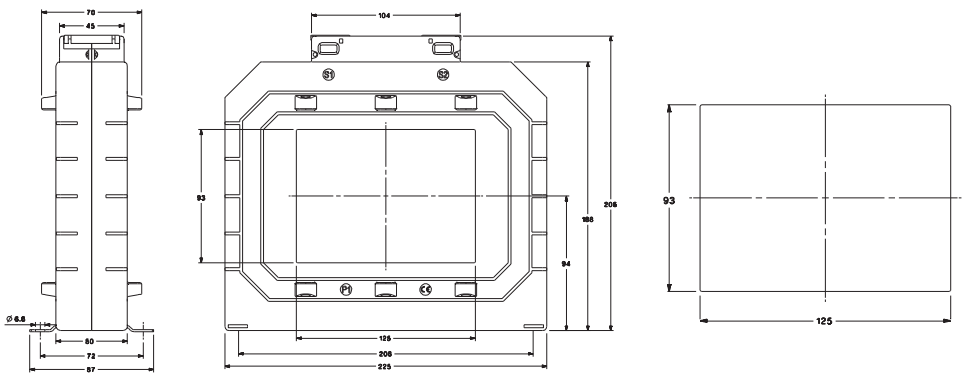

# LCTB 225/167

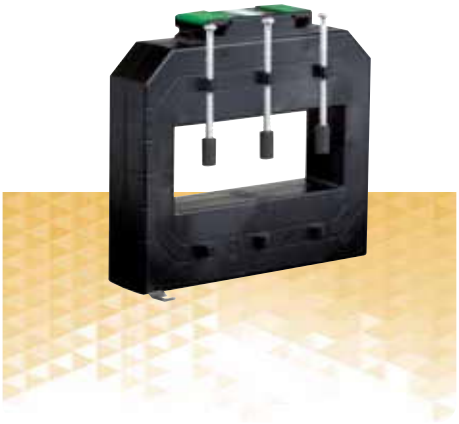

**Note: Model available in Class 0.25 please refer to page 36**

## LCTB 225/167 (225mm wide x 50mm deep x (167mm x 66mm) I.D.)

| Cat No. | Ratio | VA at CL 0.5 |
|---|---|---|
| XR05-395085S000000 | 1000/5A | 5VA |
| XR05-405115S000000 | 1200/5A | 10VA |
| XR05-415115S000000 | 1250/5A | 10VA |
| XR05-425135S000000 | 1500/5A | 15VA |
| XR05-435135S000000 | 1600/5A | 15VA |
| XR05-445155S000000 | 2000/5A | 30VA |
| XR05-465155S000000 | 2500/5A | 30VA |
| XR05-485155S000000 | 3000/5A | 30VA |
| XR05-515155S000000 | 4000/5A | 30VA |
| XR05-525155S000000 | 5000/5A | 30VA |
| XR05-535155S000000 | 6000/5A | 30VA |
| XR05-545155S000000 | 7500/5A | 30VA |

Primary Ratios available from 1000A to 7500A

| Cat No. | Ratio | VA at CL 1.0 |
|---|---|---|
| XR05-395111S000000 | 1000/5A | 10VA |
| XR05-405131S000000 | 1200/5A | 15VA |
| XR05-415131S000000 | 1250/5A | 15VA |
| XR05-425151S000000 | 1500/5A | 30VA |
| XR05-435151S000000 | 1600/5A | 30VA |
| XR05-445151S000000 | 2000/5A | 30VA |
| XR05-465151S000000 | 2500/5A | 45VA |
| XR05-485161S000000 | 3000/5A | 45VA |
| XR05-515161S000000 | 4000/5A | 45VA |
| XR05-525161S000000 | 5000/5A | 45VA |
| XR05-535161S000000 | 6000/5A | 45VA |
| XR05-545165S000000 | 7500/5A | 45VA |

Primary Ratios available from 1000A to 7500A

## Dimensions

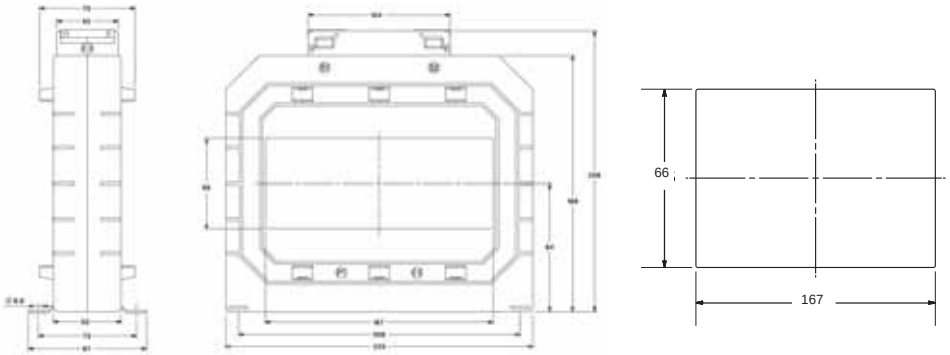


# LCTB 130/100V



**Note: Model available in Class 0.25 please refer to page 37**

## LCTB 130/100V (140mm wide x 45mm deep x (101 x 56mm) I.D.)

| Cat No. | Ratio | VA at CL 0.5 |
|---|---|---|
| XR06-335111S000000 | 600/5A | 10VA |
| XR06-365111S000000 | 750/5A | 10VA |
| XR06-375111S000000 | 800/5A | 10VA |
| XR06-395131S000000 | 1000/5A | 15VA |
| XR06-405131S000000 | 1200/5A | 15VA |
| XR06-415131S000000 | 1250/5A | 15VA |
| XR06-425131S000000 | 1500/5A | 15VA |
| XR06-435131S000000 | 1600/5A | 15VA |
| XR06-445131S000000 | 2000/5A | 15VA |
| XR06-465131S000000 | 2500/5A | 15VA |
| XR06-485131S000000 | 3000/5A | 15VA |

Primary Ratios available from 600A to 3000A

| Cat No. | Ratio | VA at CL 1.0 |
|---|---|---|
| XR06-335115S000000 | 600/5A | 10VA |
| XR06-365115S000000 | 750/5A | 10VA |
| XR06-375115S000000 | 800/5A | 10VA |
| XR06-395135S000000 | 1000/5A | 15VA |
| XR06-405135S000000 | 1200/5A | 15VA |
| XR06-415135S000000 | 1250/5A | 15VA |
| XR06-425135S000000 | 1500/5A | 15VA |
| XR06-435135S000000 | 1600/5A | 15VA |
| XR06-445135S000000 | 2000/5A | 15VA |
| XR06-466135S000000 | 2500/5A | 15VA |
| XR06-485135S000000 | 3000/5A | 15VA |

Primary Ratios available from 600A to 3000A

## Dimensions

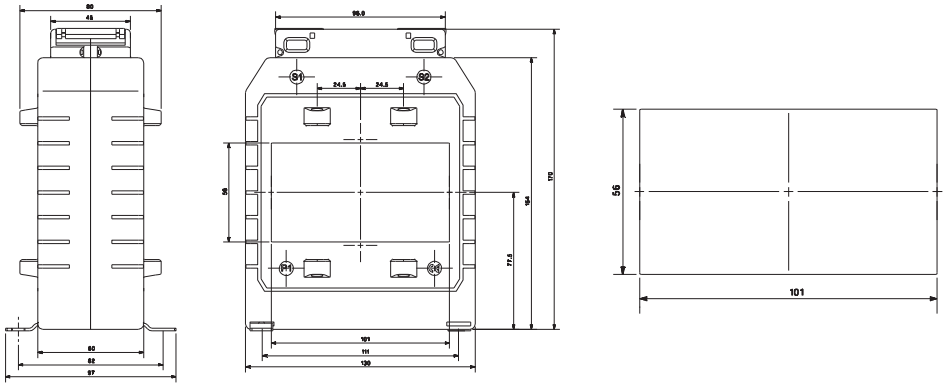


All dimensions are in mm.

NOTE: Please consult Sifam Tinsley on 1A secondary for availability.

**Features given vary from product to product - for more detailed product specific info please visit our website www.sifamtinsley.co.uk**

# OMEGA Split Core

## OMEGA 10

Omega series split core transformers offer a cost effective and efficient method by which the current can be measured without the need to break the conductor, thereby reducing installation and commissioning time.



## Specifications

- Primary current 100A to 5000A
- Secondary current 1A or 5A
- System voltage 720V (0.72kV) maximum
- Test voltage 3kV for 1 minute
- System frequency 50 or 60 Hz
- Insulation class E
- Overload withstand 1.2 times rated current continuously
- Short circuit thermal 60 x rated primary for 1 second
- Operating temperature 20°C to 70°C
- Relative humidity 0-90% (non condensing)
- Compliant with EN 60044-1 / IEC 61869-1
- Accuracy Class 3, 1 & 0.5
- Rated dynamic current = 2.55 x 1ht
- Enclosure Flame retardant grade classified UL 94V-O

c UL us
File No. E472409

### Features

- Compliant with EN 60044-1 / IEC 61869-1
- Flame retardant grade enclosure (UL 94V-O)
- Operation free installation
- Test voltage 3kV 50Hz 1min.
- System voltage 720V max.
- Ratio ratings from 100/5A to 5000/5A
- Available in 0.5, 1 and 3 accuracy class
- Insulation class: E
- UL approved

OMEGA 10

## OMEGA 10A



### OMEGA 10A (93mm wide x 40mm deep x (33mm x 23mm) I.D.)

| Cat No. | Ratio | VA at CL 1.0 |
|---|---|---|
| XS01-185031S000000 | 100/5A | 1.5VA |
| XS01-225221S000000 | 150/5A | 1.75VA |
| XS01-245051S000000 | 200/5A | 2.5VA |

| Cat No. | Ratio | VA at CL 1.0 |
|---|---|---|
| XS01-275071S000000 | 250/5A | 3.75VA |
| XS01-285081S000000 | 300/5A | 5VA |
| XS01-315091S000000 | 400/5A | 6.25VA |

**Note Class 0.5 possible on ratio's 300 and 400 amps**

## Dimensions

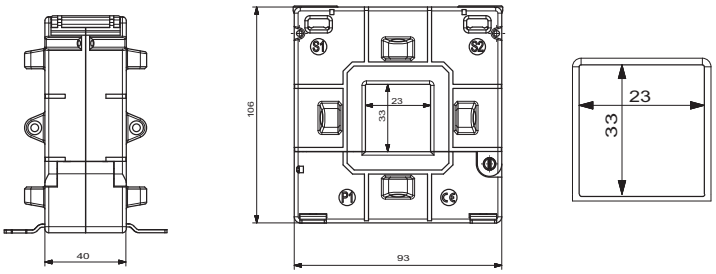

# OMEGA 10B



## OMEGA 10B (125mm wide x 40mm deep x (50mm x 80mm) I.D.)

| Cat No. | Ratio | VA at CL 0.5 |
|---|---|---|
| XS02-275015S000000 | 250/5A | 1VA |
| XS02-285055S000000 | 300/5A | 2.5VA |
| XS02-315055S000000 | 400/5A | 2.5VA |
| XS02-325075S000000 | 500/5A | 3.75VA |
| XS02-335085S000000 | 600/5A | 5VA |
| XS02-375105S000000 | 800/5A | 7.5VA |
| XS02-395115S000000 | 1000/5A | 10VA |
| XS02-405115S000000 | 1200/5A | 10VA |
| XS02-415115S000000 | 1250/5A | 10VA |
| XS02-425115S000000 | 1500/5A | 10VA |
| XS02-435115S000000 | 1600/5A | 10VA |
| XS02-445115S000000 | 2000/5A | 10VA |

| Cat No. | Ratio | VA at CL 1.0 |
|---|---|---|
| XS02-275051S000000 | 250/5A | 2.5VA |
| XS02-285071S000000 | 300/5A | 3.75VA |
| XS02-315071S000000 | 400/5A | 3.75VA |
| XS02-325081S000000 | 500/5A | 5VA |
| XS02-335101S000000 | 600/5A | 7.5VA |
| XS02-375111S000000 | 800/5A | 10VA |
| XS02-395131S000000 | 1000/5A | 15VA |
| XS02-405131S000000 | 1200/5A | 15VA |
| XS02-415131S000000 | 1250/5A | 15VA |
| XS02-425131S000000 | 1500/5A | 15VA |
| XS02-435131S000000 | 1600/5A | 15VA |
| XS02-445131S000000 | 2000/5A | 15VA |

## Dimensions

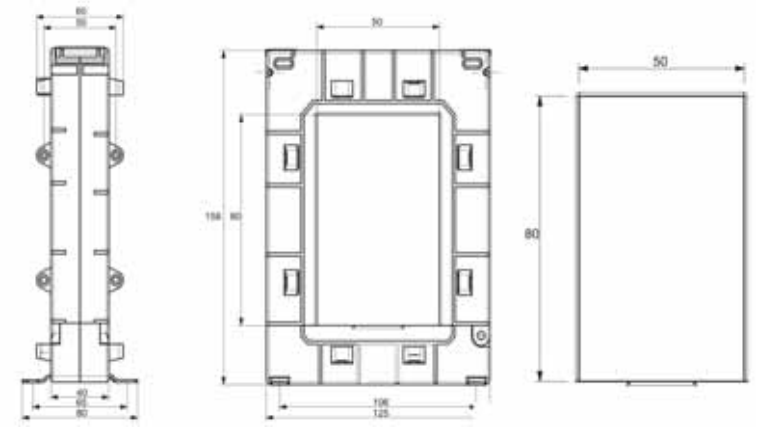


# OMEGA 10C



## OMEGA 10C (155mm wide x 40mm deep x (120mm x 80mm) I.D.)

| Cat No. | Ratio | VA at CL 0.5 |
|---|---|---|
| XS03-335085S000000 | 600/5A | 5VA |
| XS03-375105S000000 | 800/5A | 7.5VA |
| XS03-395115S000000 | 1000/5A | 10VA |
| XS03-405135S000000 | 1200/5A | 15VA |
| XS03-415135S000000 | 1250/5A | 15VA |
| XS03-425145S000000 | 1500/5A | 20VA |
| XS03-435145S000000 | 1600/5A | 20VA |
| XS03-445145S000000 | 2000/5A | 20VA |
| XS03-465205S000000 | 2500/5A | 25VA |
| XS03-485155S000000 | 3000/5A | 30VA |

| Cat No. | Ratio | VA at CL 1.0 |
|---|---|---|
| XS03-335105S000000 | 600/5A | 7.5VA |
| XS03-375111S000000 | 800/5A | 10VA |
| XS03-395131S000000 | 1000/5A | 15VA |
| XS03-405151S000000 | 1200/5A | 30VA |
| XS03-415151S000000 | 1250/5A | 30VA |
| XS03-425161S000000 | 1500/5A | 45VA |
| XS03-435161S000000 | 1600/5A | 45VA |
| XS03-445161S000000 | 2000/5A | 45VA |
| XS03-465161S000000 | 2500/5A | 45VA |
| XS03-485161S000000 | 3000/5A | 45VA |

## Dimensions

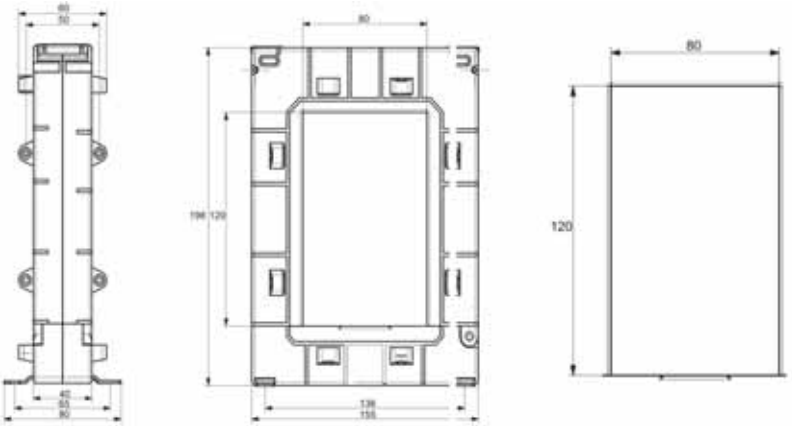


All dimensions are in mm

**Features given vary from product to product - for more detailed product specific info please visit our website www.sifamtinsley.co.uk**

## OMEGA 10D (195mm wide x 64mm deep x (80mm x 160mm) I.D.)

| Cat No. | Ratio | VA at CL 0.5 |
|---|---|---|
| XS04-395115S000000 | 1000/5A | 10VA |
| XS04-405135S000000 | 1200/5A | 15VA |
| XS04-415135S000000 | 1250/5A | 15VA |
| XS04-425145S000000 | 1500/5A | 20VA |
| XS04-435145S000000 | 1600/5A | 20VA |
| XS04-445205S000000 | 2000/5A | 25VA |
| XS04-465205S000000 | 2500/5A | 25VA |
| XS04-485155S000000 | 3000/5A | 30VA |
| XS04-515155S000000 | 4000/5A | 30VA |
| XS04-525155S000000 | 5000/5A | 30VA |

| Cat No. | Ratio | VA at CL 1.0 |
|---|---|---|
| XS04-395141S000000 | 1000/5A | 20VA |
| XS04-405141S000000 | 1200/5A | 20VA |
| XS04-415141S000000 | 1250/5A | 20VA |
| XS04-425151S000000 | 1500/5A | 30VA |
| XS04-435151S000000 | 1600/5A | 30VA |
| XS04-445151S000000 | 2000/5A | 30VA |
| XS04-465151S000000 | 2500/5A | 30VA |
| XS04-485161S000000 | 3000/5A | 45VA |
| XS04-515161S000000 | 4000/5A | 45VA |
| XS04-525161S000000 | 5000/5A | 45VA |

## Dimensions

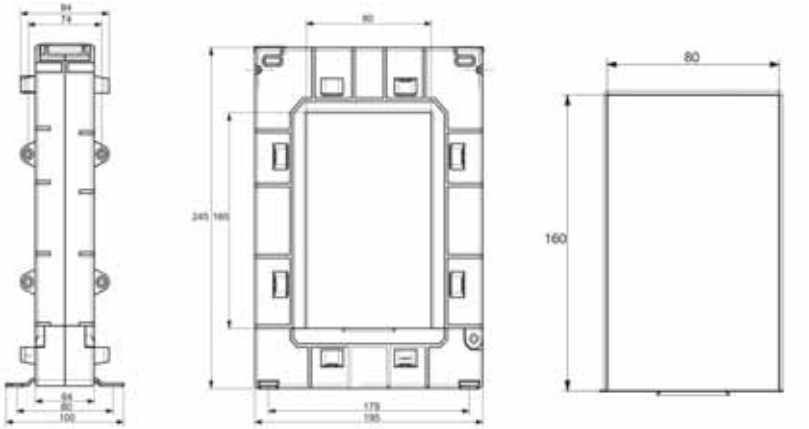


# OMEGA 10D



# OMEGA 10E



## OMEGA 10E (105mm wide x 50mm deep x (55mm x 43mm) I.D.)

| Cat No. | Ratio | VA at CL 0.5 |
|---|---|---|
| XS05-245035S000000 | 200/5A | 1.5VA |
| XS05-275055S000000 | 250/5A | 2.5VA |
| XS05-285055S000000 | 300/5A | 2.5VA |
| XS05-315085S000000 | 400/5A | 5.0VA |
| XS05-325085S000000 | 500/5A | 5.0VA |
| XS05-335095S000000 | 600/5A | 6.25VA |
| XS05-375105S000000 | 800/5A | 7.5VA |

| Cat No. | Ratio | VA at CL 1.0 |
|---|---|---|
| XS05-245071S000000 | 200/5A | 3.75VA |
| XS05-275081S000000 | 250/5A | 5VA |
| XS05-285081S000000 | 300/5A | 5VA |
| XS05-315101S000000 | 400/5A | 7.5VA |
| XS05-325101S000000 | 500/5A | 7.5VA |
| XS05-335111S000000 | 600/5A | 10VA |
| XS05-375121S000000 | 800/5A | 12.5VA |

## Dimensions

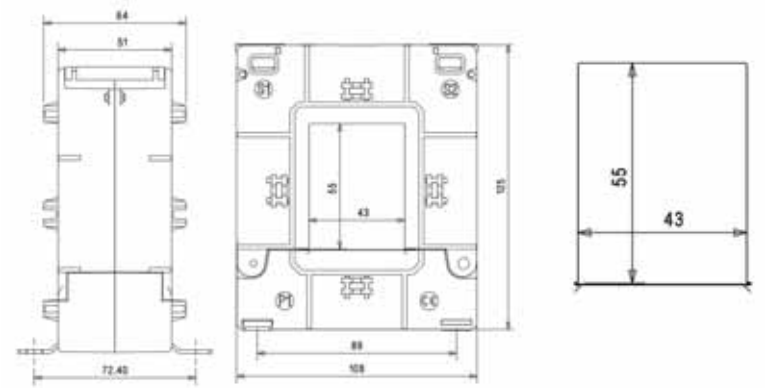

# XMER Moulded Case Range - Class 0.2S

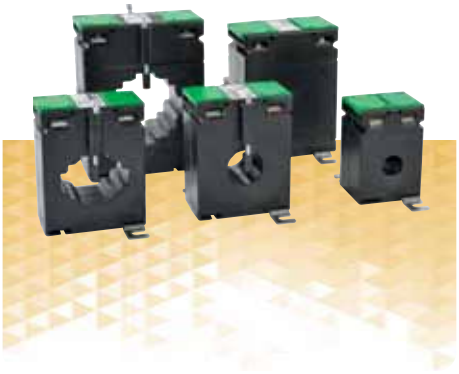

OMEGA XMER

**Features**

- Comprehensive class accuracy
- Cost effective moulded case current transformer
- Various mounting options including wall mounting, cable mounting, bus bar mounting and DIN rail mounting
- 0.2s accuracy class
- Wire sealable terminal covers
- Suitable for tariff metering

## XMER - Class 0.2S

XMER CT's are square type and encapsulated with UL94V-0 approved polycarbonate. These metering CT's feature sealable terminal covers and a wide range of primary current ratings with a high accuracy class suitable for tariff metering applications. Available in various, Bus bar sizes, case widths, and mounting options.

## Specifications

- Primary current 80A to 7500A
- Secondary current 1A or 5A
- Accuracy class 0.2s
- Over current limiting factor FS5, FS10, FS15
- Rated frequency 50Hz or 60Hz
- Rated continuous thermal current (standard) 1,2 x in
- Rated short time thermal current with 60 x in, 1 s (Max 40kA)
- Rated isolation level 0.72/3 kV or 0.72/4 kV
- Place of insulation Indoor
- Altitude up to 2000 m
- Degree of protection IP20
- Degree of pollution 2
- Ambient temperature -5°C to + 55°C (0-95% relative humidity, non condensing!)
- Storage temperature -25°C to + 70°C
- Applied standards IEC 60044-1 / IEC 61869-1 : Performance, IEC - 61010 - 2 : Safety.

# LCTB 62/20



## LCTB 62/20 (62mm Wide x 40mm deep x (20.5x20.5mm) I.D.)

| Cat No. | Ratio | VA at 0.2S |
|---|---|---|
| XM10-185034S000000 | 100/5A | 1.5VA |
| XM10-205034S000000 | 125/5A | 1.5VA |
| XM10-225044S000000 | 150/5A | 2.0VA |
| XM10-245074S000000 | 200/5A | 3.75VA |

| Cat No. | Ratio | VA at 0.2S |
|---|---|---|
| XM10-275074S000000 | 250/5A | 3.75VA |
| XM10-285074S000000 | 300/5A | 3.75VA |
| XM10-315084S000000 | 400/5A | 5VA |

Primary Ratios available from 100A to 400A

## Dimensions

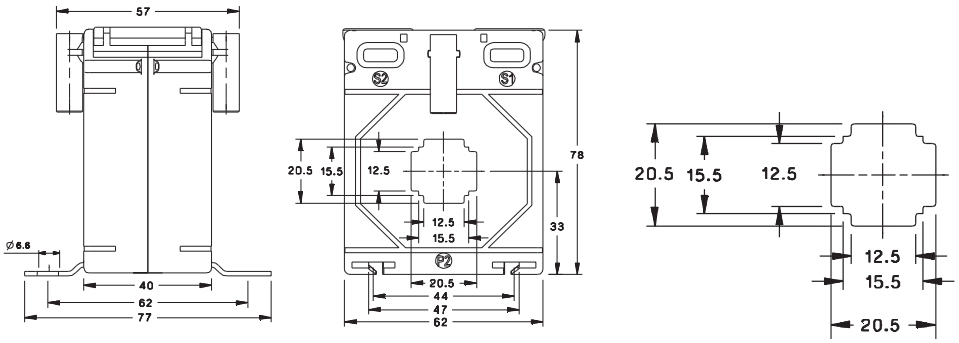


All dimensions are in mm.

NOTE: Please consult Sifam Tinsley on 1A secondary for availability.

**Features given vary from product to product - for more detailed product specific info please visit our website www.sifamtinsley.co.uk**

## LCTB 62/30 (62mm Wide x 40mm deep x (30 x 11mm) I.D.)

# LCTB 62/30

| Cat No. | Ratio | VA at 0.2S |
|---|---|---|
| XM11-185014S000000 | 100/5A | 1VA |
| XM11-205014S000000 | 125/5A | 1VA |
| XM11-225034S000000 | 150/5A | 1.5VA |
| XM11-245054S000000 | 200/5A | 2.5VA |
| XM11-275054S000000 | 250/5A | 2.5VA |

| Cat No. | Ratio | VA at 0.2S |
|---|---|---|
| XM11-285054S000000 | 300/5A | 2.5VA |
| XM11-315074S000000 | 400/5A | 3.75VA |
| XM11-325084S000000 | 500/5A | 5VA |
| XM11-335084S000000 | 600/5A | 5VA |

Primary Ratios available from 100A to 800A



### Dimensions

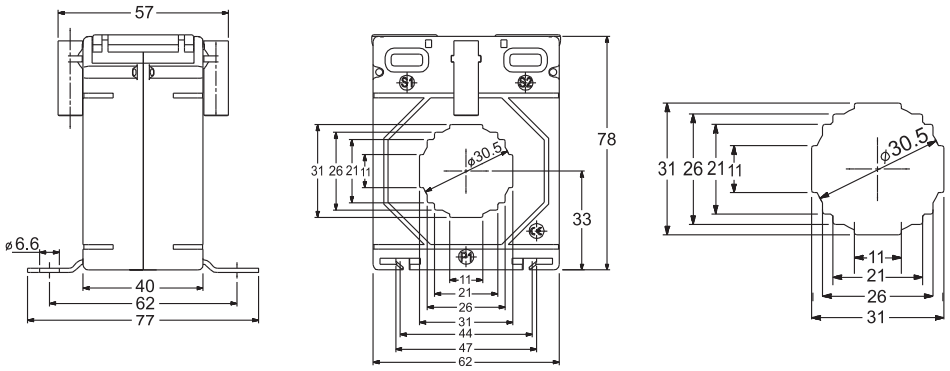


## LCTB 62/30 (50) (62mm wide x 50mm deep x (30 x 11mm) I.D.)

# LTCB 62/30 (50)

| Cat No. | Ratio | VA at 0.2S |
|---|---|---|
| XM12-185034S000000 | 100/5A | 1.25VA |
| XM12-205034S000000 | 125/5A | 1.25VA |
| XM12-225044S000000 | 150/5A | 2VA |
| XM12-245064S000000 | 200/5A | 3VA |
| XM12-275064S000000 | 250/5A | 3VA |
| XM12-285064S000000 | 300/5A | 3VA |

| Cat No. | Ratio | VA at 0.2S |
|---|---|---|
| XM12-315084S000000 | 400/5A | 5VA |
| XM12-325084S000000 | 500/5A | 5VA |
| XM12-335094S000000 | 600/5A | 6.25VA |
| XM12-365094S000000 | 750/5A | 6.25VA |
| XM12-375094S000000 | 800/5A | 6.25VA |

Primary Ratios available from 100A to 800A



### Dimensions

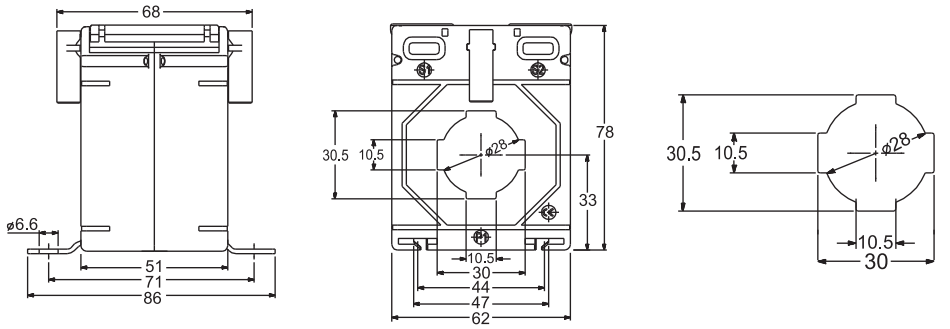

# LCTB 62/40



## LCTB 62/40 (62mm wide x 40mm deep x (40 x 11mm) I.D.)

| Cat No. | Ratio | VA at 0.2S |
|---|---|---|
| XM13-245014S000000 | 200/5A | 1VA |
| XM13-275034S000000 | 250/5A | 1.5VA |
| XM13-285034S000000 | 300/5A | 1.5VA |
| XM13-315054S000000 | 400/5A | 2.5VA |

| Cat No. | Ratio | VA at 0.2S |
|---|---|---|
| XM13-325074S000000 | 500/5A | 3.75VA |
| XM13-335084S000000 | 600/5A | 5VA |
| XM13-365084S000000 | 750/5A | 5VA |
| XM13-375084S000000 | 800/5A | 5VA |

Primary Ratios available from 200A to 800A

### Dimensions

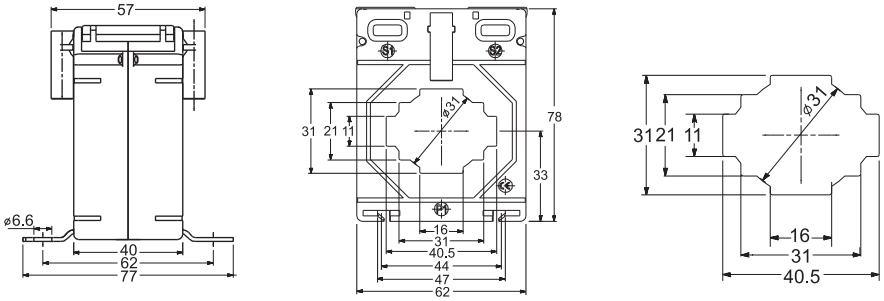


# LCTB 74/20



## LCTB 74/20 (74mm wide x 45mm deep x (20.4mm) I.D.)

| Cat No. | Ratio | VA at 0.2S |
|---|---|---|
| XM14-185085S000000 | 100/5A | 5VA |
| XM14-205085S000000 | 125/5A | 5VA |
| XM14-225105S000000 | 150/5A | 7.5VA |
| XM14-245115S000000 | 200/5A | 10VA |

| Cat No. | Ratio | VA at 0.2S |
|---|---|---|
| XM14-275115S000000 | 250/5A | 10VA |
| XM14-285135S000000 | 300/5A | 15VA |
| XM14-315135S000000 | 400/5A | 15VA |

Primary Ratios available from 80A to 400A

### Dimensions

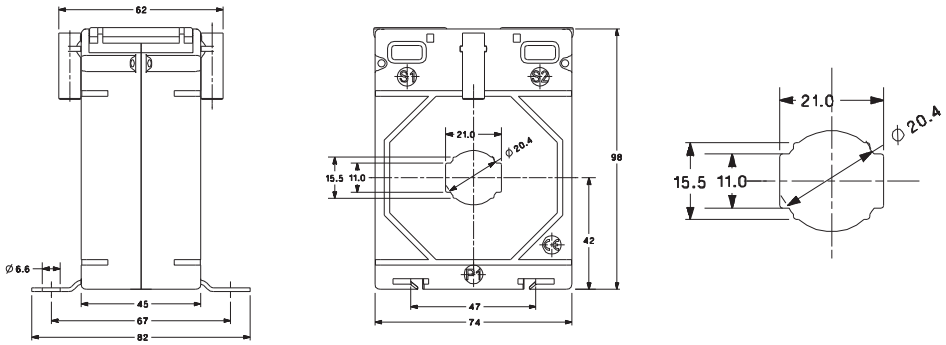


All dimensions are in mm.

NOTE: Please consult Sifam Tinsley on 1A secondary for availability.

**Features given vary from product to product - for more detailed product specific info please visit our website www.sifamtinsley.co.uk**

## LCTB 74/30 (74mm wide x 45mm deep x (31x31mm) I.D.)

# LCTB 74/30

| Cat No. | Ratio | VA at 0.2S |
|---|---|---|
| XM15-185034S000000 | 100/5A | 1.5VA |
| XM15-205034S000000 | 125/5A | 1.5VA |
| XM15-225034S000000 | 150/5A | 1.5VA |
| XM15-245054S000000 | 200/5A | 2.5VA |
| XM15-275054S000000 | 250/5A | 2.5VA |
| XM15-285054S000000 | 300/5A | 2.5VA |

| Cat No. | Ratio | VA at 0.2S |
|---|---|---|
| XM15-315084S000000 | 400/5A | 5VA |
| XM15-325084S000000 | 500/5A | 5VA |
| XM15-335084S000000 | 600/5A | 5VA |
| XM15-365104S000000 | 750/5A | 7.5VA |
| XM15-375114S000000 | 800/5A | 10VA |

Primary Ratios available from 80A to 800A



### Dimensions

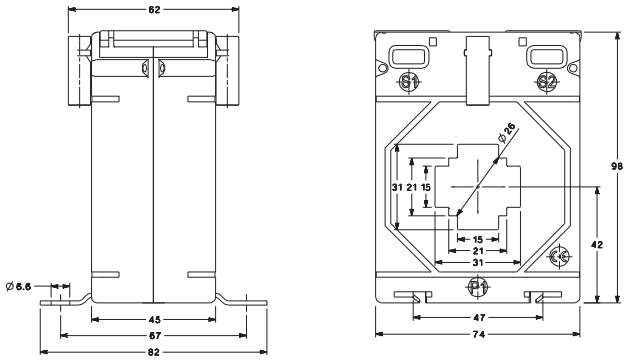


## LCTB 74/40 ((74mm wide x 45mm deep x (41x41mm) I.D.)

# LCTB 74/40

| Cat No. | Ratio | VA at 0.2S |
|---|---|---|
| XM16-245054S000000 | 200/5A | 2.5VA |
| XM16-275054S000000 | 250/5A | 2.5VA |
| XM16-285054S000000 | 300/5A | 2.5VA |
| XM16-315084S000000 | 400/5A | 5VA |
| XM16-325084S000000 | 500/5A | 5VA |

| Cat No. | Ratio | VA at 0.2S |
|---|---|---|
| XM16-335084S000000 | 600/5A | 5VA |
| XM16-365084S000000 | 750/5A | 5VA |
| XM16-375104S000000 | 800/5A | 7.5VA |
| XM16-395114S000000 | 1000/5A | 10VA |

Primary Ratios available from 200A to 1000A



### Dimensions

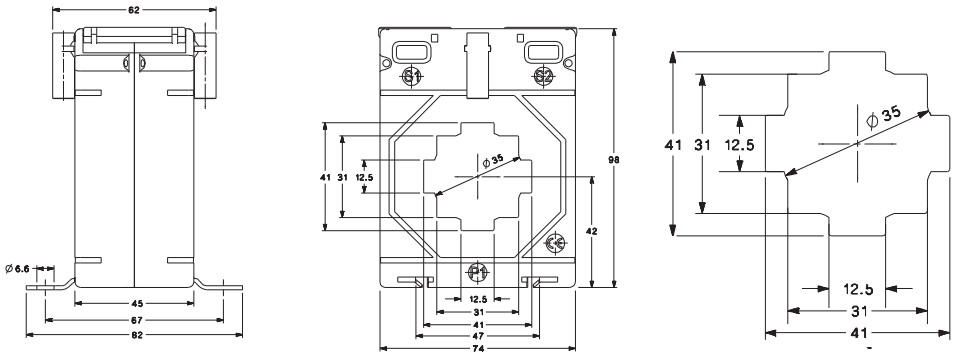

# LCTB 74/50



## LCTB 74/50 ((74mm wide x 45mm deep x (50 x 12mm) I.D.)

| Cat No. | Ratio | VA at 0.2S |
|---|---|---|
| XM17-275034S000000 | 250/5A | 1.5VA |
| XM17-285034S000000 | 300/5A | 1.5VA |
| XM17-315054S000000 | 400/5A | 2.5VA |
| XM17-325084S000000 | 500/5A | 5VA |
| XM17-335084S000000 | 600/5A | 5VA |

| Cat No. | Ratio | VA at 0.2S |
|---|---|---|
| XM17-365084S000000 | 750/5A | 5VA |
| XM17-375084S000000 | 800/5A | 5VA |
| XM17-395084S000000 | 1000/5A | 5VA |

Primary Ratios available from 250A to 1000A

## Dimensions

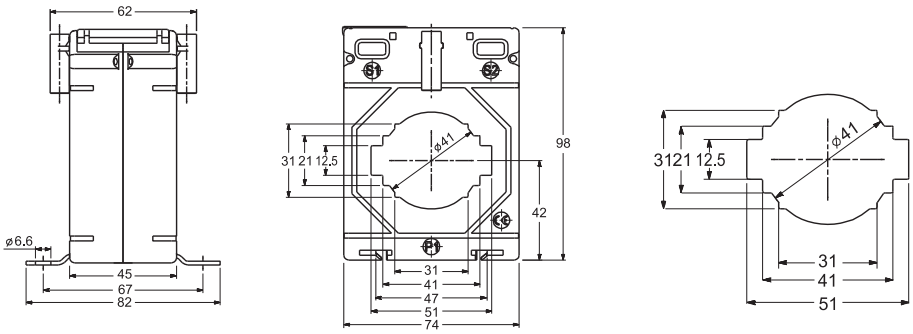


# LCTB 86/40



## LCTB 86/40 (86mm wide x 45mm deep x (41 x 41mm) I.D.)

| Cat No. | Ratio | VA at 0.2S |
|---|---|---|
| XM18-185034S000000 | 100/5A | 1.5VA |
| XM18-205034S000000 | 125/5A | 1.5VA |
| XM18-225054S000000 | 150/5A | 2.5VA |
| XM18-245054S000000 | 200/5A | 2.5VA |
| XM18-275074S000000 | 250/5A | 3.75VA |
| XM18-285074S000000 | 300/5A | 3.75VA |
| XM18-315074S000000 | 400/5A | 3.75VA |

| Cat No. | Ratio | VA at 0.2S |
|---|---|---|
| XM18-325084S000000 | 500/5A | 5VA |
| XM18-335104S000000 | 600/5A | 7.5VA |
| XM18-365104S000000 | 750/5A | 7.5VA |
| XM18-375114S000000 | 800/5A | 10VA |
| XM18-395114S000000 | 1000/5A | 10VA |

Primary Ratios available from 100A to 1000A

## Dimensions

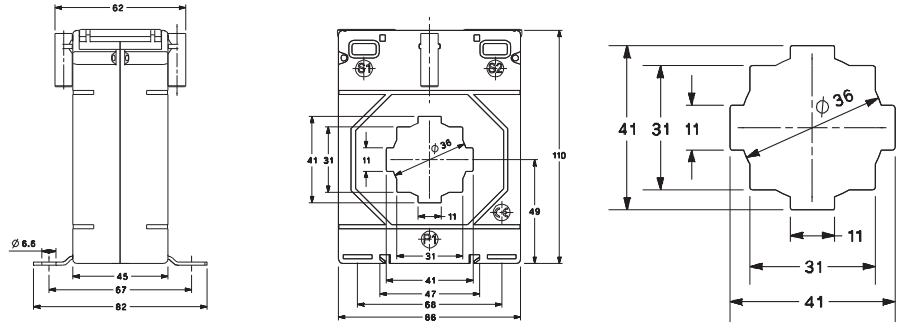


All dimensions are in mm.

NOTE: Please consult Sifam Tinsley on 1A secondary for availability.

**Features given vary from product to product - for more detailed product specific info please visit our website www.sifamtinsley.co.uk**

## LCTB 86/50 (86mm wide x 45mm deep x (51 x 51mm) I.D.)

# LCTB 86/50

| Cat No. | Ratio | VA at 0.2S |
|---|---|---|
| XM19-285034S000000 | 300/5A | 1.5VA |
| XM19-315054S000000 | 400/5A | 2.5VA |
| XM19-325054S000000 | 500/5A | 2.5VA |
| XM19-335084S000000 | 600/5A | 5VA |
| XM19-365104S000000 | 750/5A | 7.5VA |

| Cat No. | Ratio | VA at 0.2S |
|---|---|---|
| TXM19-375114S000000 | 800/5A | 10VA |
| XM19-395124S000000 | 1000/5A | 12.5VA |
| XM19-405124S000000 | 1200/5A | 12.5VA |
| XM19-415124S000000 | 1250/5A | 12.5VA |

Primary Ratios available from 300A to 1250A



### Dimensions

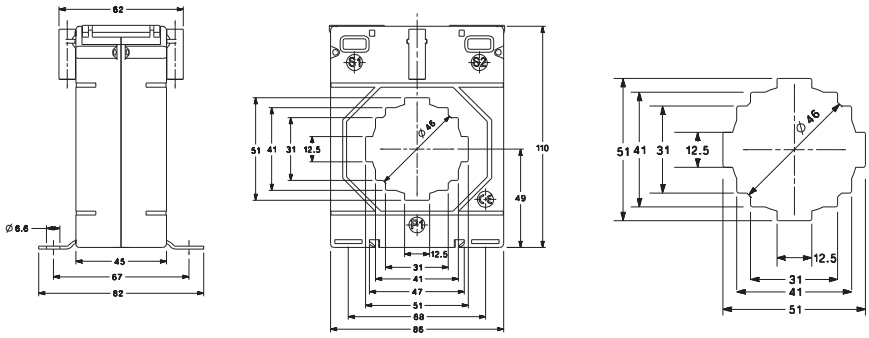


## LCTB 86/60 (86mm wide x 45mm deep x (61 x 51mm) I.D.)

# LCTB 86/60

| Cat No. | Ratio | VA at 0.2S |
|---|---|---|
| XM20-285034S000000 | 300/5A | 1.5VA |
| XM20-315054S000000 | 400/5A | 2.5VA |
| XM20-325054S000000 | 500/5A | 2.5VA |
| XM20-335084S000000 | 600/5A | 5VA |
| XM20-365084S000000 | 750/5A | 5VA |
| XM20-375104S000000 | 800/5A | 7.5VA |

| Cat No. | Ratio | VA at 0.2S |
|---|---|---|
| XM20-395114S000000 | 1000/5A | 10VA |
| XM20-405114S000000 | 1200/5A | 10VA |
| XM20-415114S000000 | 1250/5A | 10VA |
| XM20-425114S000000 | 1500/5A | 10VA |
| XM20-435114S000000 | 1600/5A | 10VA |

Primary Ratios available from 300A to 1600A



### Dimensions

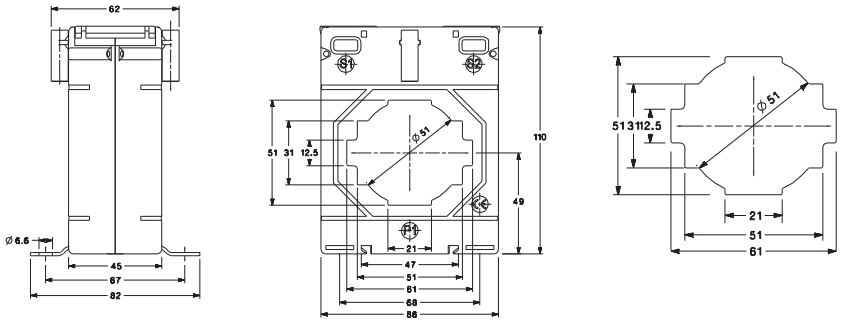

# LCTB 104/60



## LCTB 104/60 (104mm wide x 45mm deep x (60 x 12mm) I.D.)

| Cat No. | Ratio | VA at 0.2S |
|---|---|---|
| XM21-285034S000000 | 300/5A | 1.5VA |
| XM21-315054S000000 | 400/5A | 2.5VA |
| XM21-325074S000000 | 500/5A | 3.75VA |
| XM21-335084S000000 | 600/5A | 5VA |
| XM21-365084S000000 | 750/5A | 5VA |
| XM21-375104S000000 | 800/5A | 7.5VA |

| Cat No. | Ratio | VA at 0.2S |
|---|---|---|
| XM21-395114S000000 | 1000/5A | 10VA |
| XM21-405114S000000 | 1200/5A | 10VA |
| XM21-415114S000000 | 1250/5A | 10VA |
| XM21-425114S000000 | 1500/5A | 10VA |
| XM21-365114S000000 | 1600/5A | 10VA |

Primary Ratios available from 300A to 1600A

## Dimensions

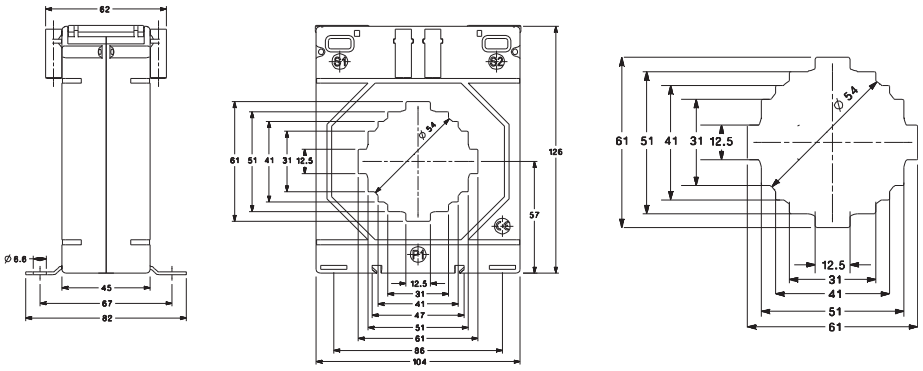


# LCTB 104/80



## LCTB 104/80 (104mm wide x 45mm deep x (80 x 12mm) I.D.)

| Cat No. | Ratio | VA at 0.2S |
|---|---|---|
| XM22-365084S000000 | 750/5A | 5VA |
| XM22-375084S000000 | 800/5A | 5VA |
| XM22-395104S000000 | 1000/5A | 7.5VA |
| XM22-405114S000000 | 1200/5A | 10VA |
| XM22-415114S000000 | 1250/5A | 10VA |

| Cat No. | Ratio | VA at 0.2S |
|---|---|---|
| XM22-425114S000000 | 1500/5A | 10VA |
| XM22-435114S000000 | 1600/5A | 10VA |
| XM22-445114S000000 | 2000/5A | 10VA |

Primary Ratios available from 750A to 2000A

## Dimensions

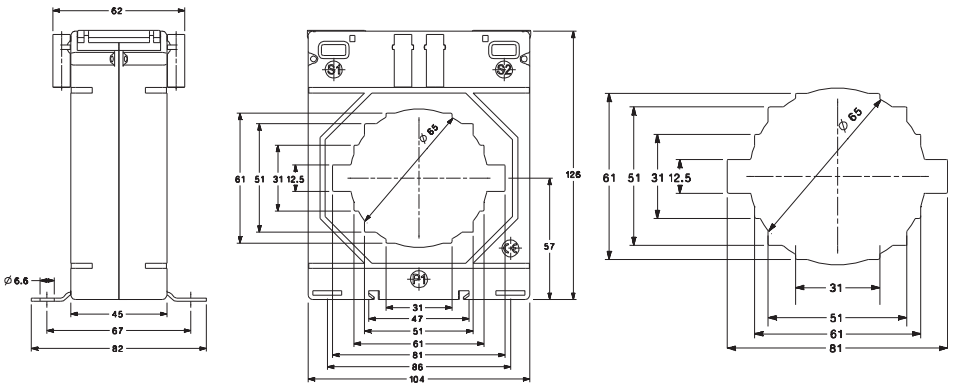


All dimensions are in mm.

NOTE: Please consult Sifam Tinsley on 1A secondary for availability.

**Features given vary from product to product - for more detailed product specific info please visit our website www.sifamtinsley.co.uk**

## LCTB 140/80 (140mm wide x 45mm deep x (80mm x 30mm) I.D.)

# LCTB 140/80

| Cat No. | Ratio | VA at 0.2S |
|---|---|---|
| XM23-325054S000000 | 500/5A | 2.5VA |
| XM23-335074S000000 | 600/5A | 3.75VA |
| XM23-365084S000000 | 750/5A | 5VA |
| XM23-375084S000000 | 800/5A | 5VA |
| XM23-395114S000000 | 1000/5A | 10VA |
| XM23-405124S000000 | 1200/5A | 12.5VA |

| Cat No. | Ratio | VA at 0.2S |
|---|---|---|
| XM23-415124S000000 | 1250/5A | 12.5VA |
| XM23-425134S000000 | 1500/5A | 15VA |
| XM23-435134S000000 | 1600/5A | 15VA |
| XM23-445134S000000 | 2000/5A | 15VA |

Primary Ratios available from 500A to 2000A



### Dimensions

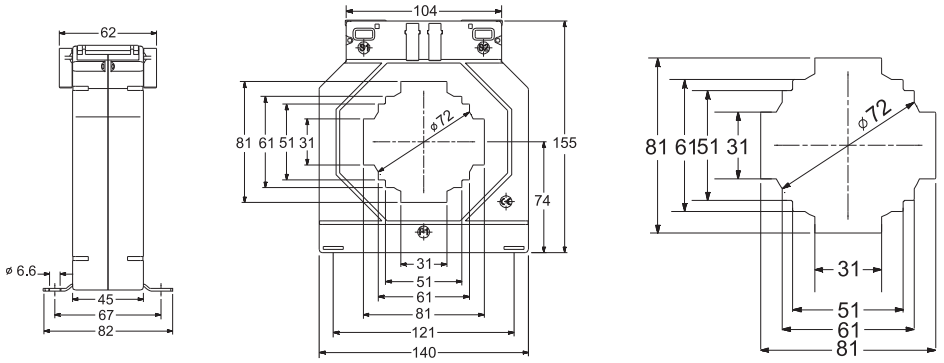


## LCTB 140/100H (140mm wide x 45mm deep x (100 x 30mm) I.D.)

# LCTB 140/100H

| Cat No. | Ratio | VA at 0.2S |
|---|---|---|
| XM24-335054S000000 | 600/5A | 2.5VA |
| XM24-365084S000000 | 750/5A | 5VA |
| XM24-375084S000000 | 800/5A | 5VA |
| XM24-395084S000000 | 1000/5A | 5VA |
| XM24-405114S000000 | 1200/5A | 10VA |
| XM24-415114S000000 | 1250/5A | 10VA |
| XM24-425134S000000 | 1500/5A | 15VA |

| Cat No. | Ratio | VA at 0.2S |
|---|---|---|
| XM24-435134S000000 | 1600/5A | 15VA |
| XM24-445134S000000 | 2000/5A | 15VA |
| XM24-466134S000000 | 2500/5A | 15VA |
| XM24-485134S000000 | 3000/5A | 15VA |
| XM24-515134S000000 | 4000/5A | 15VA |

Primary Ratios available from 600A to 4000A

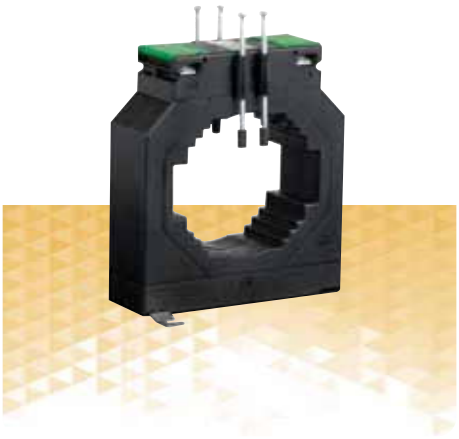

### Dimensions

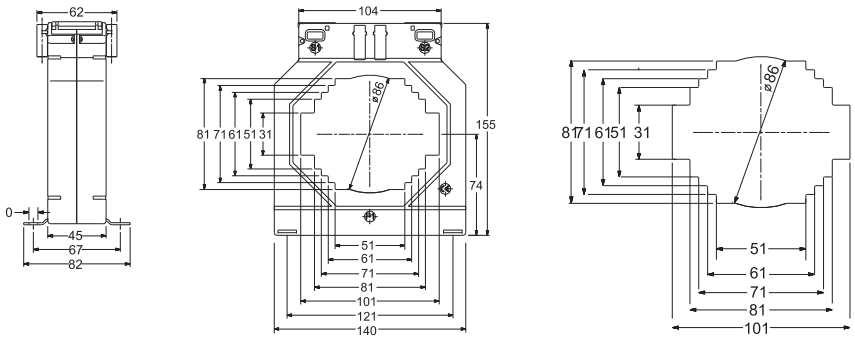

# LCTB 140/100V



## LCTB 140/100V (140mm wide x 45mm deep x (81 x 101mm) I.D.)

| Cat No. | Ratio | VA at 0.2S |
|---|---|---|
| XM25-335054S000000 | 600/5A | 2.5VA |
| XM25-365084S000000 | 750/5A | 5VA |
| XM25-375084S000000 | 800/5A | 5VA |
| XM25-395084S000000 | 1000/5A | 5VA |
| XM25-405114S000000 | 1200/5A | 10VA |
| XM25-415114S000000 | 1250/5A | 10VA |

| Cat No. | Ratio | VA at 0.2S |
|---|---|---|
| XM25-425134S000000 | 1500/5A | 15VA |
| XM25-435134S000000 | 1600/5A | 15VA |
| XM25-445134S000000 | 2000/5A | 15VA |
| XM25-466134S000000 | 2500/5A | 15VA |
| XM25-485134S000000 | 3000/5A | 15VA |

Primary Ratios available from 200A to 3000A

## Dimensions

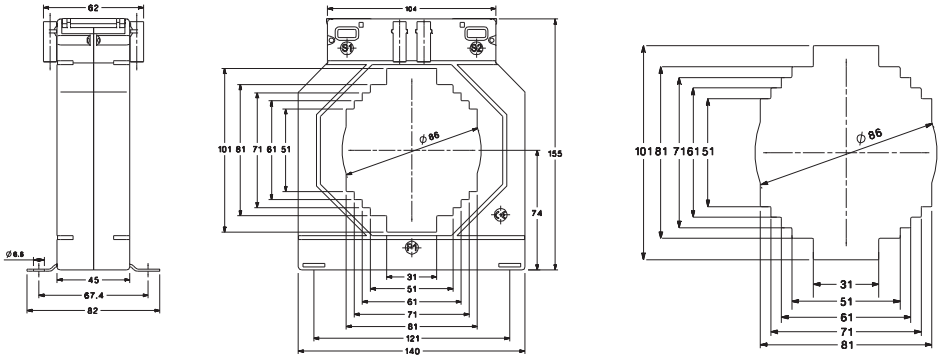


# LCTB 100/100V



## LCTB 100/100V (140mm wide x 45mm deep x (41 x 103mm) I.D.)

| Cat No. | Ratio | VA at 0.2S |
|---|---|---|
| XR01-405084S000000 | 1200/5A | 5VA |
| XR01-415084S000000 | 1250/5A | 5VA |
| XR01-425084S000000 | 1500/5A | 5VA |
| XR01-435104S000000 | 1600/5A | 7.5VA |

| Cat No. | Ratio | VA at 0.2S |
|---|---|---|
| XR01-445104S000000 | 2000/5A | 7.5VA |
| XR01-466114S000000 | 2500/5A | 10VA |
| XR01-465114S000000 | 2500/5A | 10VA |

Primary Ratios available from 1200A to 2500A

## Dimensions

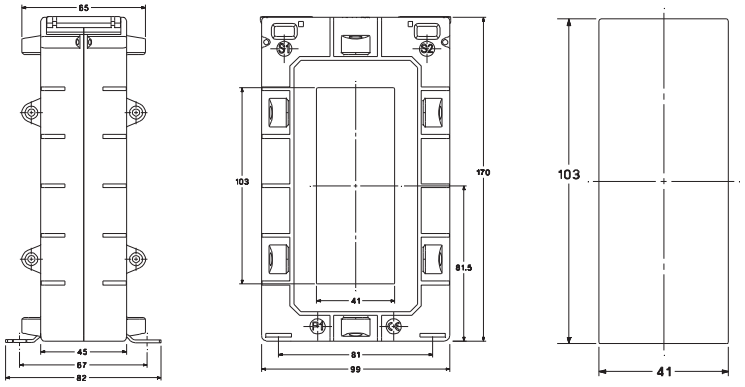


All dimensions are in mm.

NOTE: Please consult Sifam Tinsley on 1A secondary for availability.

**Features given vary from product to product - for more detailed product specific info please visit our website www.sifamtinsley.co.uk**

## LCTB 225/125 (225mm wide x 50mm deep x (125mm x 93mm) I.D.)

# LCTB 225/125

| Cat No. | Ratio | VA at 0.2S |
|---|---|---|
| XR04-395084S000000 | 1000/5A | 5VA |
| XR04-405084S000000 | 1200/5A | 5VA |
| XR04-415084S000000 | 1250/5A | 5VA |
| XR04-425104S000000 | 1500/5A | 7.5VA |
| XR04-435104S000000 | 1600/5A | 7.5VA |
| XR04-445114S000000 | 2000/5A | 10VA |

| Cat No. | Ratio | VA at 0.2S |
|---|---|---|
| XR04-465114S000000 | 2500/5A | 10VA |
| XR04-485114S000000 | 3000/5A | 10VA |
| XR04-515134S000000 | 4000/5A | 15VA |
| XR04-525134S000000 | 5000/5A | 15VA |
| XR04-535134S000000 | 6000/5A | 15VA |

Primary Ratios available from 1000A to 6000A

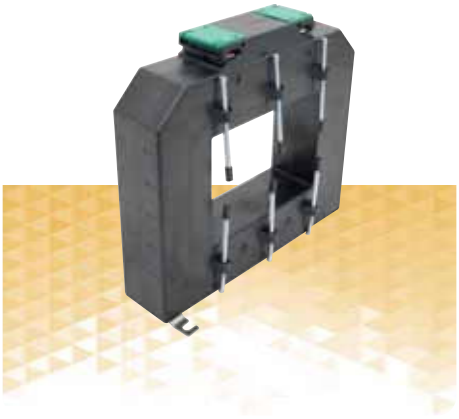

### Dimensions

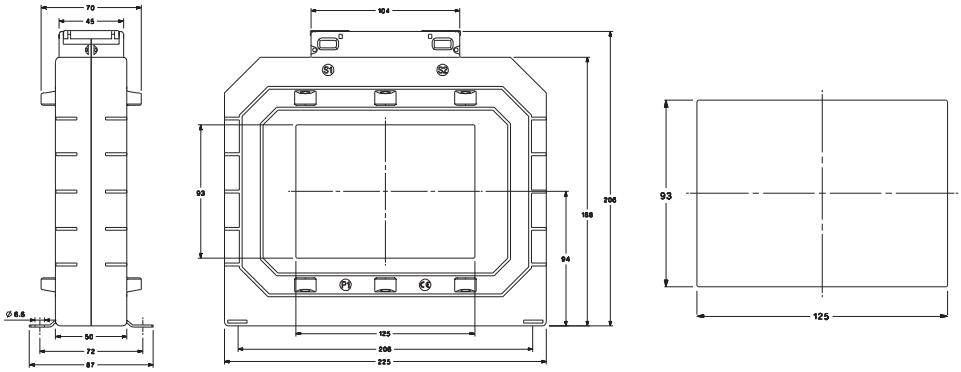


## LCTB 225/167 (225mm wide x 50mm deep x (167mm x 66mm) I.D.)

# LCTB 225/167

| Cat No. | Ratio | VA at 0.2S |
|---|---|---|
| XR05-425084S000000 | 1500/5A | 5VA |
| XR05-435084S000000 | 1600/5A | 5VA |
| XR05-445104S000000 | 2000/5A | 7.5VA |
| XR05-465114S000000 | 2500/5A | 10VA |
| XR05-485114S000000 | 3000/5A | 10VA |

| Cat No. | Ratio | VA at 0.2S |
|---|---|---|
| XR05-515114S000000 | 4000/5A | 10VA |
| XR05-525134S000000 | 5000/5A | 15VA |
| XR05-535134S000000 | 6000/5A | 15VA |
| XR05-545134S000000 | 7500/5A | 15VA |

Primary Ratios available from 1500A to 7500A

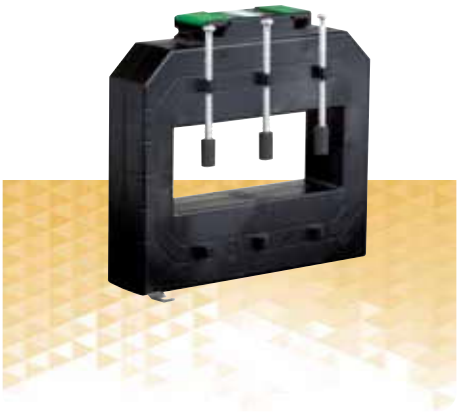

### Dimensions

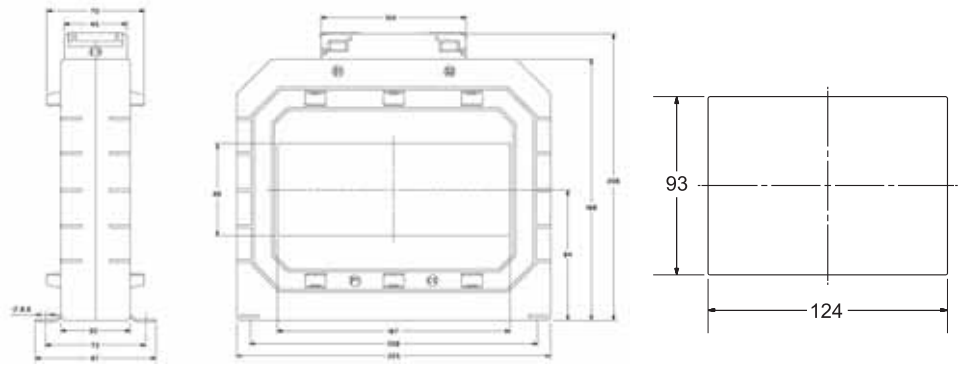

# LCTB 130/100V



## LCTB 130/100V (140mm wide x 45mm deep x (101 x 56mm) I.D.)

| Cat No. | Ratio | VA at 0.2S |
|---|---|---|
| XR06-335054S000000 | 600/5A | 2.5VA |
| XR06-365084S000000 | 750/5A | 5VA |
| XR06-375114S000000 | 800/5A | 10VA |
| XR06-395114S000000 | 1000/5A | 10VA |
| XR06-405114S000000 | 1200/5A | 10VA |
| XR06-415114S000000 | 1250/5A | 10VA |

| Cat No. | Ratio | VA at 0.2S |
|---|---|---|
| XR06-425114S000000 | 1500/5A | 10VA |
| XR06-435114S000000 | 1600/5A | 10VA |
| XR06-445114S000000 | 2000/5A | 10VA |
| XR06-465114S000000 | 2500/5A | 10VA |
| XR06-485124S000000 | 3000/5A | 12.5VA |

Primary Ratios available from 600A to 3000A

## Dimensions

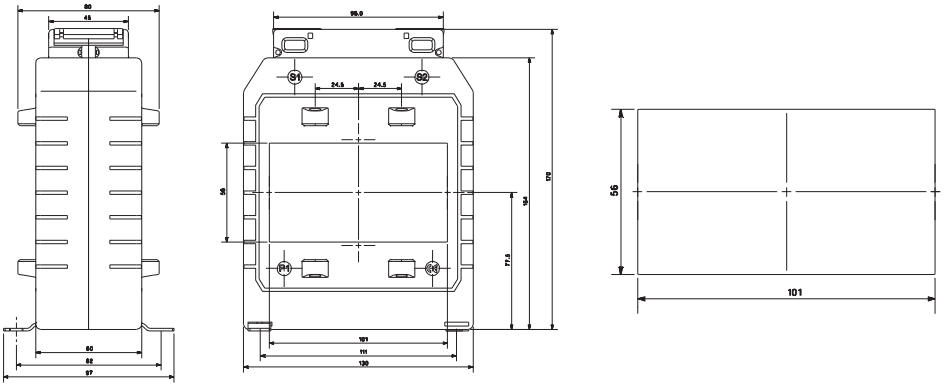


All dimensions are in mm.

NOTE: Please consult Sifam Tinsley on 1A secondary for availability.

**Features given vary from product to product - for more detailed product specific info please visit our website www.sifamtinsley.co.uk**

# OMEGA Ring Type

## OMEGA 20 (TW CT's)

Sifam Tinsley's Omega TW series round type CT's are housed in robust case with classical finish. The case is made of polycarbonate, which is flame retardant and non-drip and confirms to international regulations UL 94 V-0.



## Specifications

- System voltage: 720V (0.72kV) maximum
- Test voltage: 4kV for 1 minute
- System frequency: 50 or 60 Hz
- Insulation class: E
- Overload withstand: 1.2 times rated current continuously
- Short circuit thermal: 100 x rated primary for 1 second
- Operating temperature: 20°C to 55°C
- Relative humidity: 0-90% (non condensing)
- Compliant with: IEC 60044-1. Bs7626
- Accuracy: Class 3, 1, 0.5, 0.2 & 0.25
- Rated dynamic current: = 2.55 x 1ht
- Enclosure: Flame retardant grade classified UL 94V-O

### Features

- Available in 0.2S, 0.2, 0.5S, 0.5, 1, 3, 5 accuracy classes
- Cost effective polycarbonate case current transformer
- Wide range of sizes available for different bus bar sizes
- Various mounting options which include wall mounting, bus bar mounting, DIN rail mounting
- Wire sealable terminal covers



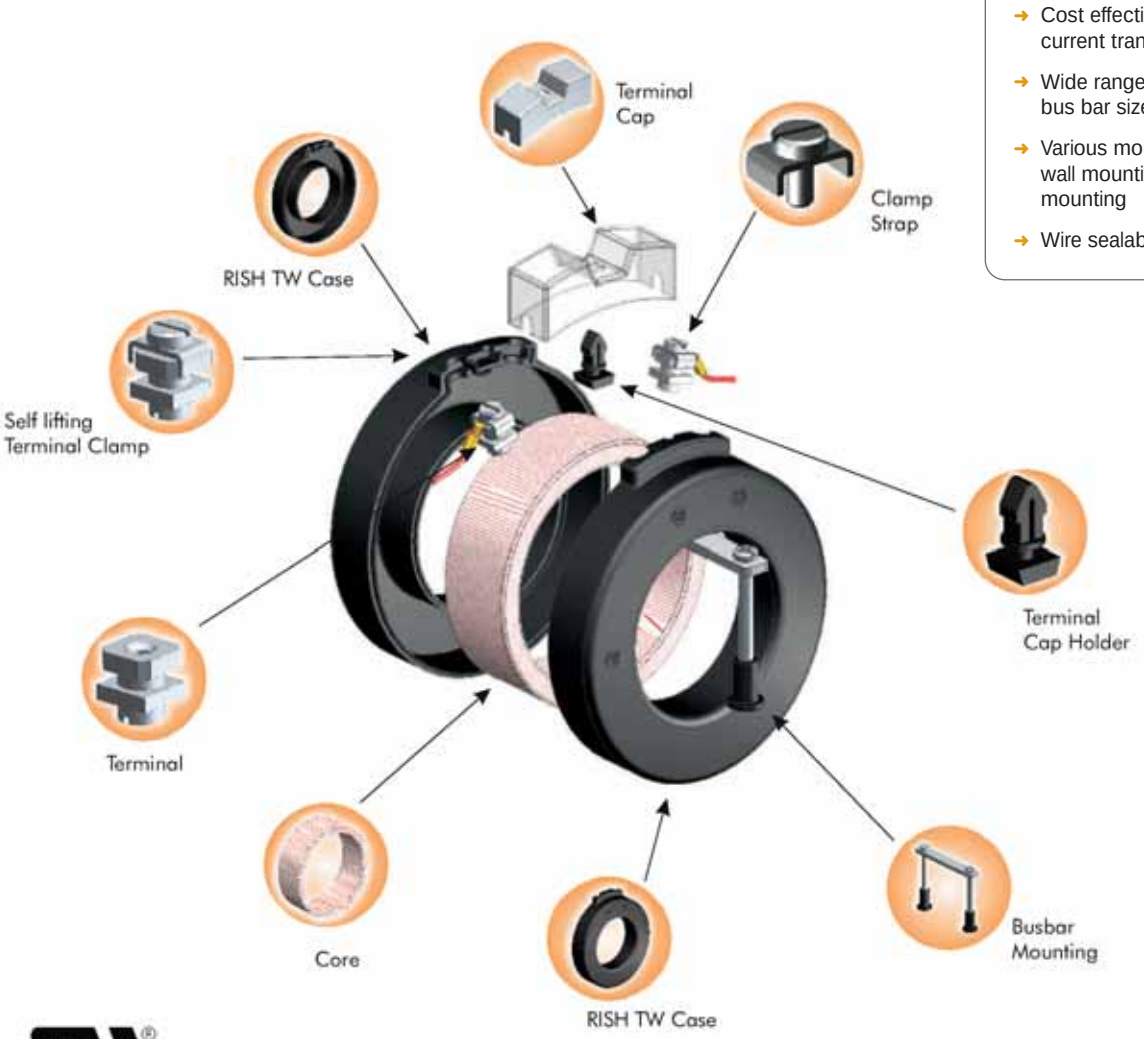


c UL us
File No. E471457

# OMEGA 20A



## OMEGA 20A (73mm O.D. x 40mm deep x 30mm I.D.)

| Cat No. | Ratio | VA at CL 0.5 |
|---|---|---|
| TW01-185035S000000 | 100/5A | 1.5VA |
| TW01-195035S000000 | 120/5A | 1.5VA |
| TW01-205055S000000 | 125/5A | 2.5VA |
| TW01-225055S000000 | 150/5A | 2.5VA |
| TW01-245085S000000 | 200/5A | 5VA |

| Cat No. | Ratio | VA at CL 1.0 |
|---|---|---|
| TW01-135031S000000 | 50/5A | 1.5VA |
| TW01-145031S000000 | 60/5A | 1.5VA |
| TW01-165031S000000 | 75/5A | 1.5VA |
| TW01-185051S000000 | 100/5A | 2.5VA |
| TW01-195051S000000 | 120/5A | 2.5VA |

***More ratios available**

## Dimensions

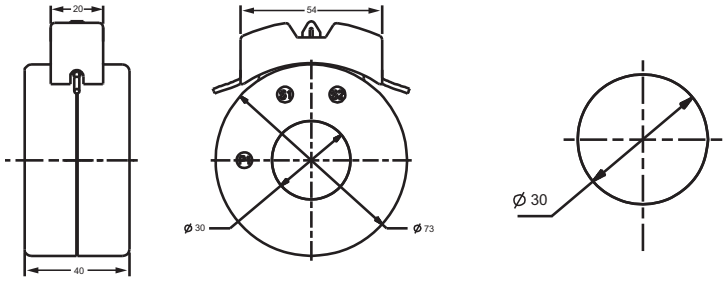


# OMEGA 20B



## OMEGA 20B (73mm O.D. x 50mm deep x 30mm I.D.)

| Cat No. | Ratio | VA at CL 0.5 |
|---|---|---|
| TW02-165035S000000 | 75/5A | 1.5VA |
| TW02-165035S000000 | 100/5A | 2.5VA |
| TW02-195055S000000 | 120/5A | 2.5VA |
| TW02-205055S000000 | 125/5A | 2.5VA |
| TW02-225085S000000 | 150/5A | 5VA |
| TW02-245115S000000 | 200/5A | 10VA |

| Cat No. | Ratio | VA at CL 1.0 |
|---|---|---|
| TW02-165051S000000 | 75/5A | 2.5VA |
| TW02-185081S000000 | 100/5A | 5VA |
| TW02-195081S000000 | 120/5A | 5VA |
| TW02-205081S000000 | 125/5A | 5VA |
| TW02-225111S000000 | 150/5A | 10VA |
| TW02-245131S000000 | 200/5A | 15VA |

***More ratios available**

## Dimensions

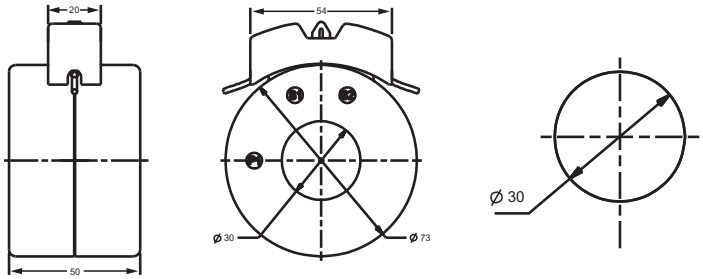


All dimensions are in mm

**Features given vary from product to product - for more detailed product specific info please visit our website www.sifamtinsley.co.uk**

## OMEGA 20C (92mm O.D. x 41mm deep x 43mm I.D.)

| Cat No. | Ratio | VA at CL 0.5 |
|---|---|---|
| TW03-205015S000000 | 125/5A | 1VA |
| TW03-225035S000000 | 150/5A | 1.5VA |
| TW03-245085S000000 | 200/5A | 5VA |
| TW03-275105S000000 | 250/5A | 7.5VA |
| TW03-285115S000000 | 500/5A | 10VA |

| Cat No. | Ratio | VA at CL 1.0 |
|---|---|---|
| TW03-205051S000000 | 125/5A | 2.5VA |
| TW03-225071S000000 | 150/5A | 3.75VA |
| TW03-245111S000000 | 200/5A | 10VA |
| TW03-275131S000000 | 250/5A | 15VA |
| TW03-285141S000000 | 300/5A | 20VA |

***More ratios available**

## Dimensions

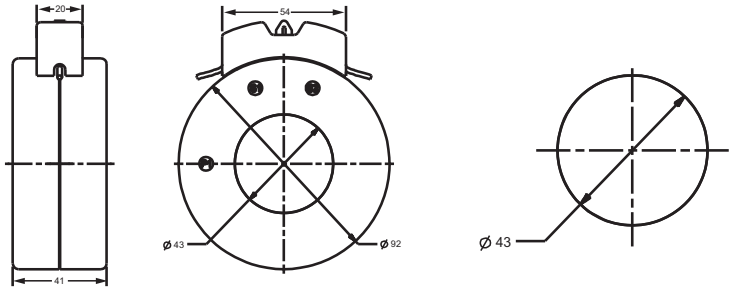


## OMEGA 20C



## OMEGA 20D (100mm O.D. x 41mm deep x 58mm I.D.)

| Cat No. | Ratio | VA at CL 0.5 |
|---|---|---|
| TW04-275075S000000 | 250/5A | 3.75VA |
| TW04-285085S000000 | 300/5A | 5VA |
| TW04-315115S000000 | 400/5A | 10VA |
| TW04-325135S000000 | 500/5A | 15VA |
| TW04-335135S000000 | 600/5A | 15VA |

| Cat No. | Ratio | VA at CL 1.0 |
|---|---|---|
| TW04-275101S000000 | 250/5A | 7.5VA |
| TW04-285111S000000 | 300/5A | 10VA |
| TW04-315141S000000 | 400/5A | 20VA |
| TW04-325201S000000 | 500/5A | 25VA |
| TW04-335201S000000 | 600/5A | 25VA |

***More ratios available**

## Dimensions

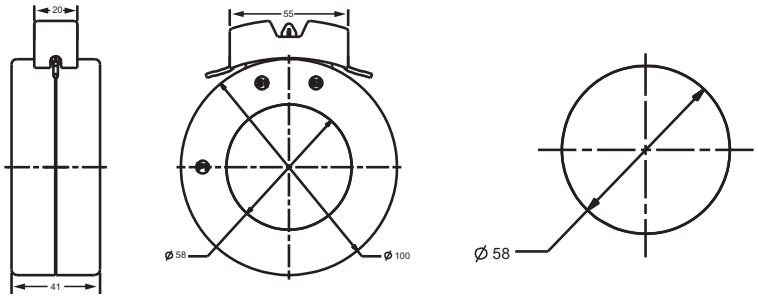


## OMEGA 20D



# OMEGA 20E



## OMEGA 20E (110mm O.D. x 41mm deep x 72mm I.D.)

| Cat No. | Ratio | VA at CL 0.5 |
|---|---|---|
| TW05-315105S000000 | 400/5A | 7.5VA |
| TW05-325115S000000 | 500/5A | 10VA |
| TW05-335115S000000 | 600/5A | 10VA |
| TW05-375135S000000 | 800/5A | 15VA |
| TW05-395135S000000 | 1000/5A | 15VA |

| Cat No. | Ratio | VA at CL 1.0 |
|---|---|---|
| TW05-315121S000000 | 400/5A | 12.5VA |
| TW05-325131S000000 | 500/5A | 15VA |
| TW05-335131S000000 | 600/5A | 15VA |
| TW05-375151S000000 | 800/5A | 30VA |
| TW05-395151S000000 | 1000/5A | 30VA |

***More ratios available**

### Dimensions

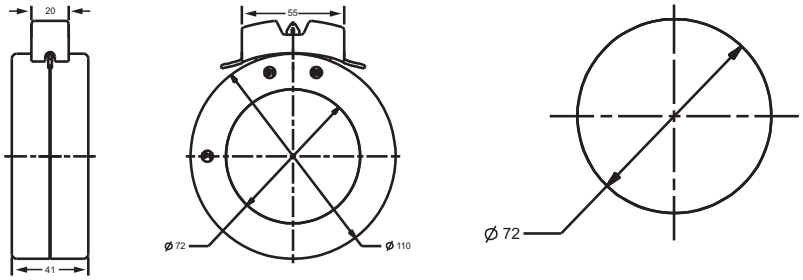


# OMEGA 20F



## OMEGA 20F (159mm O.D. x 40mm deep x 113mm I.D.)

| Cat No. | Ratio | VA at CL 0.5 |
|---|---|---|
| TW06-395115S000000 | 1000/5A | 10VA |
| TW06-405145S000000 | 1200/5A | 20VA |
| TW06-415145S000000 | 1250/5A | 20VA |
| TW06-425145S000000 | 1500/5A | 20VA |
| TW06-435145S000000 | 1600/5A | 20VA |
| TW06-445205S000000 | 2000/5A | 25VA |
| TW06-465205S000000 | 2500/5A | 25VA |
| TW06-485155S000000 | 3000/5A | 30VA |
| TW06-495155S000000 | 3500/5A | 30VA |

| Cat No. | Ratio | VA at CL 1.0 |
|---|---|---|
| TW06-395131S000000 | 1000/5A | 15VA |
| TW06-405151S000000 | 1200/5A | 30VA |
| TW06-415151S000000 | 1250/5A | 30VA |
| TW06-425151S000000 | 1500/5A | 30VA |
| TW06-435151S000000 | 1600/5A | 30VA |
| TW06-445161S000000 | 2000/5A | 45VA |
| TW06-465161S000000 | 2500/5A | 45VA |
| TW06-485161S000000 | 3000/5A | 45VA |
| TW06-495161S000000 | 3200/5A | 45VA |

***More ratios available**

### Dimensions

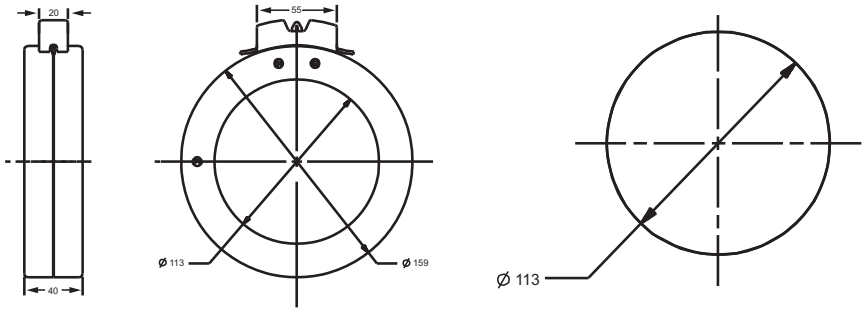


All dimensions are in mm

**Features given vary from product to product - for more detailed product specific info please visit our website www.sifamtinsley.co.uk**

# OMEGA ANSI Type

The ANSI Metering Class transformers are intended for power monitoring applications where high accuracy and minimum phase angle error are required. They are specially designed to be compliant with relevant ANSI standards.

## Specifications

- Applicable standard : ANSI/IEEE C57.13
- Case: 10% glass filled polycarbonate, flame retardant grades classified UL 94V-0
- Insulation Level: 600 Volts, 10KV BIL full wave
- Non-standard length possible if specified
- For all the SHT & SFT types terminals are brass studs No. 8-32 with one flat washer, lock washer & regular nut
- All the SHT & SFT models also available as SHL & SFL with leads
- For all the SHT types mounting bracket kit when required.

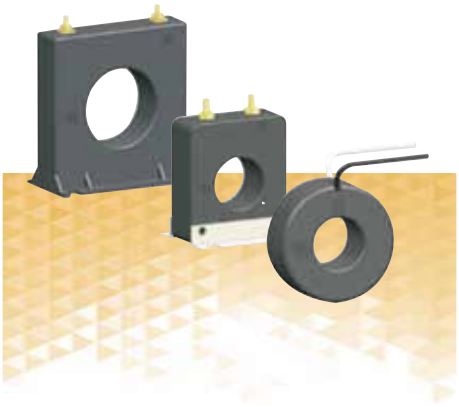

OMEGA ANSI Type

### Features

- Applicable standard : ANSI/IEEE C57.13
- Case: 10% glass filled polycarbonate, flame retardant grades classified UL 94V-0.
- Insulation Level: 600 Volts, 10KV BIL full wave
- Non-standard length possible if specified
- For all the SHT & SFT types terminals are brass studs No. 8-32 with one flat washer, lock washer & regular nut
- All the SHT & SFT models also available as SHL & SFL with leads
- For all the SHT types mounting bracket kit when required.

## Omega 30A (2NSFT, 2NSHT & 2NRL Series)

| Cat No. | Ratio | VA |
|---|---|---|
| 50 | ± 3% | 1.5 |
| 60 | ± 3% | 2.0 |
| 75 | ± 2% | 2.0 |
| 80 | ± 2% | 2.0 |
| 100 | ± 1% | 2.0 |
| 120 | ± 1% | 2.5 |

| Cat No. | Ratio | VA |
|---|---|---|
| 125 | ± 1% | 2.5 |
| 150 | ± 1% | 4.0 |
| 200 | ± 1% | 4.0 |
| 250 | ± 1% | 6.0 |
| 300 | ± 1% | 8.0 |

Used for ammeter only. Approx. weight 0.5lbs.

## Dimensions

**2NSFT**

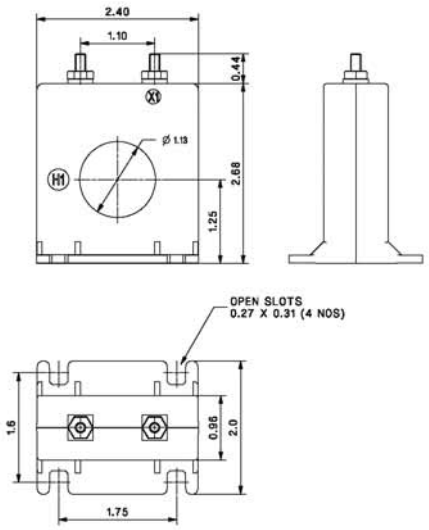


**2NSHT**

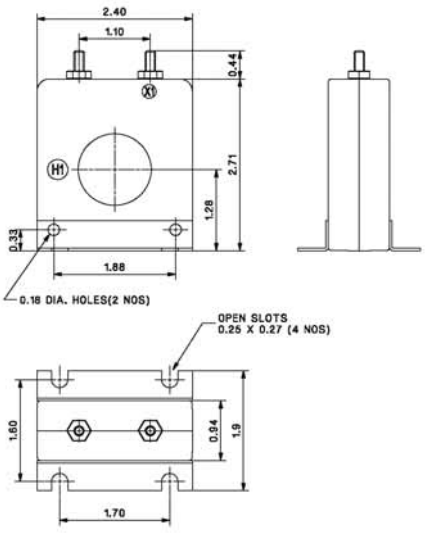


## OMEGA 30A

2NSFT & 2NSHT



# OMEGA 30A
## 2NRL & 2NDRL



## Omega 30A (2NDRL Series)

| Cat No. | Ratio | VA |
|---|---|---|
| 50 | ± 2% | 1.5 |
| 60 | ± 2% | 2.0 |
| 75 | ± 2% | 3.0 |
| 80 | ± 2% | 4.0 |
| 100 | ± 1% | 5.0 |
| 120 | ± 1% | 5.0 |

| Cat No. | Ratio | VA |
|---|---|---|
| 125 | ± 1% | 5.0 |
| 200 | ± 1% | 10 |
| 250 | ± 1% | 12.5 |
| 300 | ± 1% | 15 |

Used for ammeter only. Approx. weight 0.5lbs.

## Dimensions - 2NDRL

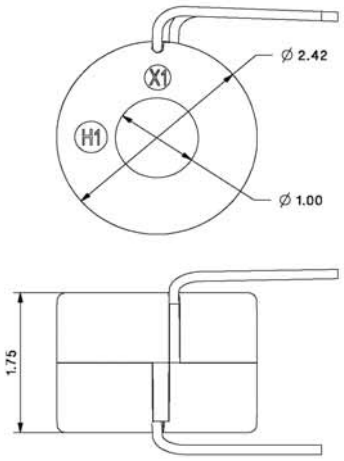


## 2NRL

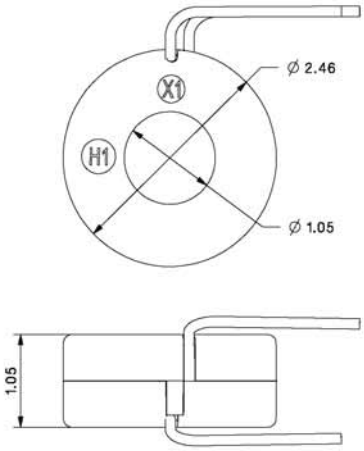


# OMEGA 30A
## 2ADRL



## Omega 30A (2ADRL Series)

| Current Ratio | VA at ±1% Class | ANSI Metering Class B0.1 | B0.1 | B0.5 |
|---|---|---|---|---|
| 50 | 2% 2.5 | 4.8 | - | - |
| 60 | 2.5 | 1.2 | - | - |
| 75 | 3.5 | 1.2 | 2.4 | - |
| 80 | 4.0 | 1.2 | 2.4 | - |
| 100 | 5.0 | 1.2 | 2.4 | - |
| 120 | 5.0 | 1.2 | 2.4 | - |
| 125 | 5.0 | 0.6 | 1.2 | - |
| 150 | 10 | 0.6 | 0.6 | - |
| 200 | 12.5 | 0.3 | 0.6 | 1.2 |
| 250 | 15 | 0.3 | 0.3 | 0.6 |
| 300 | 20 | 0.3 | 0.3 | 0.6 |

## Dimensions
**2ADRL**

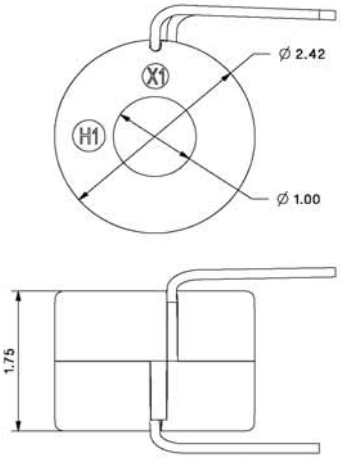


Used for ammeter, Wattmeters & cross current compensation
Approx. weight 0.5lbs

All dimensions are in mm

**Features given vary from product to product - for more detailed product specific info please visit our website www.sifamtinsley.co.uk**

## Omega 30B (5NSFT, 5NSHT & 5NRL Series)

| Cat No. | Ratio | VA |
|---|---|---|
| 50 | ± 2% | 1.0 |
| 75 | ± 2% | 1.5 |
| 100 | ± 2% | 2.0 |
| 150 | ± 1% | 5.0 |
| 200 | ± 1% | 5.0 |
| 250 | ± 1% | 10 |
| 300 | ± 1% | 12.5 |

| Cat No. | Ratio | VA |
|---|---|---|
| 400 | ± 1% | 12.5 |
| 500 | ± 1% | 20 |
| 600 | ± 1% | 25 |
| 750 | ± 1% | 25 |
| 800 | ± 1% | 25 |
| 1000 | ± 1% | 25 |
| 1200 | ± 1% | 30.5 |

Used for ammeter, Wattmeters & cross current compensation. Approx. weight 1 lbs.

## Dimensions

**5NSFT**

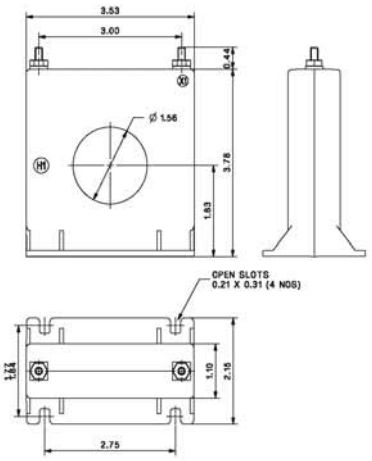


**5NSHT**

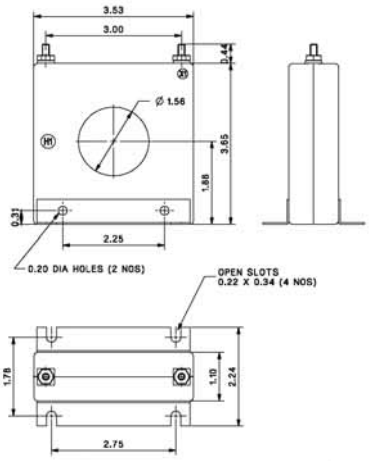


**5NRL**

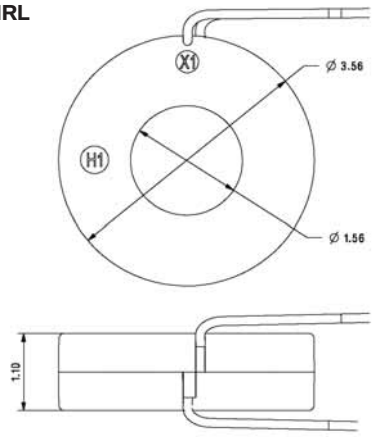


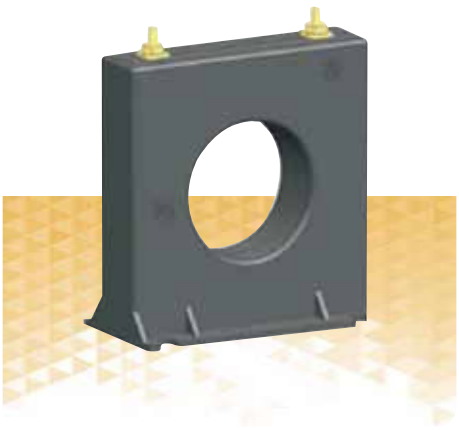

OMEGA 30B
5NSFT

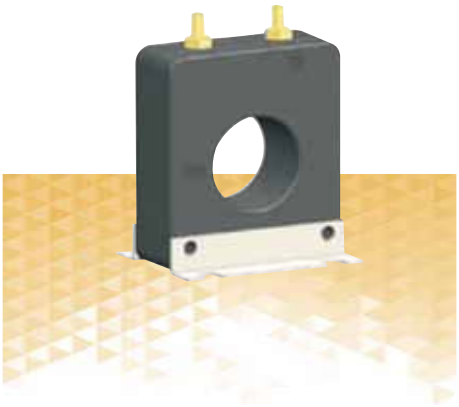

OMEGA 30B
5NSHT



OMEGA 30B
5NRL

# OMEGA 30B
## 5ASFT

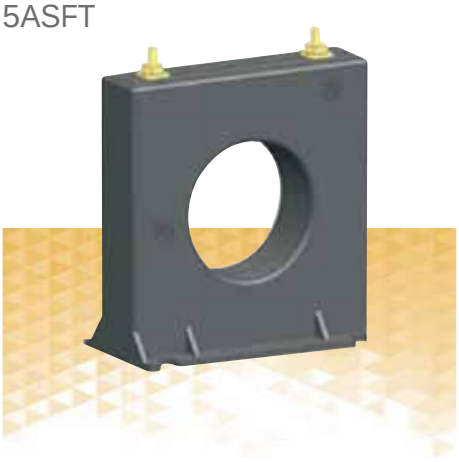

## Omega 30B (5ASFT, 5ASHT & 5ARL Series)

| Current Ratio | VA at ±1% Class | ANSI Metering Class B0.1 | B0.2 | B0.3 | B0.9 | B1.8 | Cont. Thermal RF @30 | @55 |
|---|---|---|---|---|---|---|---|---|
| 50 | 1.0 | 4.8 | - | - | - | - | 2.0 | 2.0 |
| 75 | 1.0 | 2.4 | 4.8 | - | - | - | 2.0 | 2.0 |
| 100 | 1.0 | 1.2 | 2.4 | - | - | - | 2.0 | 2.0 |
| 150 | 5.0 | 0.6 | 1.2 | 2.4 | 4.8 | - | 2.0 | 2.0 |
| 200 | 5.0 | 0.6 | 0.6 | 1.2 | 2.4 | 4.8 | 2.0 | 2.0 |
| 250 | 12.5 | 0.6 | 0.6 | 1.2 | 2.4 | 2.4 | 2.0 | 1.5 |
| 300 | 15 | 0.3 | 0.3 | 0.6 | 1.2 | 2.4 | 2.0 | 1.5 |
| 400 | 20 | 0.3 | 0.3 | 0.6 | 1.2 | 1.2 | 1.5 | 1.0 |
| 500 | 25 | 0.3 | 0.3 | 0.6 | 0.6 | 1.2 | 1.33 | 0.8 |
| 600 | 30 | 0.3 | 0.3 | 0.6 | 0.6 | 1.2 | 1.0 | 0.8 |
| 750 | 30 | 0.3 | 0.3 | 0.6 | 0.6 | 0.6 | 1.0 | 0.8 |
| 800 | 30 | 0.3 | 0.3 | 0.6 | 0.6 | 0.6 | 1.0 | 0.8 |
| 1000 | 35 | 0.3 | 0.3 | 0.3 | 0.6 | 0.6 | 1.0 | 0.8 |
| 1200 | 40 | 0.3 | 0.3 | 0.3 | 0.3 | 0.6 | 1.0 | 0.6 |

Used for ammeter & Wattmeters. Approx. weight 1 lbs.

# OMEGA 30B
## 5ASHT

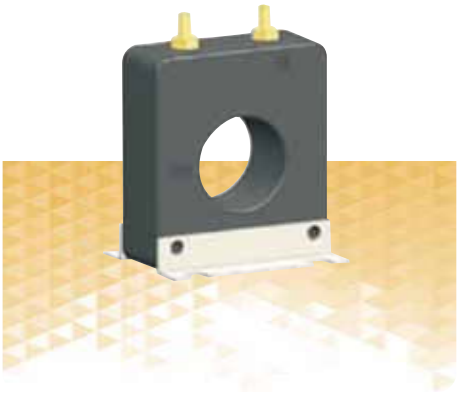

## Dimensions

**5ASFT**

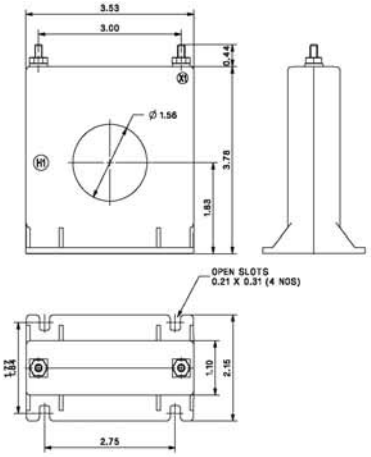


**5ASHT**

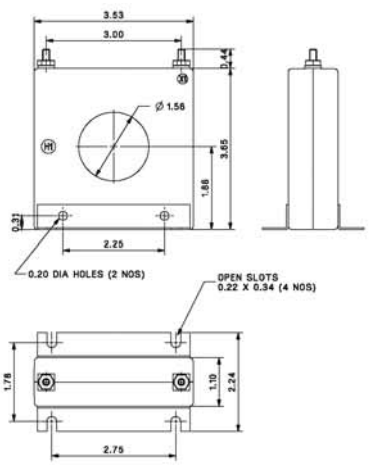


# OMEGA 30B
## 5ARL

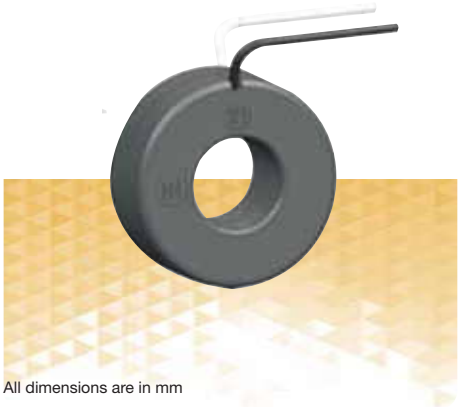

All dimensions are in mm

**5ARL**

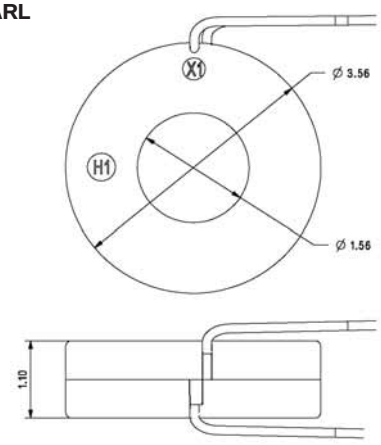


**Features given vary from product to product - for more detailed product specific info please visit our website www.sifamtinsley.co.uk**

## Omega 30B (5NDRL)

# OMEGA 30B
5NDRL

| Cat No. | Ratio | VA |
|---|---|---|
| 50 | ± 2% | 2.5 |
| 60 | ± 1% 2 | .5 |
| 75 | ± 1% | 3.5 |
| 100 | ± 1% | 5.0 |
| 150 | ± 1% | 10 |
| 200 | ± 1% | 12.5 |
| 250 | ± 1% | 20 |
| 300 | ± 1% | 25 |

| Cat No. | Ratio | VA |
|---|---|---|
| 400 | ± 1% | 40 |
| 500 | ± 1% | 50 |
| 600 | ± 1% | 60 |
| 750 | ± 1% | 60 |
| 800 | ± 1% | 60 |
| 1000 | ± 1% | 75 |
| 1200 | ± 1% | 90 |



Used for ammeter, Wattmeters & cross current compensation. Approx. weight 2 lbs.

## Dimensions
**5NDRL**

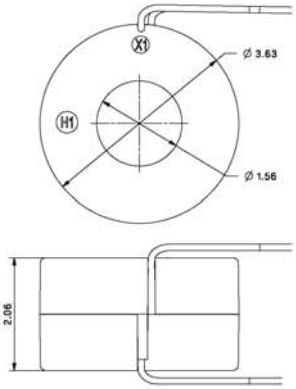


## Omega 30B (5ADRL)

# OMEGA 30B
5ADRL

| Current Ratio | VA at ±1% Class | ANSI Metering Class B0.1 | B0.2 | B0.3 | B0.9 | B1.8 | Cont. Thermal RF @30 | @55 |
|---|---|---|---|---|---|---|---|---|
| 50 | ±1% 2.5 | 2.4 | - | - | - | - | 2.0 | 2.0 |
| 60 | 2.5 | 1.2 | 4.8 | - | - | - | 2.0 | 2.0 |
| 75 | 3.5 | 1.2 | 2.4 | - | - | - | 2.0 | 2.0 |
| 80 | 4.0 | 1.2 | 2.4 | 4.8 | - | - | 2.0 | 2.0 |
| 100 | 5.0 | 0.6 | 1.2 | 4.8 | 4.8 | - | 2.0 | 2.0 |
| 120 | 7.5 | 0.6 | 0.6 | 2.4 | 4.8 | - | 2.0 | 2.0 |
| 125 | 7.5 | 0.6 | 0.6 | 2.4 | 4.8 | 4.8 | 2.0 | 2.0 |
| 150 | 10 | 0.6 | 0.6 | 1.2 | 2.4 | 4.8 | 2.0 | 2.0 |
| 200 | 12.5 | 0.6 | 0.6 | 0.6 | 1.2 | 2.4 | 2.0 | 1.5 |
| 250 | 20 | 0.3 | 0.3 | 0.6 | 1.2 | 2.4 | 2.0 | 1.5 |
| 300 | 25 | 0.3 | 0.3 | 0.6 | 1.2 | 1.2 | 1.5 | 1.33 |
| 400 | 40 | 0.3 | 0.3 | 0.3 | 0.6 | 1.2 | 1.5 | 1.0 |
| 500 | 50 | 0.3 | 0.3 | 0.3 | 0.3 | 0.6 | 1.5 | 1.0 |
| 600 | 60 | 0.3 | 0.3 | 0.3 | 0.3 | 0.6 | 1.0 | 0.8 |
| 750 | 75 | 0.3 | 0.3 | 0.3 | 0.3 | 0.6 | 1.33 | 1.0 |
| 800 | 80 | 0.3 | 0.3 | 0.3 | 0.3 | 0.3 | 1.33 | 1.0 |
| 1000 | 90 | 0.3 | 0.3 | 0.3 | 0.3 | 0.3 | 1.0 | 0.8 |



Used for ammeter & Wattmeters. Approx. weight 2 lbs.

## Dimensions
**5ADRL**

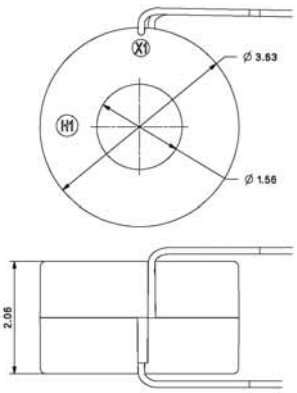

# OMEGA 30C
## 6NSFT

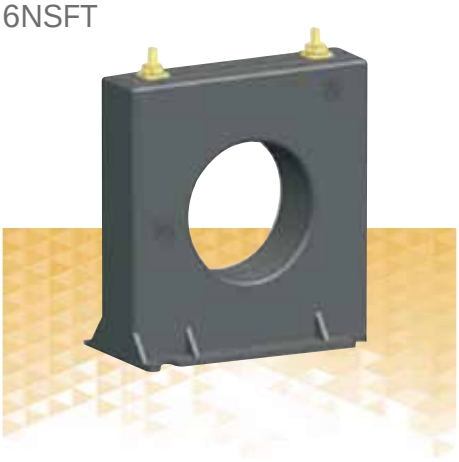

# OMEGA 30C
## 6NSHT

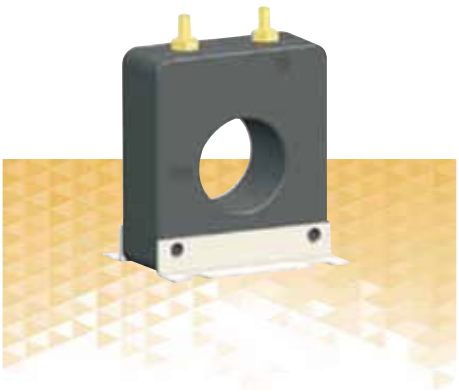

# OMEGA 30C
## 6NRL



All dimensions are in mm

**Features given vary from product to product - for more detailed product specific info please visit our website www.sifamtinsley.co.uk**

## Omega 30C (6NSFT, 6NSHT & 6NRL Series)

| Cat No. | Ratio | VA |
|---|---|---|
| 100 | ± 2% | 2.0 |
| 150 | ± 1% | 5.0 |
| 200 | ± 1% | 5.0 |
| 250 | ± 1% | 7.5 |
| 300 | ± 1% | 12.5 |
| 400 | ± 1% | 15 |
| 500 | ± 1% | 25 |

| Cat No. | Ratio | VA |
|---|---|---|
| 600 | ± 1% | 30 |
| 750 | ± 1% | 25 |
| 800 | ± 1% | 25 |
| 1000 | ± 1% | 35 |
| 1200 | ± 1% | 40 |
| 1500 | ± 1% | 50 |

Used for ammeter, Wattmeters & cross current compensation. Approx. weight 1.2 lbs.

## Dimensions

**6NSFT**

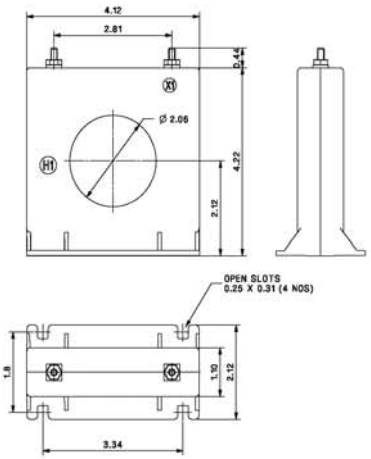


**6NSHT**

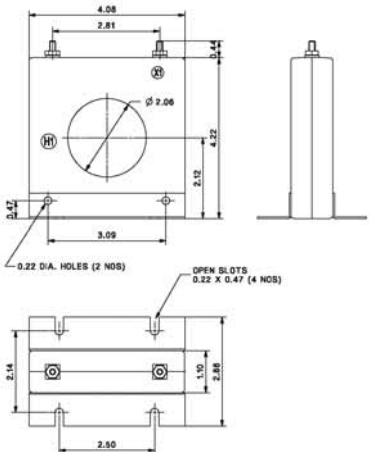


**6NRL**

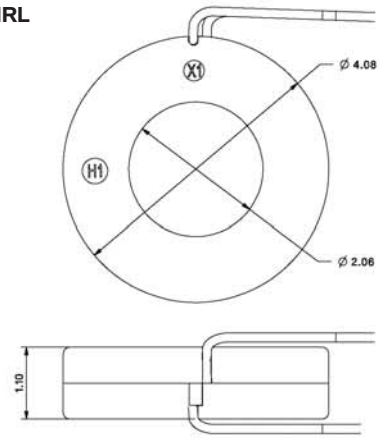

## Omega 30C (6ASFT, 6ASHT & 6ARL Series)

| Current Ratio | VA at ±1% Class | ANSI Metering Class B0.1 | B0.2 | B0.3 | B0.9 | B1.8 | Cont. Thermal RF @30 | @55 |
|---|---|---|---|---|---|---|---|---|
| 100 | 1.0 | 1.2 | 2.4 | - | - | - | 2.0 | 2.0 |
| 150 | 5.0 | 1.2 | 1.2 | 4.8 | 4.8 | - | 2.0 | 2.0 |
| 200 | 5.0 | 0.6 | 1.2 | 2.4 | 4.8 | - | 2.0 | 2.0 |
| 250 | 7.5 | 0.3 | 0.6 | 2.4 | 2.4 | 4.8 | 2.0 | 1.5 |
| 300 | 12.5 | 0.3 | 0.6 | 1.2 | 2.4 | 2.4 | 2.0 | 1.5 |
| 400 | 15 | 0.3 | 0.3 | 0.6 | 1.2 | 2.4 | 1.5 | 1.33 |
| 500 | 25 | 0.3 | 0.3 | 0.6 | 1.2 | 2.4 | 1.5 | 1.0 |
| 600 | 30 | 0.3 | 0.3 | 0.6 | 0.6 | 1.2 | 1.33 | 1.0 |
| 750 | 30 | 0.3 | 0.3 | 0.6 | 0.6 | 1.2 | 1.25 | 1.0 |
| 800 | 35 | 0.3 | 0.3 | 0.6 | 0.6 | 0.6 | 1.25 | 0.8 |
| 1000 | 35 | 0.3 | 0.3 | 0.3 | 0.6 | 0.6 | 1.0 | 0.8 |
| 1200 | 40 | 0.3 | 0.3 | 0.3 | 0.3 | 0.6 | 1.0 | 0.8 |
| 1500 | 50 | 0.3 | 0.3 | 0.3 | 0.3 | 0.6 | 1.0 | 0.8 |

Used for ammeter and Wattmeters. Approx. weight 1.25 lbs.

OMEGA 30C
6ASFT

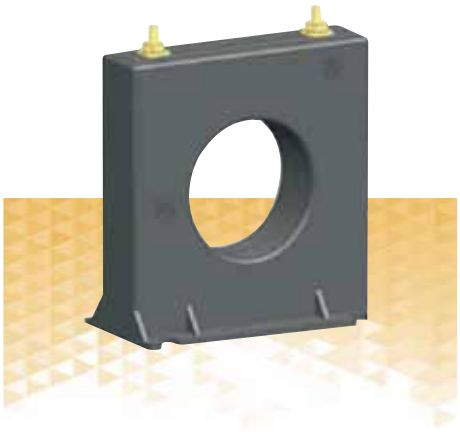

## Dimensions

**6ASFT**

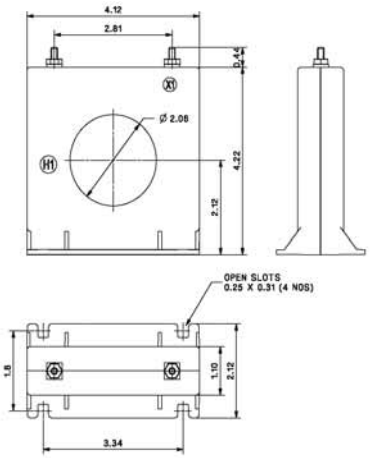


**6ASHT**

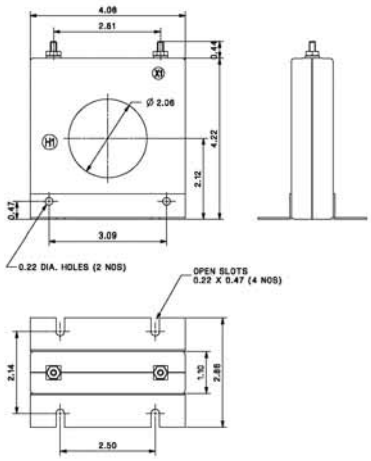


OMEGA 30C
6ASHT

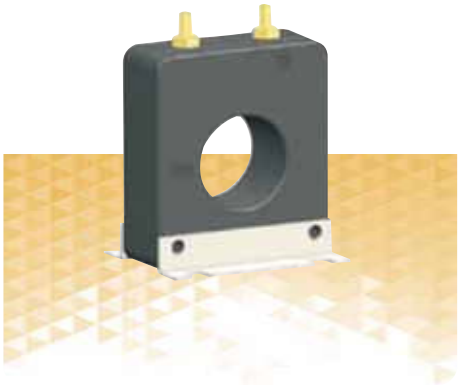

**6ARL**

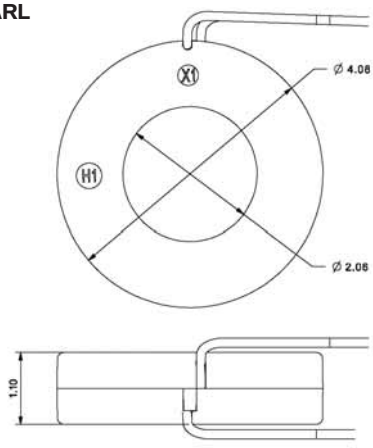


OMEGA 30C
6ARL



# OMEGA 30D
## 7NSFT

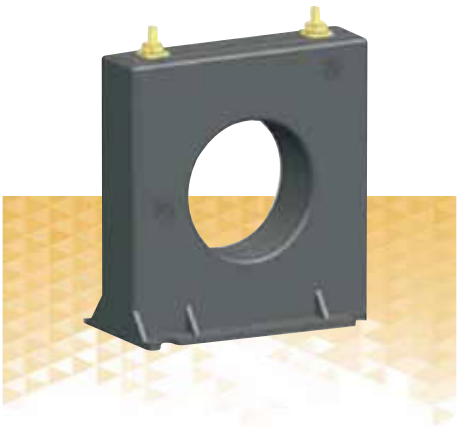

# OMEGA 30D
## 7NSHT

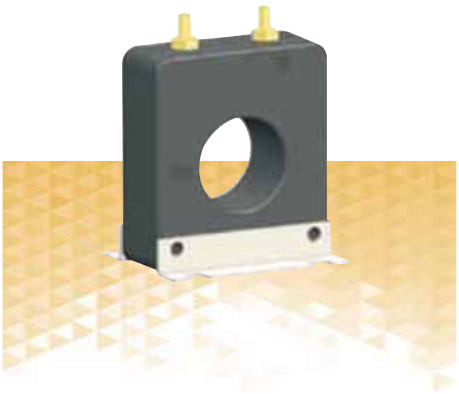

# OMEGA 30D
## 7NRL



All dimensions are in mm

**Features given vary from product to product - for more detailed product specific info please visit our website www.sifamtinsley.co.uk**

## Omega 30D (7NSFT, 7NSHT & 7NRL Series)

| Cat No. | Ratio | VA |
|---|---|---|
| 100 | ± 2% | 2.5 |
| 150 | ± 1% | 5.0 |
| 200 | ± 1% | 5.0 |
| 250 | ± 1% | 5.0 |
| 300 | ± 1% | 12.5 |
| 400 | ± 1% | 15 |
| 500 | ± 1% | 25 |

| Cat No. | Ratio | VA |
|---|---|---|
| 600 | ± 1% | 30 |
| 750 | ± 1% | 30 |
| 800 | ± 1% | 35 |
| 1000 | ± 1% | 35 |
| 1200 | ± 1% | 35 |
| 1500 | ± 1% | 40 |
| 1600 | ± 1% | 45 |

Used for ammeter, Wattmeters & cross current compensation. Approx. weight 1.5 lbs.

## Dimensions

**7NSFT**

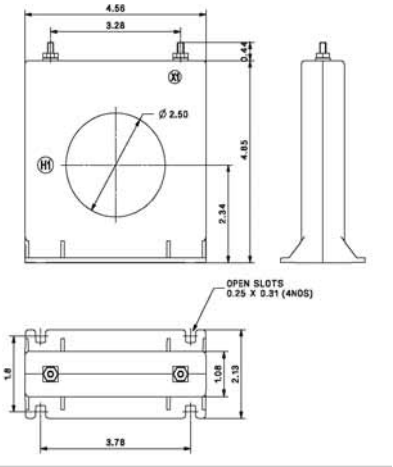


**7NSHT**

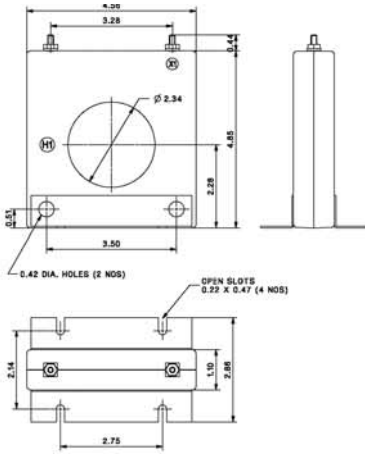


**7NRL**

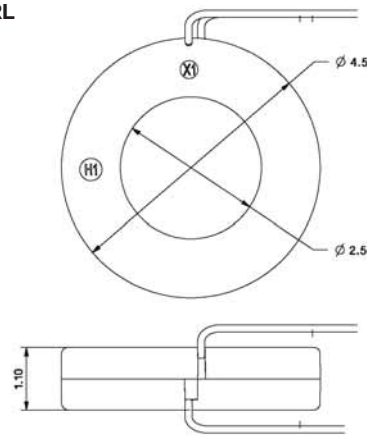

## Omega 30D (7ASFT, 7ASHT & 7ARL Series)

| Current Ratio | VA at ±1% Class | ANSI Metering Class B0.1 | B0.2 | B0.3 | B0.9 | B1.8 | Cont. Thermal RF @30 | @55 |
|---|---|---|---|---|---|---|---|---|
| 100 | 1.0 | 2.4 | 4.8 | - | - | - | 2.0 | 2.0 |
| 150 | 2.5 | 1.2 | 2.4 | 4.8 | 4.8 | - | 2.0 | 2.0 |
| 200 | 5.0 | 0.6 | 1.2 | 2.4 | 4.8 | 4.8 | 2.0 | 2.0 |
| 250 | 7.5 | 0.3 | 0.6 | 1.2 | 2.4 | 4.8 | 2.0 | 2.0 |
| 300 | 12.5 | 0.3 | 0.6 | 1.2 | 2.4 | 2.4 | 2.0 | 1.5 |
| 400 | 15 | 0.3 | 0.3 | 0.6 | 1.2 | 2.4 | 2.0 | 1.5 |
| 500 | 25 | 0.3 | 0.3 | 0.6 | 1.2 | 1.2 | 1.5 | 1.0 |
| 600 | 30 | 0.3 | 0.3 | 0.6 | 0.6 | 1.2 | 1.5 | 1.0 |
| 750 | 30 | 0.3 | 0.3 | 0.3 | 0.6 | 0.6 | 1.33 | 1.0 |
| 800 | 35 | 0.3 | 0.3 | 0.3 | 0.6 | 0.6 | 1.33 | 1.0 |
| 1000 | 35 | 0.3 | 0.3 | 0.3 | 0.6 | 0.6 | 1.33 | 1.0 |
| 1200 | 40 | 0.3 | 0.3 | 0.3 | 0.3 | 0.6 | 1.0 | 1.0 |
| 1500 | 50 | 0.3 | 0.3 | 0.3 | 0.3 | 0.6 | 1.0 | 0.8 |
| 1600 | 50 | 0.3 | 0.3 | 0.3 | 0.3 | 0.6 | 1.0 | 0.8 |

Used for ammeter and Wattmeters. Approx. weight 1.25 lbs.

OMEGA 30D
7ASFT

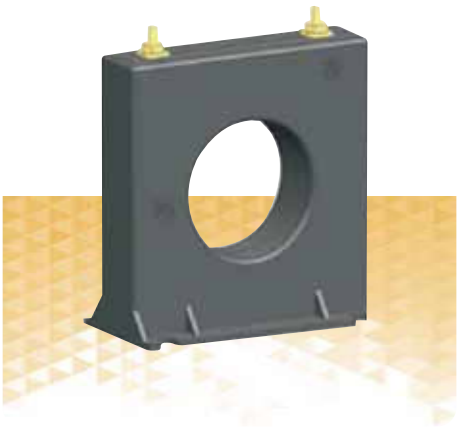

## Dimensions

**7ASFT**

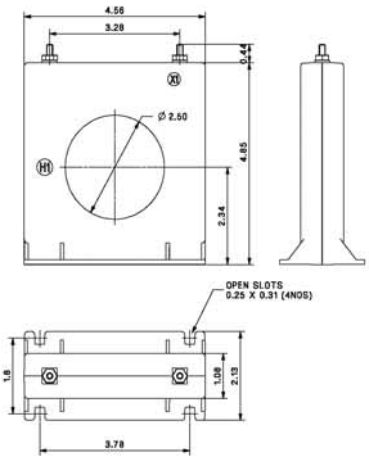


**7ASHT**

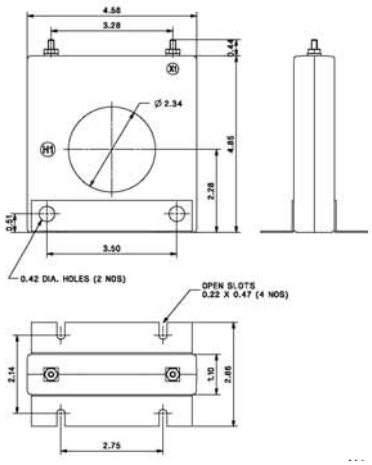


OMEGA 30D
7ASHT

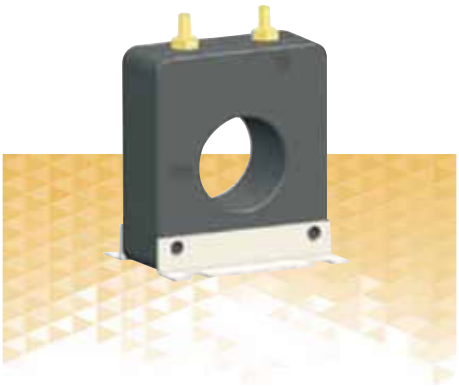

**7ARL**

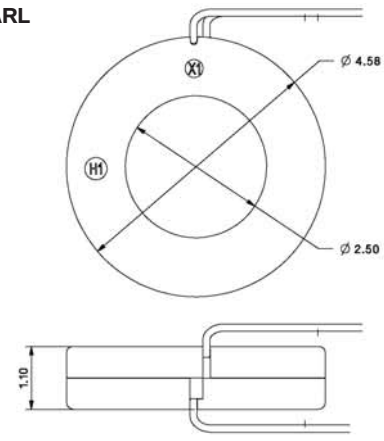


OMEGA 30D
7ARL



# OMEGA 30E
## 8ASFT

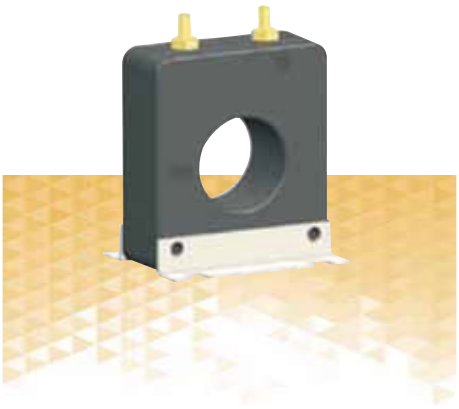

## Omega 30E (8ASFT, 8ARL Series)

| Current Ratio | VA at ±1% Class | ANSI Metering Class B0.1 | B0.2 | B0.3 | B0.9 | B1.8 | Cont. Thermal RF @30 | @55 |
|---|---|---|---|---|---|---|---|---|
| 200 | 5.0 | 1.2 | 1.2 | 2.4 | 4.8 | 4.8 | 2.0 | 2.0 |
| 250 | 7.5 | 0.6 | 0.6 | 1.2 | 2.4 | 4.8 | 2.0 | 2.0 |
| 300 | 15 | 0.6 | 0.6 | 1.2 | 2.4 | 2.4 | 2.0 | 2.0 |
| 400 | 25 | 0.3 | 0.3 | 0.6 | 1.2 | 2.4 | 2.0 | 1.5 |
| 500 | 35 | 0.3 | 0.3 | 0.6 | 0.6 | 1.2 | 2.0 | 1.5 |
| 600 | 50 | 0.3 | 0.3 | 0.6 | 0.6 | 1.2 | 1.5 | 1.33 |
| 750 | 50 | 0.3 | 0.3 | 0.6 | 0.6 | 1.2 | 1.5 | 1.0 |
| 800 | 60 | 0.3 | 0.3 | 0.3 | 0.6 | 0.6 | 1.5 | 1.0 |
| 1000 | 75 | 0.3 | 0.3 | 0.3 | 0.6 | 0.6 | 1.33 | 1.0 |
| 1200 | 75 | 0.3 | 0.3 | 0.3 | 0.3 | 0.6 | 1.5 | 1.0 |
| 1500 | 90 | 0.3 | 0.3 | 0.3 | 0.3 | 0.6 | 1.33 | 1.0 |
| 1600 | 100 | 0.3 | 0.3 | 0.3 | 0.3 | 0.6 | 1.33 | 0.8 |
| 2000 | 120 | 0.3 | 0.3 | 0.3 | 0.3 | - | 1.0 | 0.8 |
| 2500 | 50 | 0.3 | 0.3 | 0.3 | 0.3 | - | 1.0 | 0.8 |
| 3000 | 60 | 0.3 | 0.3 | 0.3 | 0.3 | - | 1.0 | 0.8 |
| 3200 | 70 | 0.3 | 0.3 | 0.3 | 0.3 | - | 1.0 | 0.8 |
| 4000 | 80 | 0.3 | 0.3 | 0.3 | 0.3 | - | 0.8 | 0.8 |

Used for Metering. Approx. weight 2.5 lbs.

# OMEGA 30E
## 8ARL



## Dimensions

**8ASFT**

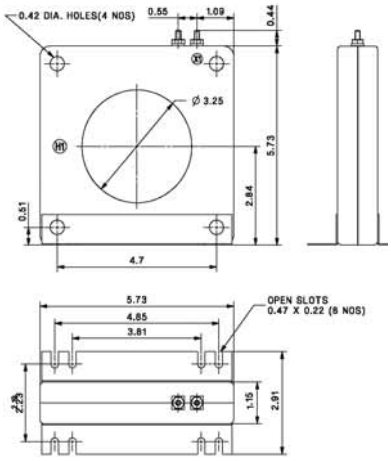


**8ARL**

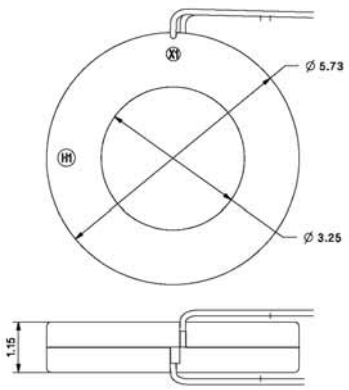


All dimensions are in mm

**Features given vary from product to product - for more detailed product specific info please visit our website www.sifamtinsley.co.uk**

# LTRC Series – Resin Cast

LTRC Series – Resin Cast CT's are Epoxy Resin type with Insulation Class E (120°C). These LV metering CT's feature sealable terminal covers and primary current ratings from 100A to 1200A. Available in various, Bus bar sizes, case widths, and with foot mounting facility.

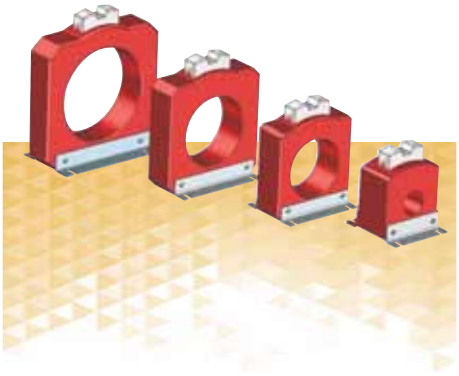

## Specifications

- Applicable standard: IEC61869-1 & 2
- Case: Epoxy Resin
- Insulation class: E(120°C max)
- Test voltage: 3KV 50 Hz for 1 minute
- Operating frequency: 50Hz
- Rated Primary current: 100A to 1200A
- Rated secondary current: 5A standard
- Continuous current: 1.2X Rated current
- Rated system voltage: 0.72/3KV
- Ambient temperature range: 25 to +40°C
- Storage temperature range: 50 to +80°C

### Features

- Compact size
- Wide range of system current Ratings
- Transparent terminal cover
- Wall mounting
- Terminal with self lifting screw

LTRC Series

## LTRC-1 Series

### LTRC-1 80/30(50)

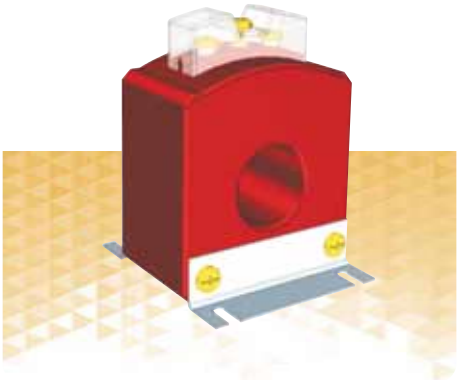

| Ratio | VA | Class |
|---|---|---|
| 100 | 5 | 1 |
| 125 | 5 | 1 |
| 150 | 5 | 1 |

## Dimensions

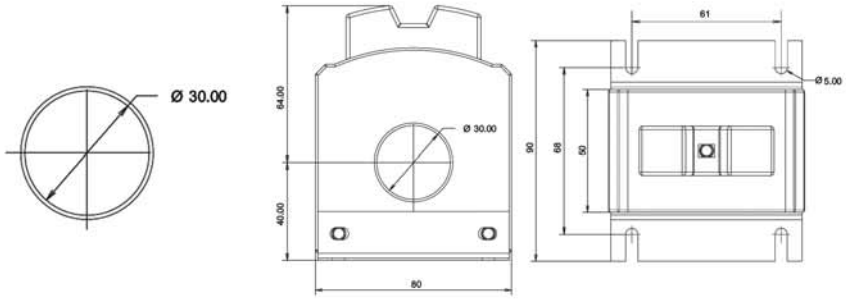

# LTRC-2 Series

## LTRC-2 90/50(40)



| Ratio | VA | Class |
|---|---|---|
| 200 | 10 | 1 |
| 250 | 10 | 1 |
| 300 | 10 | 1 |

### Dimensions

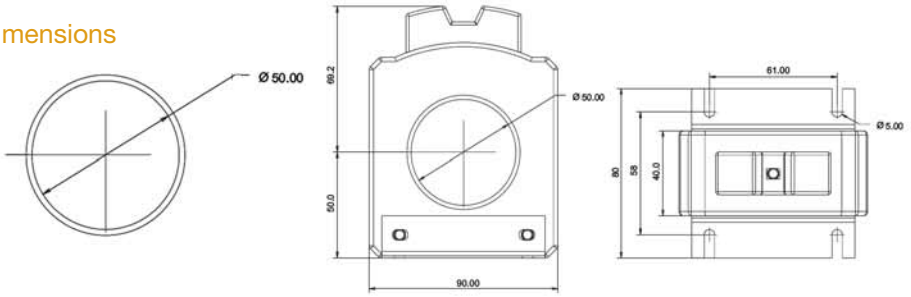


# LTRC-3 Series

## LTRC-3 110/72(40)

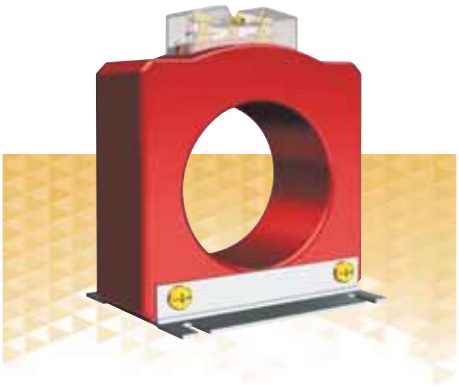

| Ratio | VA | Class |
|---|---|---|
| 400 | 15 | 1 |
| 500 | 15 | 1 |
| 600 | 15 | 1 |
| 630 | 15 | 1 |

### Dimensions

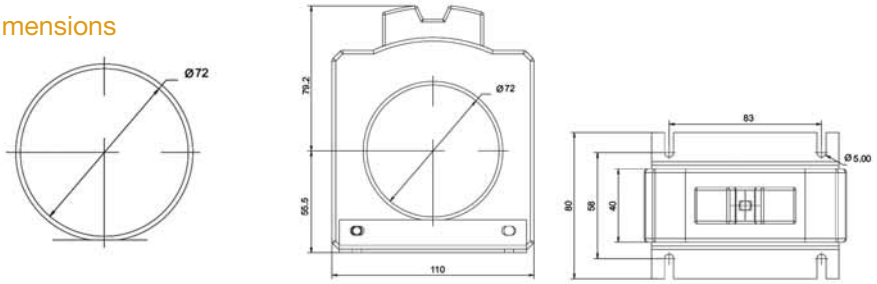


# LTRC-4 Series

## LTRC-4 135/85(40)

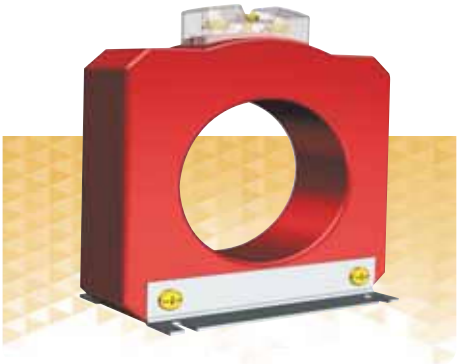

| Ratio | VA | Class |
|---|---|---|
| 800 | 15 | 1 |
| 1000 | 15 | 1 |
| 1200 | 15 | 1 |

### Dimensions

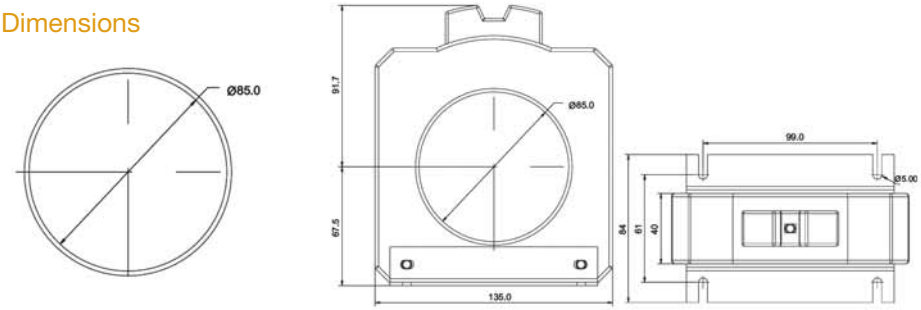


**Features given vary from product to product - for more detailed product specific info please visit our website www.sifamtinsley.co.uk**

All dimensions are in mm

# About Sifam Tinsley

An established brand name for over 75 years; Sifam Tinsley Instrumentation has an unrivaled pedigree in the industry, our dedicated research and development facility ensures that the latest technology is utilised in our electronic products whilst our traditional analogue range continues to perform through the test of time. Our UK facility completes the picture by enabling the service our customers expect.



## Our Vision

To remain in harmony with our customers and continue to meet their ever changing and more demanding requirements.

## Our Mission

Sifam Tinsley Instrumentation is proud to offer an unrivalled, dedicated, custom service to our customers by supplying the exact product requirement, on time, every time, from our local UK facility.

sifam tinsley
PRECISION INSTRUMENTATION

# Notes

# Notes

sifam tinsley
PRECISION INSTRUMENTATION

# Powered by technology
# ...driven by service

Multifunction Meters

Transducers & Isolators

Temperature Controllers

Converters & Recorders

Digital Panel Meters

Current Transformers

Analogue Panel Meters

Shunts

Digital Multimeters

Clamp Meters

Insulation Testers

Approvals

**Sifam Tinsley Instrumentation Ltd**

1 Warner Drive
Springwood Industrial Estate
Braintree, Essex
CM7 2YW

Tel: 01376 335271
E-mail: sales@sifamtinsley.co.uk

**www.sifamtinsley.co.uk**