

Joystick 2-positions,stay,horiz,titan

Part no.	**M22-WRJ2H**
Article no.	**289199**
Catalog No.	**M22-WRJ2HQ**

Powering Business Worldwide

Delivery programme

Product range			RMQ-Titan (drilling dimensions 22.5 mm)
Basic function			Joystick
Single unit/Complete unit			Single unit
Description			2 positions with one operating point per operating direction
Function			maintained Horizontal
Function			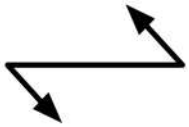
Front ring			Front ring: titanium
Connection to SmartWire-DT			yes

Notes

Bezel gold-plated →#274150

Use adapter M22-A4→#279437

Approvals

Product Standards	IEC/EN 60947-5; UL 508; CSA-C22.2 No. 14-05; CSA-C22.2 No. 94-91; CE marking
UL File No.	E29184
UL Category Control No.	NKCR
CSA File No.	012528
CSA Class No.	3211-03
North America Certification	UL listed, CSA certified
Degree of Protection	UL/CSA Type 3R, 4X, 12, 13

General

Standards			IEC/EN 60947 VDE 0660
Lifespan, mechanical	Operations	x 10^6	> 0.1
Operating frequency	Operations/ h		2000
Actuating force		n	5
Protection type			IP66
Climatic proofing			Damp heat, constant, to IEC 60068-2-78 Damp heat, cyclic, to IEC 60068-2-30
Ambient temperature		°C	
Open		°C	- 25 - + 70
Mounting position			As required
Mechanical shock resistance		g	30 Shock duration 11 ms Sinusoidal according to IEC 60068-2-27

Technical data ETIM 5.0

Low-voltage industrial components (EG000017) / Control switch, Joystick (EC000632)
Electric engineering, automation, process control engineering / Low-voltage switch technology / Off-load switch, circuit breaker, control switch / Control switch, joystick (ecl@ss8-27-37-14-04 [AKF061009])

Rated operation current Ie at AC-21		A	0
Centre mounting, hole diameter		mm	0
Joy stick length		mm	0
Number of actuation directions			0
Number of switch levels			0
Number of normally open contacts per actuation direction			0

Number of normally closed contacts per actuation direction			0
Number of make-and-break contacts per direction			0
With retraction in 0-position			No
Locking in 0-position			No
Coder			No
Analogue output signal configurable			No
Degree of protection (IP)			IP66
With front ring			Yes
Material front ring			Plastic
Colour front ring			Chrome

Dimensions

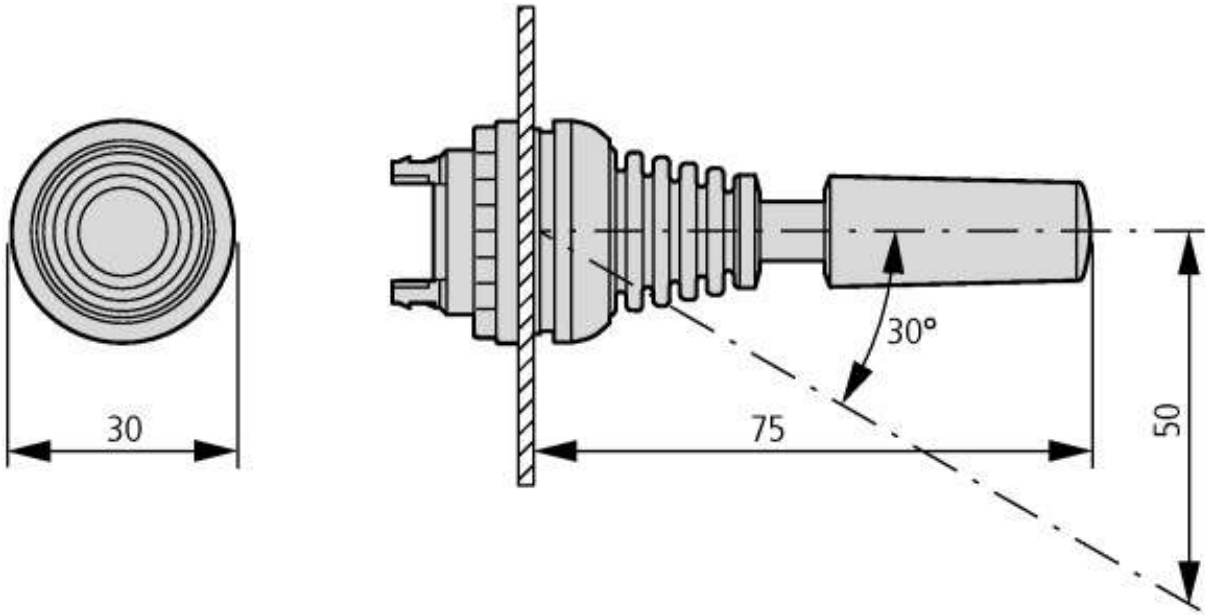

Additional product information (links)

IL04716002Z (AWA1160-1745) RMQ-Titan System	
IL04716002Z (AWA1160-1745) RMQ-Titan System	ftp://ftp.moeller.net/DOCUMENTATION/AWA_INSTRUCTIONS/IL04716002Z2013_08.pdf

© 11/2013 by Eaton Industries GmbH