Brand of NTN corporation

Technical data

EXPE211

Bearing units



Grey cast housing, radial insert ball bearing with eccentric locking collar, seal with slinger

KIT CONTENT

EX211G2, PE211

VISUAL (S)

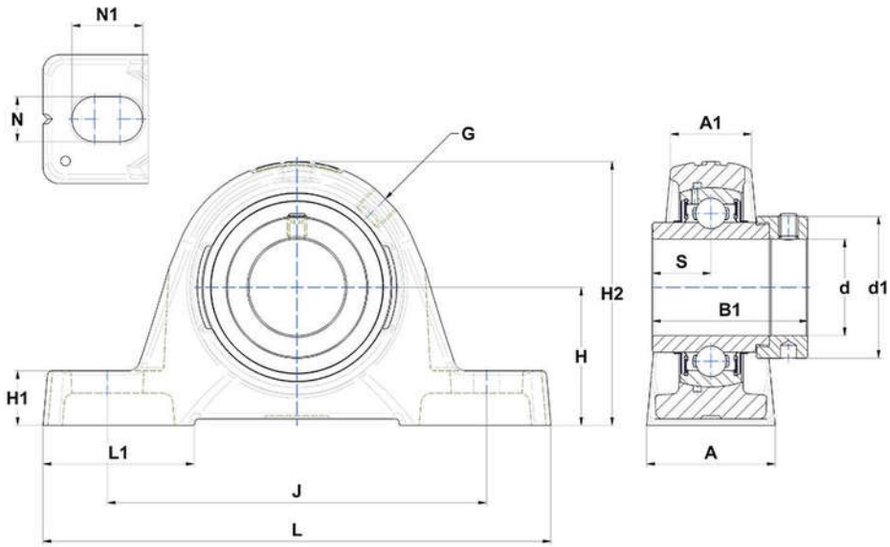

PRODUCT DEFINITION

Brand	SNR
A - Housing width	60 mm
A1 - Housing top width	35 mm
B - Width of Inner Ring	55,4 mm
d - Shaft diameter	55 mm
d1 - Outer dia of eccent. Lock. collar / nut of adapter sleeve	74,5 mm

EXPE211
Bearing units

PRODUCT DEFINITION	
G - Grease fitting	R1/8"
H - Distance mounting base to centerline spheric. seating diam.	63,5 mm
H1 - Housing foot height	22,5 mm
H2 - Housing height	124,5 mm
J - Mounting holes distance	176 mm
L - Housing length	222 mm
L1 - Housing foot length	68 mm
N - Mounting hole dimension	18 mm
N1 - Mounting hole length	30 mm
S - Distance front side/bearing centre	27,7 mm

PRODUCT PERFORMANCE	
C - Dynamic load rating	43550000 mN
C0 - Static load rating	29200000 mN
Operating temperature min.	253,15 °K
Operating temperature max.	373,15 °K

OTHER FEATURES	
Mass	3,69 kg
Recommended tightening torque for set screw	22 N-m