Tapered roller bearings, single row

Principal dimensions			Basic load ratings		Speed ratings		Designation
			dynamic	static	Reference speed	Limiting speed	
d	D	T	C	C0			* SKF Explorer bearing
mm			kN		r/min		-
38	63	17	36,9	52	7500	11000	JL 69349/310/Q

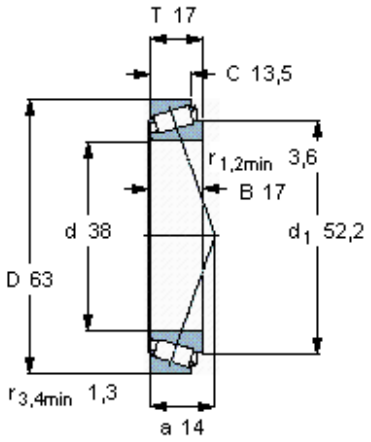

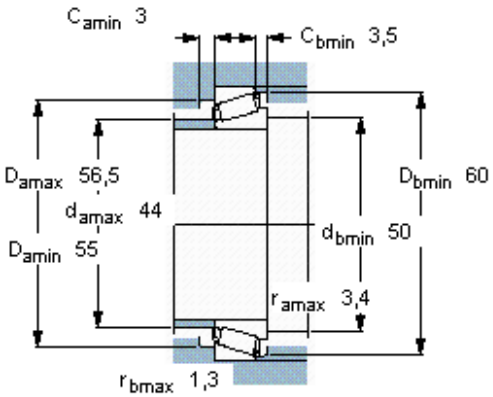

Calculation factors

e 0,43

Y 1,4

Y_0 0,8