60807-181 PCB BRACKET FOR FIXING FRONT PANEL/PCB, DIE-CAST ZINC



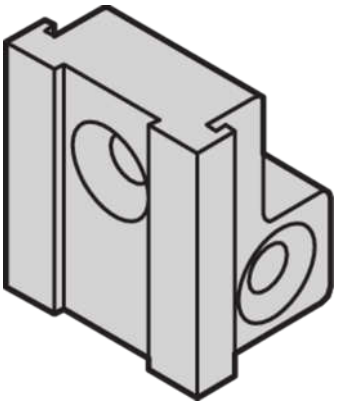

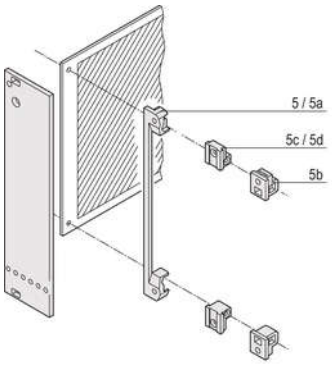

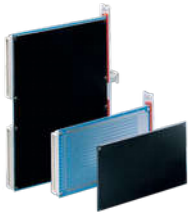

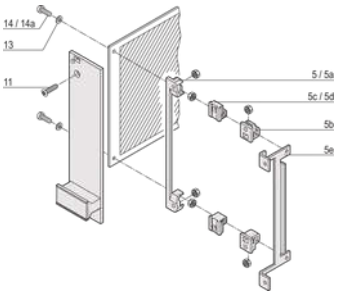

KEY FEATURES

For fixing PCB to front panel

PRODUCT ATTRIBUTES

Product Type: Bracket
Type: PCB Bracket
Works With: Front Panels
Material: Die-Cast Zinc
Height: 11.1 mm
Width: 10.2 mm
Depth: 8.6 mm
Package Quantity: 1

Thread Size: M2.5

Thread Type: Metric

ADDITIONAL PRODUCT DETAILS

The PCB support brackets enable the fixing of a PCB to front panel. Available in different materials.

Delivery is in standard pack multiples. Pricing is per individual item.

CERTIFICATIONS



North America
All locations
+1.763.422.2661
Chat with us:
schroff.nvent.com

Europe
Straubenhardt, Germany
+49.7082.794.0
Betschdorf, France
+33.3.88.90.64.90
Warsaw, Poland
+48.22.209.98.35
Assago, Italy
+39.02.932.7141
Chat with us:
schroff.nvent.com

Asia
Shanghai, China
+86.21.2412.6943
Qingdao, China
+86.532.8771.6101
Singapore
+65.6768.5800
Shin-Yokohama, Japan
+81.45.476.0271
Chat with us:
schroff.nvent.com

Middle East & India
Dubai, United Arab Emirates
+971.4.378.1700
Bangalore, India
+91.80.6715.2001
Istanbul, Turkey
+90.216.250.7374
Chat with us:
schroff.nvent.com

nVent

Our powerful portfolio of brands:
nVent.com CADDY ERICO HOFFMAN RAYCHEM SCHROFF TRACER

© 2023 nVent. All nVent marks and logos are owned or licensed by nVent Services GmbH or its affiliates. All other trademarks are the property of their respective owners.

nVent reserves the right to change specifications without notice.