Temperature controllers

LED temperature controllers | For temperature sensors with limit value (AC+DC) | Codix 564



The temperature controller Codix 564 displays temperature values in high resolution. In addition it can monitor and control 2 limit values. All current temperature sensors, such as thermocouple types B, E, J, K, N, R, S and T, as well as mV inputs, Pt100 and resistance inputs, can be connected to the device.

These fast displays set new standards when it comes to user friendliness. Their easy-to-read 14-segment LED display, easy-to-understand running help texts and a practical quick-start guide eliminate the need to wade through time-consuming full instruction manuals.

With optional analog output.

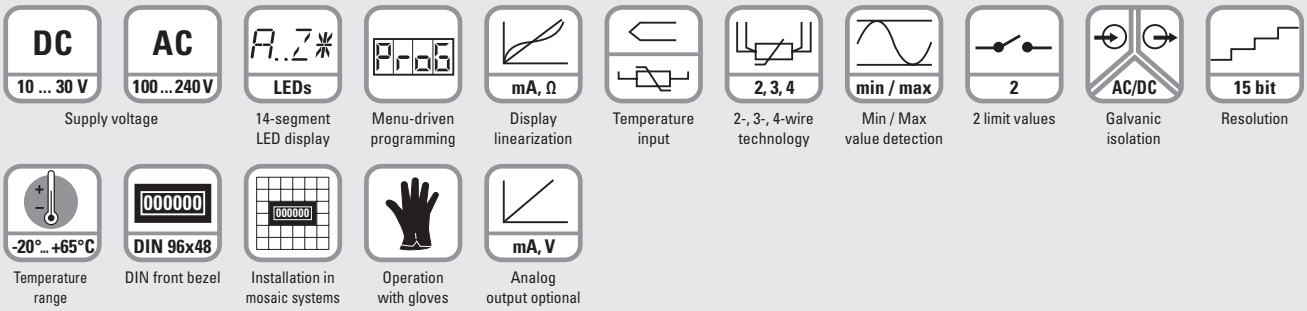

User-friendly

- Practical quick-start guide for setting the parameters and operating the device.
- Help text as running text.
- Easy-to-read 14-segment LED, 6-digit display, 14 mm high.
- Simple programming via 4 keys on the front.
- One front key as well as 2 additional inputs can be programmed for specific applications.
- Characteristic curves for thermocouples and RTD permanently stored.
- MIN/MAX memory function, individually resettable.

Powerful

- Sampling rate of 10 readings per second.
- Customized linearization via 12 control points.
- 2 relay outputs (changeover contacts) for limit monitoring with hysteresis and ON/OFF delay function.
- Analog output for the current measured value, MIN-value, MAX-value.
- Auxiliary sensor supply voltage with AC version.
- Inputs and outputs galvanically isolated.
- Digital filter (first-order) for smoothing display fluctuations with unstable input signals.

Order code

6.564 (a) . 010 (b) . X (c) 0 X (d)

a *Input type*
4 = Temperature signal input [1)]

b *Outputs*
0 = relays [1)]

c *Supply voltage*
0 = 100 ... 240 V AC, ±10 % [1)]
3 = 10 ... 30 V DC [1)]

d *Further outputs (optional)*
0 = none [1)]
9 = analog output [1)]
(only for DC version)

Delivery specification:
- Process device
- Mounting clip
- Gasket
- Instruction manual, multilingual
- 1 sheet of self-adhesive symbols
- Quick-start guide

Practical quick-start guide for setting the parameters and operating the device.

The guide can be affixed directly to the front of the unit and can be removed and re-applied as required.



1) Stock types.

© Fritz Kübler GmbH, subject to errors and changes. 03/2023

LED temperature controllers | For temperature sensors with limit value (AC+DC) | Codix 564

Accessories / Mounting examples

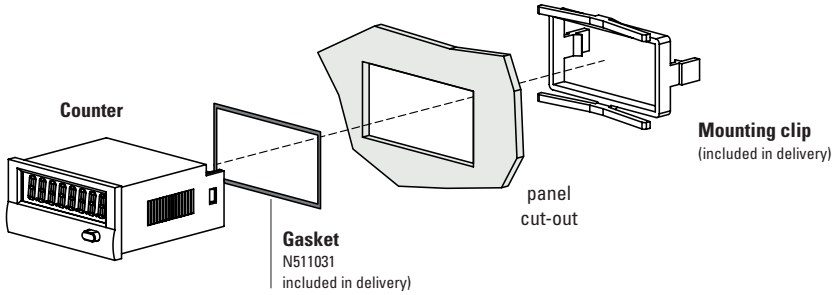

		Type / size	Description		Order no.	
Gasket counter			96 x 49 mm [3.78 x 1.93“]		N511031	
Mounting frame		**cut-out 92 x 45 mm [3.62 x 1.77“]**	for snap-on mounting on 35 mm [1.38“] top-hat DIN rail	grey	G300005	–
Screw terminal (Replacement part)			1 ... 7, pitch 3.81 1 ... 2, pitch 5.08	7 pin 2 pin	N100387 N100133	
					incl. in delivery	

© Fritz Kübler GmbH, subject to errors and changes. 03/2023

LED temperature controllers | For temperature sensors with limit value (AC+DC) | Codix 564

Technical data

General technical data

Display	6-digit, 14 segment LED
Digit height	14 mm [0.55“]
Display range	-199999 … 999999, with leading zero blanking
Data retention	> 10 years, EEPROM
Operation	5 keys
Operating temperature	-20 °C ... +65 °C [-4 °F ... +149 °F] (non-condensing)
Storage temperature	-25 °C ... +75 °C [-13 °F ... +167 °F]
Relative humidity	93 % (non-condensing)
Altitude	up to 2000 m [6562‘]

Electrical characteristics

Supply voltage	AC supply	100 ... 240 V AC / max. 9 VA, 50 / 60 Hz, tolerance ±10 % ext. fuse protection: T 0.1 A
	DC supply	10 ... 30 V DC / max. 3.8 W with galvanic isolation and reverse polarity protection ext. fuse protection: T 0.4 A
Mains hum suppression (programmable)		50 Hz or 60 Hz
Sensor supply voltage	AC supply	24 V DC ±15 %, 30 mA
Device safety	designed to	EN 61010 part 1
	protection class	2 (front side)
	application area	pollution level 2
	overvoltage category	II

Mechanical characteristics

Housing	Panel mount housing to DIN 43700 RAL 7021
Dimensions	96 x 48 x 102 mm [3.78 x 1.89 x 4.02“]
Panel cut-out	92 +0.8 x 45 +0.6 mm [3.62 +0.032 x 1.77 +0.024“]
Installation depth	approx. 92 mm [3.62“] incl. terminals
Weight	approx. 180 g [6.34 oz]
with analog output	200 g [7.06 oz]
Protection	IP65 (front side)
Housing material	Polycarbonate UL94 V-2
Vibration resistance acc. to EN 60068-2-6	10 - 55 Hz / 1 mm / XYZ 30 min in each direction
Shock resistance acc. to EN 60068-2-27	100 G / 2 ms / XYZ 3 times in each direction
acc. to EN 60068-2-29	10 G / 6 ms / XYZ 2000 times in each direction

Connections

Supply voltage and outputs	Plug-in screw terminal, 8-pin, RM 5.00, core ø max. 2.5 mm² [AWG 13]
Signal and control inputs	Plug-in screw terminal, 9-pin, RM 3.50, core ø max. 1.5 mm² [AWG 15]

Measuring signal inputs

Sampling rate	10 readings/sec
Temperature drift	< 100 ppm/$K_{Ambient}$

Input Thermocouple

thermocouple:	range:	accuracy at 23 °C [73.4 °F]:
type B	+250 °C ... 1820 °C [+482 °F ... 3308 °F]	typ. 1.0 °C, max. 2.0 °C
E	-200 °C ... +1000 °C [-328 °F ... +1832 °F]	typ. 0.2 °C, max. 0.5 °C
J	-210 °C ... +1200 °C [-346 °F ... +2192 °F]	typ. 0.2 °C, max. 0.5 °C
K	-200 °C ... 499.9 °C [-328 °F ... +931,82 °F]	typ. 0.6 °C, max. 1.0 °C
	-500 °C ... +1372 °C [-868 °F ... 2502 °F]	typ. 0.3 °C, max. 0.5 °C
N	-200 °C ... +1300 °C [-328 °F ... 2372 °F]	typ. 0.3 °C, max. 0.7 °C
R	-50 °C ... +1768 °C [-58 °F ... +3214 °F]	typ. 1.0 °C, max. 2.0 °C
S	-50 °C ... +1768 °C [-58 °F ... +3214 °F]	typ. 1.0 °C, max. 2.0 °C
T	-200 °C ... +400 °C [-328 °F ... +752 °F]	typ. 0.2 °C, max. 0.5 °C

Resolution J, K, T, E, N	1 or 0.1 °C/°F
Resolution S, R, B	1 °C/°F
Reference point	internal or external constant
Reference point accuracy	≤ ±1 °C

Input mV

Measuring range	±105 mV (resolution ±15 bit)
Measuring accuracy at 23 °C [73.4 °F] (% of range)	typ. 0.02 / max. ≤ 0.05
Input resistance	> 2 MΩ

Input Pt100

Measuring range	-200 °C … +850 °C [-328 °F ... +1562 °F]
Resolution	1 or 0.1 °C / °F
Measuring accuracy at 23 °C [73.4 °F]	typ. 0.3 °C, max. ≤ 0.6 °C
Measuring current	200 µA
Connection	2-, 3-, 4-wire
Lead wire resistance	max. 25 Ω per wire

Input 500 Ω

Measuring range	0 ... 525 Ω (resolution ±15 bit)
Measuring accuracy at 23 °C [73.4 °F]	typ. 0.1 Ω, max. ≤ 0.2 Ω
Measuring current	200 µA
Connection	2-, 3-, 4-wire
Lead wire resistance	max. 25 Ω per wire

Approvals

UL compliant in accordance with	File no. E128604
CE compliant in accordance with	
EMC Directive	2014/30/EU
RoHS Directive	2011/65/EU
Low Voltage Directive	2014/35/EU
UKCA compliant in accordance with	
EMC Regulations	S.I. 2016/1091
RoHS Regulations	S.I. 2012/3032
Low Voltage Regulations	S.I. 2016/1101

© Fritz Kübler GmbH, subject to errors and changes. 03/2023

LED temperature controllers | For temperature sensors with limit value (AC+DC) | Codix 564

Alarm outputs		
Relays		changeover contacts
Switching voltage	max. min.	250 V AC / 125 V DC 5 V AC / 5 V DC
Switching current	max. min.	5 A AC / 5 A DC 10 mA DC
Switching capacity	max.	1250 VA / 150 W
Pull-in time		approx. 10 ms

Analog output (optional - only for DC version)		
Output ranges		0 (4) ... 20 mA / 0 (2) ... 10 V
Load	current output voltage output	≤ 500 Ω ≥ 2000 Ω
Resolution		15 bit
Update time (basic device measuring rate)		100 ms
Temperature drift		≤ 100 ppm/$K_{Ambient}$
Accuracy		±0.1 % of the output range high value
Output ripple		≤ 10 mV
Isolation voltage		500 V AC for 1 minute or 1 kV DC for 1 second

Control inputs MPI 1 / MPI 2		
Quantity		2 optocouplers
Function		programmable
Switching levels	LOW HIGH	< 2 V > 4 V (max. 30 V)
Pulse length		> 100 ms

Terminal assignment

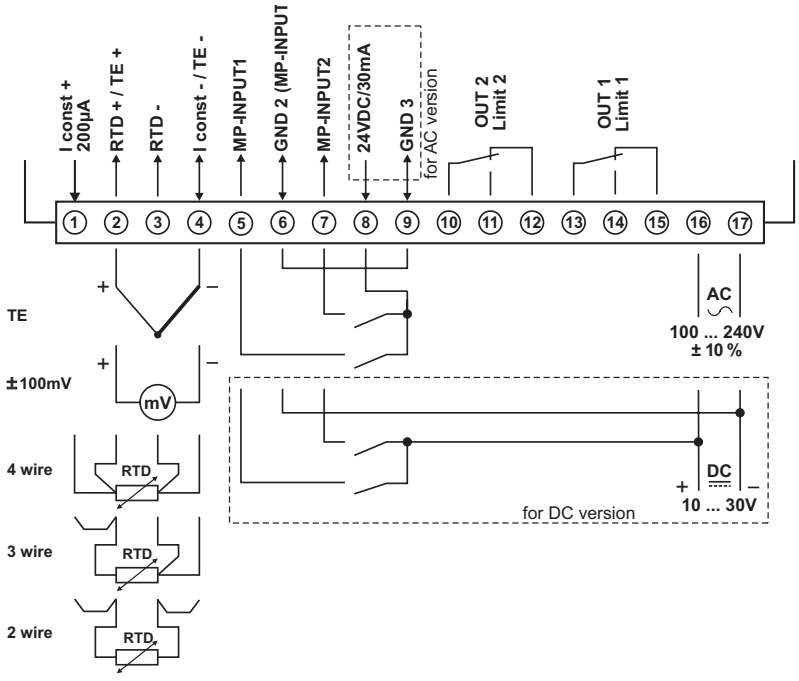

Rear side view

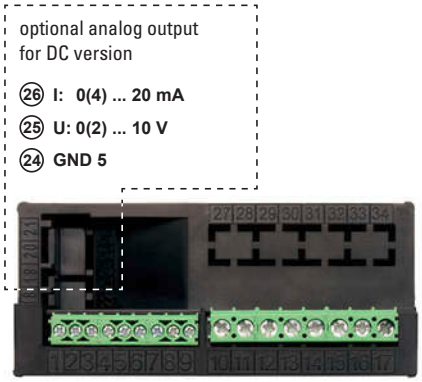

© Fritz Kübler GmbH, subject to errors and changes. 03/2023

LED temperature controllers | **For temperature sensors with limit value (AC+DC)** | **Codix 564**

Block diagram

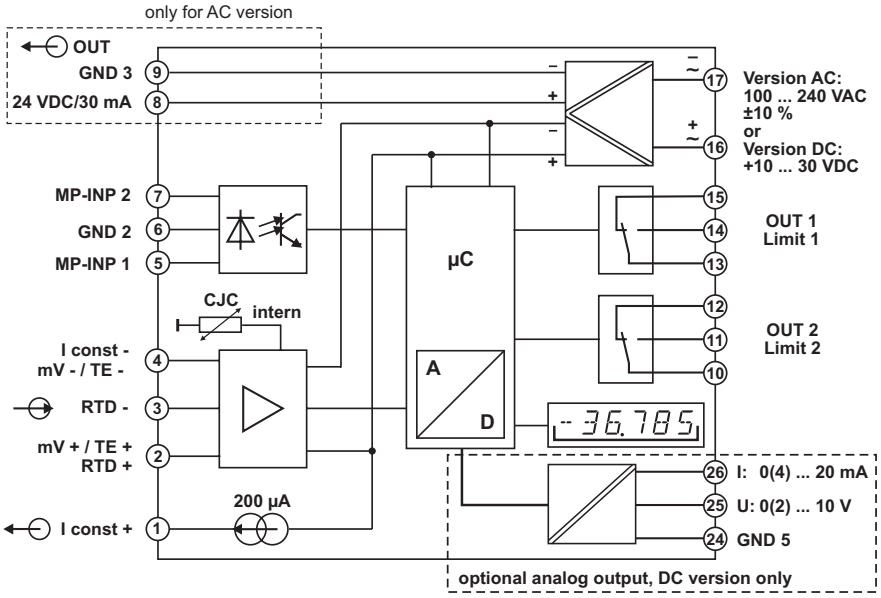

Dimensions

Dimensions in mm [inch]

