Ventilation duct sensor
For relative humidity and temperature
Model A2G-70

for further approvals
see page 4

Applications

- For measuring the relative humidity and temperature of gaseous media in ventilation ducts

Special features

- Electrical output signal DC 0 ... 10 V or 4 … 20 mA
- Modbus® output signal
- Simple mounting
- Compact and robust design
- Maintenance-free



Ventilation duct sensor, model A2G-70, without LC display

Description

The model A2G-70 ventilation duct sensor is a relative humidity sensor with an integrated temperature measurement, suitable for direct mounting on circular ventilation pipes or rectangular ventilation ducts.

The adjustable mounting flange enables a quick installation. The illuminated LC display provides good readability, even from a distance. The model A2G-70 has a screwless cover for rapid wiring and commissioning.

The measurement of relative humidity and the air temperature as the basis of demand-orientated control/regulation is gaining ever more importance in the ventilation and air-conditioning industry. The model A2G-70 registers the relative humidity and the temperature of the air with a capacitive sensor. The sensor signals for both measurement parameters are transmitted to the control/regulation or building automation with analogue output signals (0 ... 10 V, 4 … 20 mA) or digital Modbus® protocol.

WIKA
Part of your business

Specifications

Ventilation duct sensor, model A2G-70	
Version	■ Version without LC display ■ Version with LC display
Measuring range	
Temperature	0 … 50 °C [32 … 122 °F]
Relative humidity	0 … 100 %
Accuracy	
Temperature	< 0.5 °C [0.9 °F]
Relative humidity	±3 % (with measuring range 0 ... 90 %)
Power supply U_B	AC 24 V or DC 24 V ±10 %
Power consumption	Max. 110 mA
Electrical connection	Cable gland M16 Screw terminals max. 1.5 mm²
Output signal	■ DC 0 ... 10 V, load min. 1 kΩ ■ 4 ... 20 mA, load min. 20 Ω, max. 500 Ω ■ Modbus®
Material	
Case	Plastic (ABS)
Cover	Polycarbonate
Sensor sleeve	Plastic (ABS)
Mounting flange	LLPDP
Permissible temperatures	
Operating	0 … 50 °C [32 … 122 °F] (at sensor)
Ambient	-20 … +70 °C [-4 … +158 °F]
Relative humidity	0 ... 95 %, non-condensing
Ingress protection per IEC/EN 60529	IP54
Weight	150 g
Mounting	By means of adjustable mounting flange

Modbus® version

Modbus® communication	
Protocol	Modbus® via serial interface
Transfer mode	RTU
Interface	RS-485
Byte format	(11 bits) in RTU mode Coding system: 8 bits binary Bits per byte: - 1 Start bit - 8 data bits, least significant bit is sent first - 1 bit for parity - 1 stop bit
Baud rate	9,600, 19,200, 38,400 - selectable in the configuration
Modbus® addresses	1 … 247 addresses selectable in the configuration menu

Electrical connection

Output signal DC 0 … 10 V

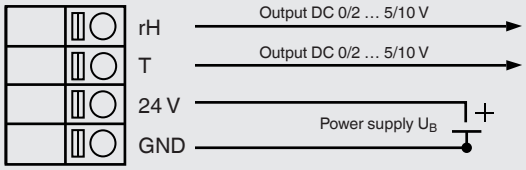

Output signal 4 … 20 mA

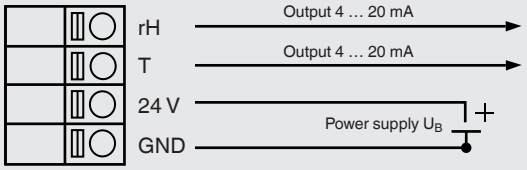

Modbus® output signal

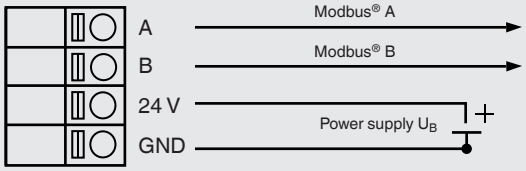

Dimensions in mm [in]

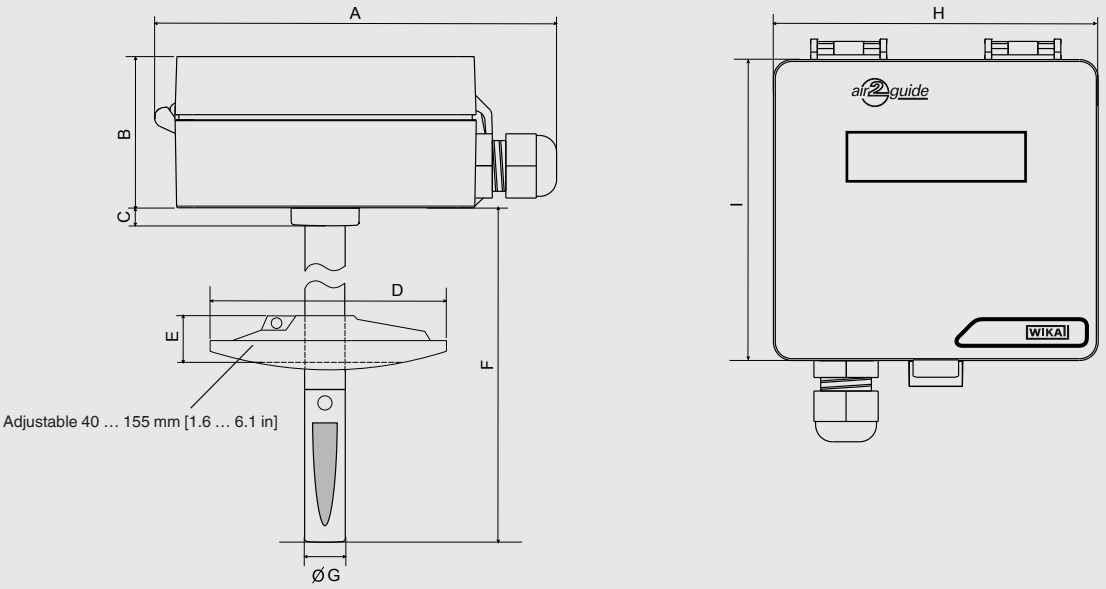

Dimensions in mm [in]								
A	B	C	D	E	F	Ø G	H	I
119 [4.69]	45 [1.77]	5.2 [0.2]	70 [2.76]	15 [0.59]	188 [7.4]	12 [0.47]	95.5 [3.76]	88.5 [3.48]

Approvals

Logo	Description	Country
CE	**EC declaration of conformity**	European Union
	EMC directive	
	RoHS conformity	
	WEEE directive	
EAC	**EAC (option)** Import certificate	Eurasian Economic Community
	KazInMetr (option) Metrology, measurement technology	Kazakhstan
-	**MTSCHS (option)** Permission for commissioning	Kazakhstan
	Uzstandard (option) Metrology, measurement technology	Uzbekistan

Certificates (option)

- 2.2 test report

Approvals and certificates, see website

Ordering information
Model / Version / Output Signal / Options

© 08/2008 WIKA Alexander Wiegand SE & Co. KG, all rights reserved.
The specifications given in this document represent the state of engineering at the time of publishing.
We reserve the right to make modifications to the specifications and materials.

WIKA Alexander Wiegand SE & Co. KG
Alexander-Wiegand-Straße 30
63911 Klingenberg/Germany
Tel. +49 9372 132-0
Fax +49 9372 132-406
info@wika.de
www.wika.de