RMS001

Draw wire encoder

DRAW WIRE ENCODER

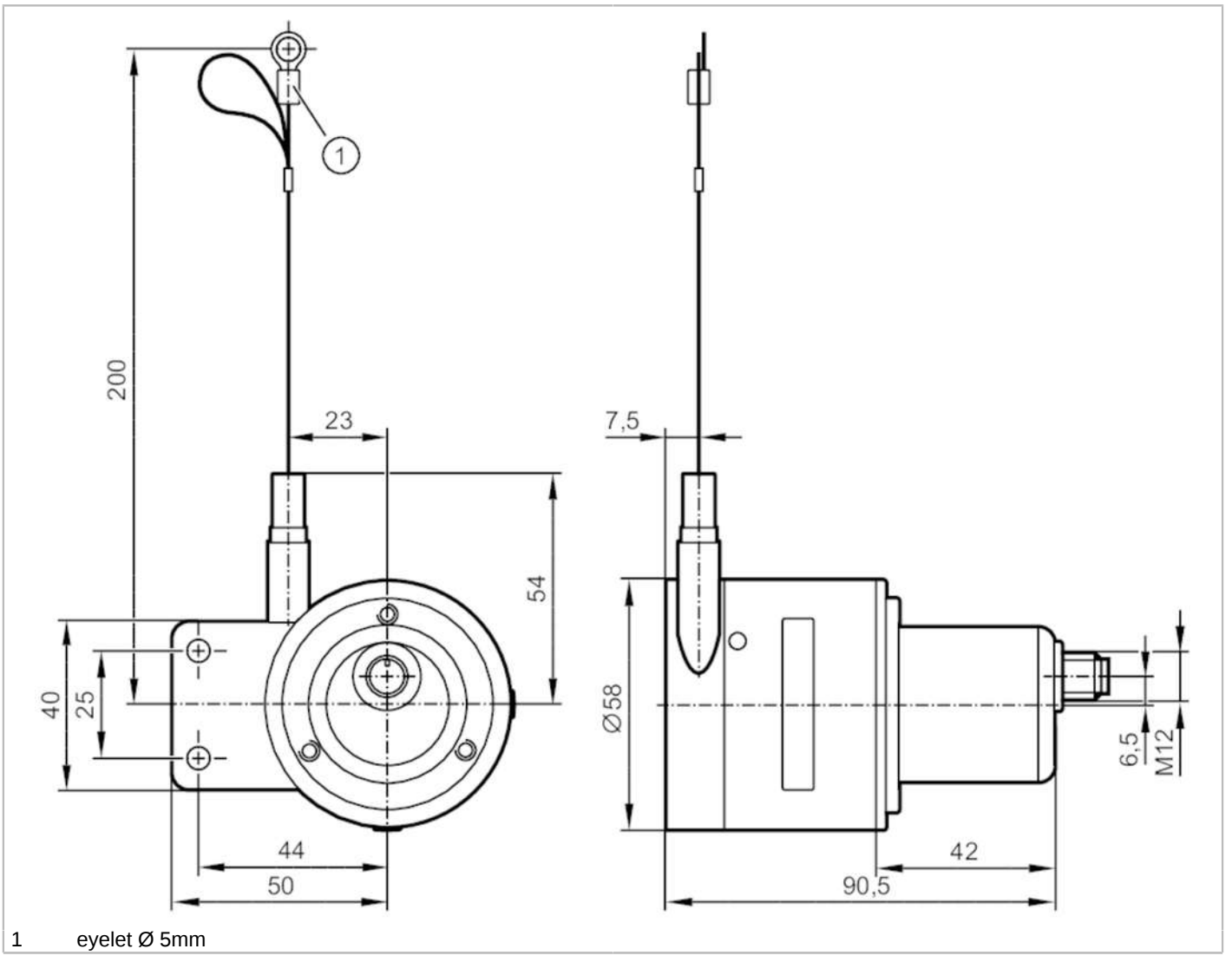

1 eyelet Ø 5mm

Product characteristics		
Resolution		8192 steps; 16 revolutions; 17 bit
Application		
Function principle		absolute
Detection system		magnetic
Application		encoder
Electrical data		
Operating voltage	[V]	8...32 DC
Current consumption	[mA]	< 20
Protection class		III
Reverse polarity protection		yes
Max. power-on delay time	[ms]	500
Settling time	[ms]	32
Inputs / outputs		
Number of inputs and outputs		Number of analogue outputs: 1

RMS001

Draw wire encoder

DRAW WIRE ENCODER

Outputs				
Number of analogue outputs				1
Analogue current output	[mA]			4...20
Max. load	[Ω]			500
Precision analogue output	[%]			0,1
Short-circuit protection				yes
Measuring/setting range				
Resolution				8192 steps; 16 revolutions; 17 bit
Accuracy / deviations				
Accuracy				± 0.02 % FSO
Repeatability				± 0,006 % FSO
Software / programming				
Parameter setting options				start position; end position; central position
Operating conditions				
Ambient temperature	[°C]			-40...85
Storage temperature	[°C]			-40...85
Max. relative air humidity	[%]			95; (condensation not permissible)
Protection				IP 64; (on the housing: IP 65)
Tests / approvals				
MTTF	[years]			241
Mechanical data				
Weight	[g]			561
Materials				housing: steel; wire drum: aluminium; wire: stainless steel polyamide coated
Max. measuring length	[mm]			1900
Wire drum circumference	[mm]			150
Wire diameter	[mm]			0.45
Wire connection				Ø 5 mm; (eyelet)
Wire properties		max. speed of wire displacement	[m /s]	2
		max. wire acceleration	[g]	12
		max. extension force	[N]	5
		max. retraction force	[N]	3,5

RMS001

Draw wire encoder

DRAW WIRE ENCODER

Electrical connection

Connector: 1 x M12, for axial use; coding: A

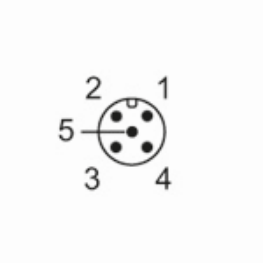

1 L+
2 analogue output
3 L-
4 Set2
5 Set1