Block assembly kit, Series AS5-MBR-...-W05

2024-08-13

R412009367

Series AS5

Qn = 14500 l/min



Technical data

Industry	Industrial
Port	G 1
Min. ambient temperature	-10 °C
Max. ambient temperature	50 °C
Weight	0.68 kg
Housing material	Die cast zinc
Surface housing	painted
Seal material	Acrylonitrile butadiene rubber
	R412009367

Dimensions

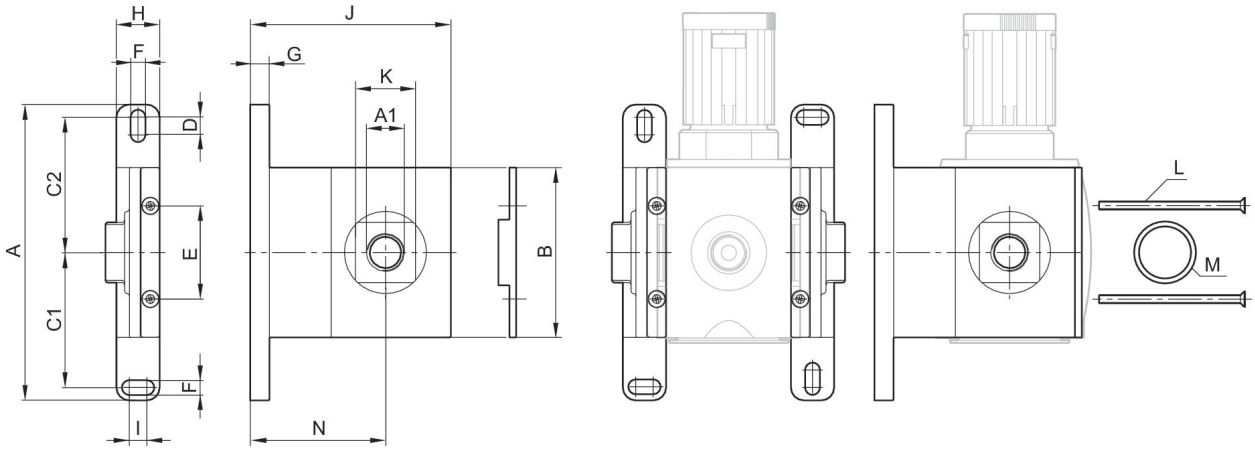

Block assembly kit, Series AS5-MBR-...-W05

2024-08-13

R412009367

Part No.	A1	A	B	C1	C2	D	E	F	G
R412009366	G 3/4	160	102	72.5	72.5	10	57	8.4	10
R412009367	G 1	160	102	72.5	72.5	10	57	8.4	10

Part No.	H	I	J	K	L	M	N
R412009366	30	10	127	41	M6x90	37x2,3	87
R412009367	30	10	127	41	M6x90	37x2,3	87