Flush handle with fixing clips 110 x 56.3 mm

Model : 19-7-3688



Door thickness: 0.75 to 1.5 mm.
Supplied with fixing clips.

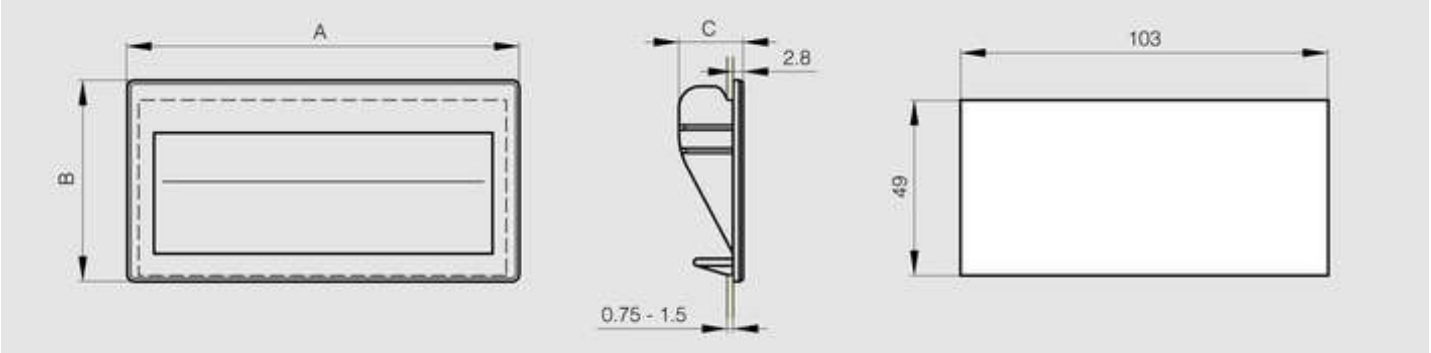

© PINET INDUSTRIE 2014

Material	ABS
Finish	black
A (length)	110
B (width)	56.3
C	18
Weight (g)	32
Material	plastic
Handles model	flush handles
Fixing system	with fixing clips

© PINET INDUSTRIE 2014