# Syphons and connecting pipes
# For pressure measuring instruments
# Model 910.15



## Applications

- Cooling element for protection from excessive heating of liquids, gases and vapours
- Protection from pressure spikes and pulsations
- Direct process connection of pressure measuring instruments or in combination with other instrumentation accessories (e.g. valves)

## Special features

- Compact version suitable for vibration applications
- Customer-specific combination of valves and measuring instruments (hook-up) on request
- Permissible temperatures to 550 °C
- Nominal pressures to 420 bar



**Syphons, model 910.15, stainless steel**
**Fig. left: Compact form**
**Fig. centre: U-form, DIN 16282 form B**
**Fig. right: Trumpet form, DIN 16282 form D**

## Description

The geometries of the syphons in accordance with DIN 16282 are divided into U-form and trumpet form. These syphon versions are available with threaded connection (forms A and C) or weld-in connection (forms B and D) to the process side.

In addition to the standardised syphons, connections for NPT threads following DIN 16282 and industrial standard variants are available.

Inside the syphon, condensate is collected, which prevents the ingress of hot media into the pressure measuring instrument. It is recommended to fill the syphon with a cooling separating liquid before commissioning the pressure line.

U-form syphons are intended for horizontal pressure tapping; trumpet-form syphons are intended for vertical pressure tapping.

The length-optimised compact form minimises the influence of vibrations and protects the pressure measuring instrument from pressure spikes and pulsations.

For applications that do not require a syphon, WIKA offers connecting pipes in a straight or angular form (pipe elbow 90°).



WIKA
Part of your business

# Pressure/temperature diagrams

**Syphon: Trumpet form, U-form**
**Connecting pipe: Angular form**

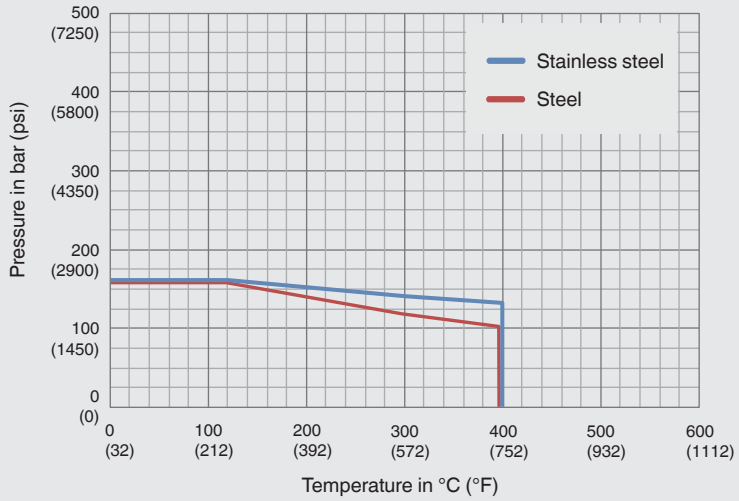


**Syphon: Compact form**

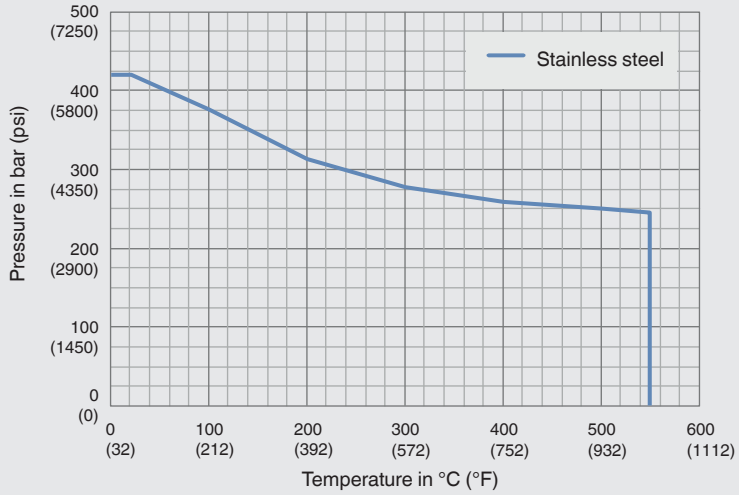


**Connecting pipe: Straight form**

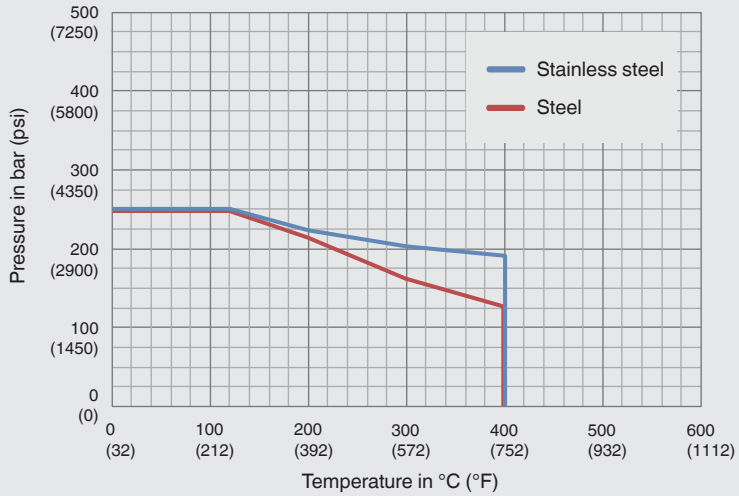

# Designs per DIN 16282

**Dimensions in mm [in]**

**U-form**
**Form A [4]**

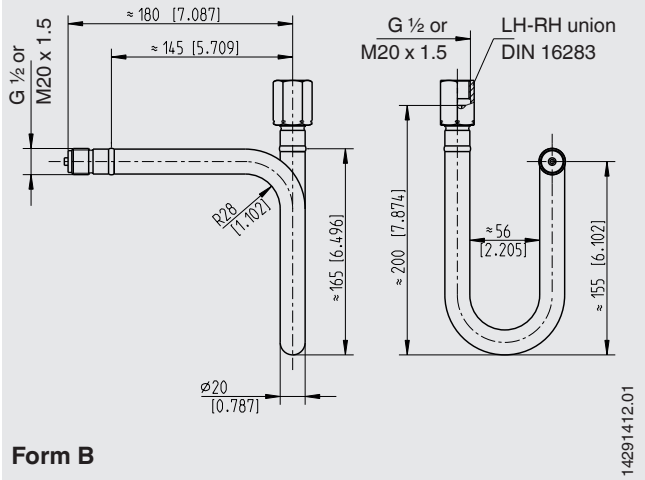


**Form B**

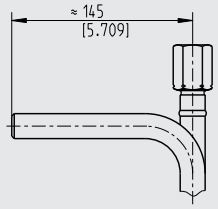


**Trumpet form**
**Form C [4]**

**Form D**

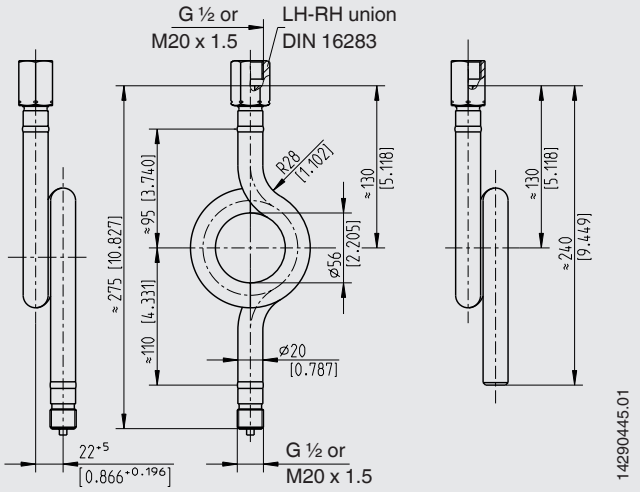


| Version | Inlet [1] | Outlet [2] | Max. operating pressure in bar [psi] | Order number | |
|---|---|---|---|---|---|
| | | | | Material of wetted parts | |
| | | | | Steel [3] | Stainless steel 1.4571 |
| **U-form, form A [4]** | G ½ B | G ½ LH-RH union | 160 [1,450] | 9091181 | 9091220 |
| **U-form, form B** | Weld-in connection | G ½ LH-RH union | 160 [1,450] | 9091190 | 1323270 |
| **Trumpet form, form C [4]** | G ½ B | G ½ LH-RH union | 160 [1,450] | 9091203 | 9091238 |
| **Trumpet form, form D** | Weld-in connection | G ½ LH-RH union | 160 [1,450] | 9091211 | 1440497 |

1) Process side
2) Instrument side
3) Pipe: Steel 1.0345, process connection: 1.1141
4) Definition per DIN 16282 rev. 11/1988

# Designs following DIN 16282

**Connection thread deviating from G ½ B and M20 x 1.5**

Dimensions in mm [in]

**U-form**

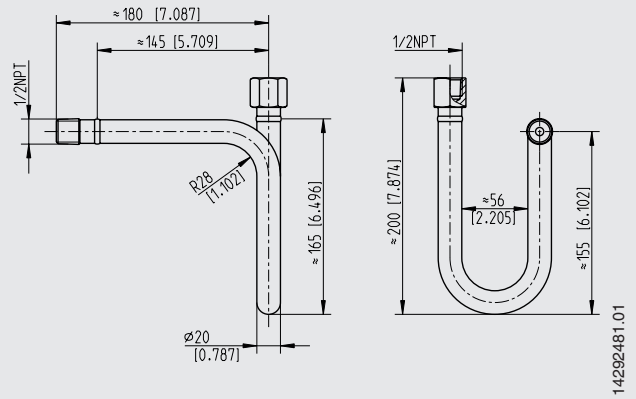


Thread machined onto pipe

**Trumpet form**

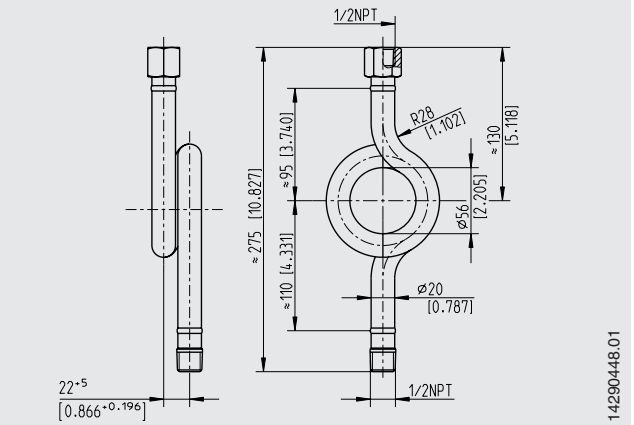


Thread machined onto pipe

| Version | Inlet [1] | Outlet [2] | Max. operating pressure in bar [psi] | Order number | |
|---|---|---|---|---|---|
| | | | | Material of wetted parts | |
| | | | | Steel 1.0345 | Stainless steel 1.4571 |
| **U-form** | ½ NPT, male | ½ NPT, fixed bushing | 160 [1,450] | - | 0731277 |
| **Trumpet form** | ½ NPT, male | ½ NPT, fixed bushing | 160 [1,450] | 1034227 | 0763349 |

1) Process side
2) Instrument side

## Industrial standard designs

Dimensions in mm [in]

**U-form**

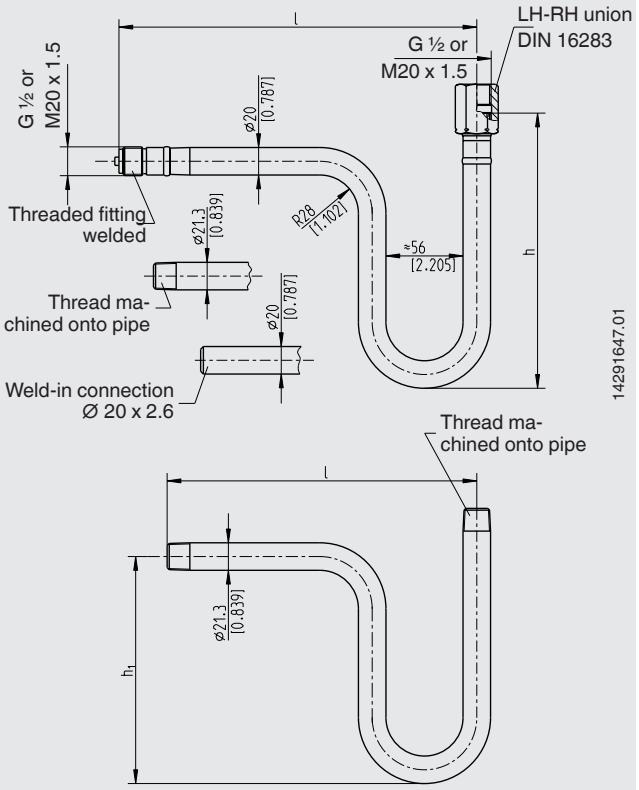


**Trumpet form**

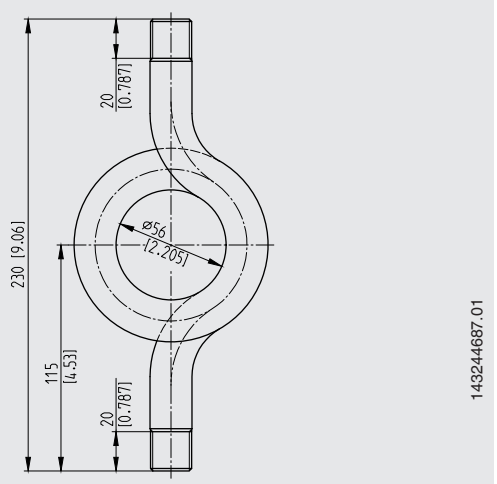


| Version | Inlet [1] | Outlet [2] | Max. operating pressure in bar [psi] | Dimensions in mm [in] | | | Order number | |
|---|---|---|---|---|---|---|---|---|
| | | | | l | $h_1$ | h | Material of wetted parts | |
| | | | | | | | Steel 1.0345 | Stainless steel 1.4571 |
| **U-form** | Weld-in connection | G ½ LH-RH union | 160 [1,450] | 218 [8.583] | 155 [6.102] | 200 [7.784] | 9090681 | 14130264 |
| **U-form** | G ½ B [3] | G ½ LH-RH union | 160 [1,450] | 253 [9.961] | 155 [6.102] | 200 [7.784] | 9090673 | - |
| **U-form** | G ½ B [4] | G ½ LH-RH union | 25 [362] | 225 [8.858] | 150 [5.905] | 205 [8.071] | 9090665 | - |
| **U-form** | G ½ B [4] | G ½ B [4] | 25 [362] | 225 [8.858] | 150 [5.905] | 170 [6.693] | 9090657 | 14090773 |
| **Trumpet form** | G ½ B [4] | G ½ LH-RH union | 25 [362] | 225 [8.858] | - | - | 39922306 | - |

1) Process side
2) Instrument side
3) Threaded fitting welded
4) Thread machined onto pipe

## Compact form

Dimensions in mm [in]

**Fixed connection threads**

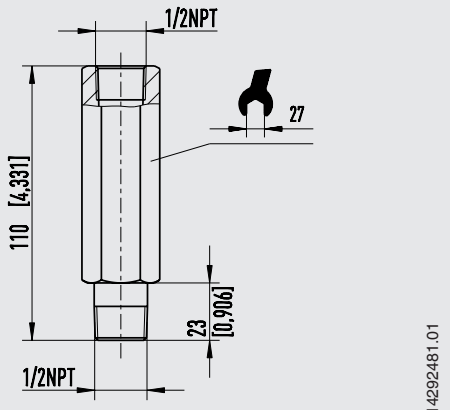


**LH-RH union on instrument side**

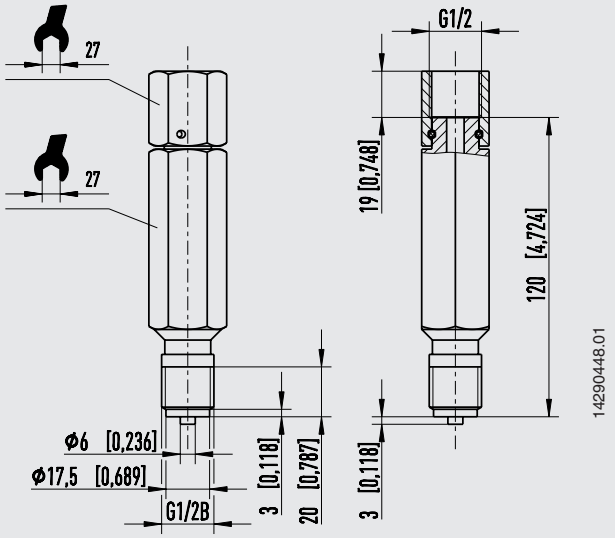


| Version | Inlet [1] | Outlet [2] | Max. operating pressure in bar [psi] | Order number<br>Material of wetted parts<br>Stainless steel 1.4571 |
|---|---|---|---|---|
| **Compact form** | ½ NPT, male | ½ NPT, female | 420 [6,091] | 11585791 |
| | G ½ B, male | G ½ LH-RH union | 420 [6,091] | 14114184 |

1) Process side
2) Instrument side

# Connecting pipes for pressure measuring instruments

Dimensions in mm [in]

**Straight form**

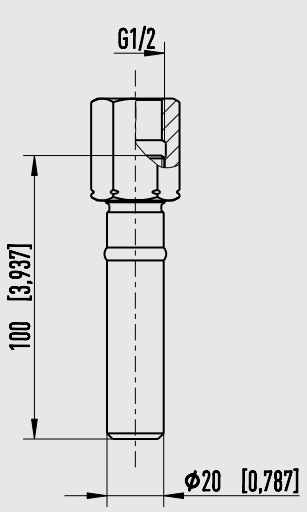


**Angular form (pipe elbow 90°)**

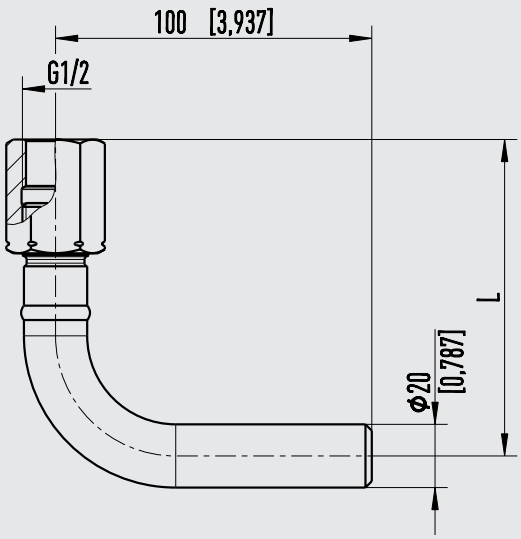


| Version | Inlet [1] | Outlet [2] | Max. operating pressure in bar [psi] | Order number | |
|---|---|---|---|---|---|
| | | | | Material of wetted parts | |
| | | | | Steel 1.0345 | Stainless steel 1.4571 |
| **Straight form** | Weld-in connection | G ½ LH-RH union | 250 [6,091] | 2243679 | 2112892 |
| **Angular form** | Weld-in connection | G ½ LH-RH union | 250 [6,091] | 2243687 | 2003612 |

1) Process side
2) Instrument side

## Ordering information

To order the described product the order number is sufficient. Options require additional specification.

© 05/1994 WIKA Alexander Wiegand SE & Co. KG, all rights reserved.
The specifications given in this document represent the state of engineering at the time of publishing.
We reserve the right to make modifications to the specifications and materials.



**WIKA Alexander Wiegand SE & Co. KG**
Alexander-Wiegand-Straße 30
63911 Klingenberg/Germany
Tel. +49 9372 132-0
Fax +49 9372 132-406
info@wika.de
www.wika.de