EUROSENSOR

# TEMPERATURE PROBE
# ETP - AM - SP - 100 - GAG10K3435A1
# ETP-AM-SP-M12X1.5-100-10K3435A1



- **Cost effective standard model**
- **Robust and compact design**
- **Fast response time**
- **Wide environmental temperature range**

The ETP-AM-SP-100-10K3435A1 and ETP-AM-SP-M12x1.5-100-10k3435A1 temperature probe provides a cost-effective measurement solution where heat, dust and moisture are prevalent and where a compact and robust high-reliability design is required. The sensor is particularly suitable for demanding temperature monitoring applications on vehicles but with its fast response time and wide environmental temperature range, it is equally well-equipped for measurement of liquids and gases used in medical equipment, test machinery, industrial instrumentation and process control systems.

| Specifications | |
|---|---|
| Element | NTC GAG10K3435A1 |
| Accuracy | ± 0.3 K @ +25 °C |
| Tolerance | ± 1% @ 25 °C |
| Beta value 25/85 | 3435 |
| Beta tolerance | ± 2% |
| Working temperature | -40°...+180 °C, short term 230 °C |
| Environmental temperature | -40°...+150°C |
| Sealing | IP67 |
| Response time in still water t90 | 7s |
| Material | |
| Housing | 316 stainless steel |
| Cable | FEP 4 core AWG24, tinned copper shield, 3.2 mm OD |
| Heat shrink | Elastomer |

## Dimensions and Wiring ETP-AM-SP-100-GAG10k3435A1

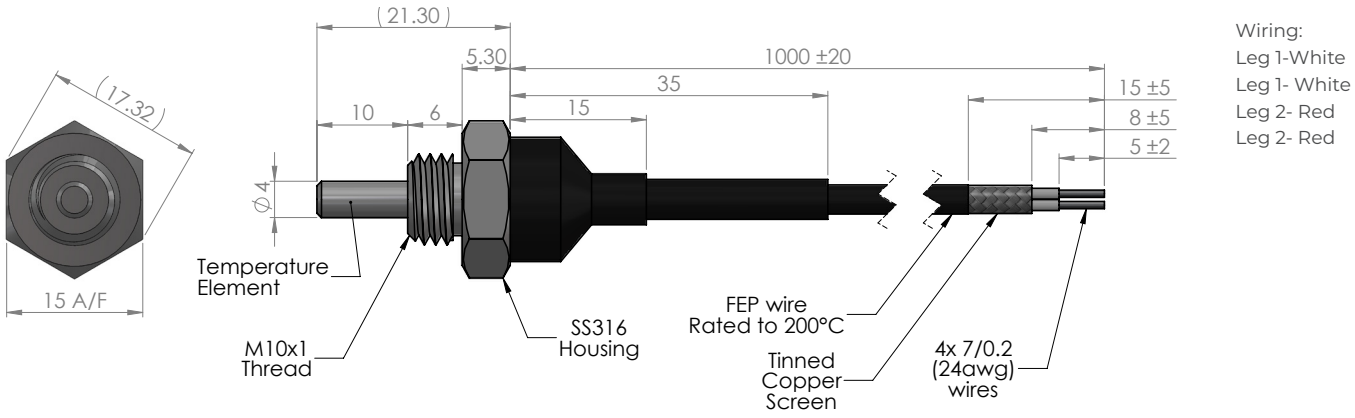


**Order Code**: 93638-ETP-AM-SP-100-10K3435A1 (on stock)

## Dimensions and Wiring ETP-AM-SP-M12x1.5-100-10k3435A1

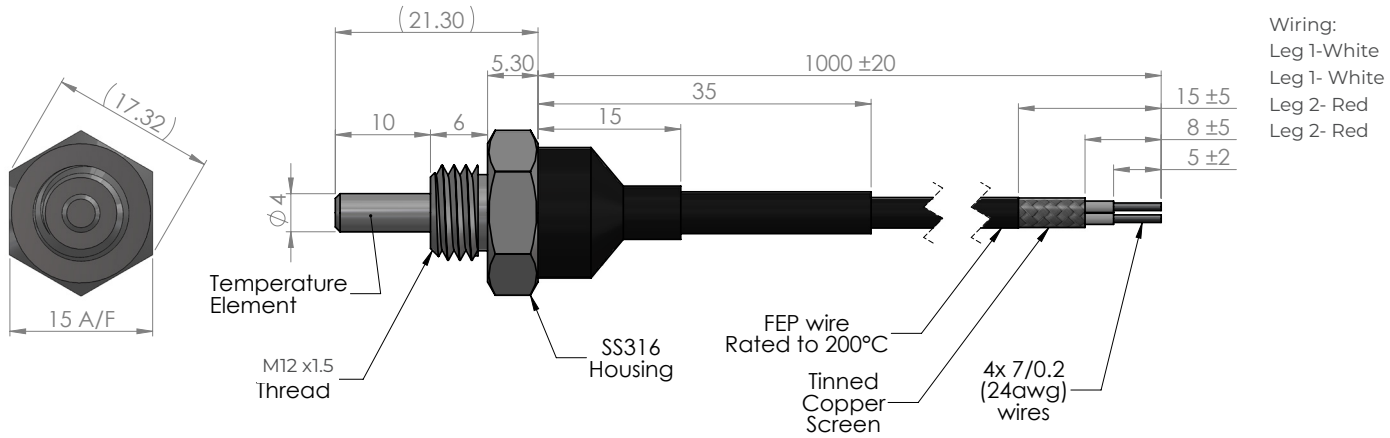


**Order Code**: 94885-ETP-AM-SP-M12x1.5-100-10k3435A1 (on request)

# TEMPERATURE PROBE
# ETP - AM - SP - 100 - GAG10K3435A1
# ETP-AM-SP-M12X1.5-100-10K3435A1

## Resistance versus temperature table for 10K3435A1

| Temp. °C | KΩ |
|---|---|
| -40 | 186 |
| -39 | 176.4 |
| -38 | 167.4 |
| -37 | 158.8 |
| -36 | 150.7 |
| -35 | 143.1 |
| -34 | 135.9 |
| -33 | 129.1 |
| -32 | 122.7 |
| -31 | 116.6 |
| -30 | 110.8 |
| -29 | 105.4 |
| -28 | 100.2 |
| -27 | 95.37 |
| -26 | 90.76 |
| -25 | 86.39 |
| -24 | 82.26 |
| -23 | 78.35 |
| -22 | 74.64 |
| -21 | 71.12 |
| -20 | 67.79 |
| -19 | 64.63 |
| -18 | 61.64 |
| -17 | 58.79 |
| -16 | 56.1 |
| -15 | 53.53 |
| -14 | 51.1 |
| -13 | 48.8 |
| -12 | 46.6 |
| -11 | 44.52 |
| -10 | 42.54 |
| -9 | 40.66 |
| -8 | 38.87 |
| -7 | 37.17 |
| -6 | 35.55 |
| -5 | 34.01 |
| -4 | 32.55 |
| -3 | 31.15 |
| -2 | 29.82 |
| -1 | 28.56 |
| 0 | 27.35 |
| 1 | 26.2 |

| Temp. °C | KΩ |
|---|---|
| 2 | 25.11 |
| 3 | 24.07 |
| 4 | 23.07 |
| 5 | 22.13 |
| 6 | 21.22 |
| 7 | 20.36 |
| 8 | 19.53 |
| 9 | 18.75 |
| 10 | 18 |
| 11 | 17.28 |
| 12 | 16.6 |
| 13 | 15.94 |
| 14 | 15.32 |
| 15 | 14.72 |
| 16 | 14.15 |
| 17 | 13.6 |
| 18 | 13.08 |
| 19 | 12.58 |
| 20 | 12.1 |
| 21 | 11.64 |
| 22 | 11.21 |
| 23 | 10.79 |
| 24 | 10.38 |
| 25 | 10 |
| 26 | 9.631 |
| 27 | 9.278 |
| 28 | 8.94 |
| 29 | 8.615 |
| 30 | 8.304 |
| 31 | 8.006 |
| 32 | 7.72 |
| 33 | 7.445 |
| 34 | 7.182 |
| 35 | 6.929 |
| 36 | 6.687 |
| 37 | 6.454 |
| 38 | 6.23 |
| 39 | 6.015 |
| 40 | 5.809 |
| 41 | 5.611 |
| 42 | 5.42 |
| 43 | 5.237 |

| Temp. °C | KΩ |
|---|---|
| 44 | 5.061 |
| 45 | 4.891 |
| 46 | 4.729 |
| 47 | 4.572 |
| 48 | 4.421 |
| 49 | 4.276 |
| 50 | 4.137 |
| 51 | 4.003 |
| 52 | 3.873 |
| 53 | 3.749 |
| 54 | 3.629 |
| 55 | 3.513 |
| 56 | 3.402 |
| 57 | 3.295 |
| 58 | 3.192 |
| 59 | 3.092 |
| 60 | 2.996 |
| 61 | 2.903 |
| 62 | 2.814 |
| 63 | 2.728 |
| 64 | 2.645 |
| 65 | 2.565 |
| 66 | 2.487 |
| 67 | 2.413 |
| 68 | 2.341 |
| 69 | 2.271 |
| 70 | 2.204 |
| 71 | 2.139 |
| 72 | 2.076 |
| 73 | 2.016 |
| 74 | 1.957 |
| 75 | 1.901 |
| 76 | 1.846 |
| 77 | 1.794 |
| 78 | 1.743 |
| 79 | 1.693 |
| 80 | 1.645 |
| 81 | 1.599 |
| 82 | 1.555 |
| 83 | 1.511 |
| 84 | 1.47 |
| 85 | 1.429 |

| Temp. °C | KΩ |
|---|---|
| 86 | 1.39 |
| 87 | 1.352 |
| 88 | 1.315 |
| 89 | 1.28 |
| 90 | 1.245 |
| 91 | 1.212 |
| 92 | 1.18 |
| 93 | 1.149 |
| 94 | 1.118 |
| 95 | 1.089 |
| 96 | 1.06 |
| 97 | 1.033 |
| 98 | 1.006 |
| 99 | 0.9801 |
| 100 | 0.9549 |
| 101 | 0.9305 |
| 102 | 0.9069 |
| 103 | 0.8839 |
| 104 | 0.8616 |
| 105 | 0.84 |
| 106 | 0.819 |
| 107 | 0.7987 |
| 108 | 0.7789 |
| 109 | 0.7597 |
| 110 | 0.7411 |
| 111 | 0.723 |
| 112 | 0.7054 |
| 113 | 0.6883 |
| 114 | 0.6718 |
| 115 | 0.6556 |
| 116 | 0.64 |
| 117 | 0.6248 |
| 118 | 0.61 |
| 119 | 0.5956 |
| 120 | 0.5817 |
| 121 | 0.5681 |
| 122 | 0.5549 |
| 123 | 0.542 |
| 124 | 0.5295 |
| 125 | 0.5174 |
| 126 | 0.5056 |
| 127 | 0.4941 |

# TEMPERATURE PROBE
# ETP - AM - SP - 100 - GAG10K3435A1
# ETP-AM-SP-M12X1.5-100-10K3435A1

## Resistance versus temperature table for 10K3435A1

| Temp. °C | KΩ |
|---|---|
| 128 | 0.4829 |
| 129 | 0.472 |
| 130 | 0.4614 |
| 131 | 0.4511 |
| 132 | 0.4411 |
| 133 | 0.4313 |
| 134 | 0.4218 |
| 135 | 0.4125 |
| 136 | 0.4035 |
| 137 | 0.3947 |
| 138 | 0.3862 |
| 139 | 0.3778 |
| 140 | 0.3697 |
| 141 | 0.3618 |
| 142 | 0.3541 |
| 143 | 0.3466 |
| 144 | 0.3392 |
| 145 | 0.3321 |
| 146 | 0.3252 |
| 147 | 0.3184 |
| 148 | 0.3118 |
| 149 | 0.3053 |
| 150 | 0.299 |
| 151 | 0.2929 |
| 152 | 0.2869 |
| 153 | 0.2811 |
| 154 | 0.2754 |
| 155 | 0.2698 |
| 156 | 0.2644 |
| 157 | 0.2591 |
| 158 | 0.2539 |

| Temp. °C | KΩ |
|---|---|
| 159 | 0.2489 |
| 160 | 0.244 |
| 161 | 0.2392 |
| 162 | 0.2345 |
| 163 | 0.2299 |
| 164 | 0.2255 |
| 165 | 0.2211 |
| 166 | 0.2168 |
| 167 | 0.2127 |
| 168 | 0.2086 |
| 169 | 0.2046 |
| 170 | 0.2007 |
| 171 | 0.197 |
| 172 | 0.1932 |
| 173 | 0.1896 |
| 174 | 0.1861 |
| 175 | 0.1826 |
| 176 | 0.1793 |
| 177 | 0.1759 |
| 178 | 0.1727 |
| 179 | 0.1696 |
| 180 | 0.1665 |
| 181 | 0.1634 |
| 182 | 0.1605 |
| 183 | 0.1576 |
| 184 | 0.1548 |
| 185 | 0.152 |
| 186 | 0.1493 |
| 187 | 0.1467 |
| 188 | 0.1441 |
| 189 | 0.1415 |

| Temp. °C | KΩ |
|---|---|
| 190 | 0.1391 |
| 191 | 0.1366 |
| 192 | 0.1343 |
| 193 | 0.1319 |
| 194 | 0.1297 |
| 195 | 0.1274 |
| 196 | 0.1253 |
| 197 | 0.1231 |
| 198 | 0.121 |
| 199 | 0.119 |
| 200 | 0.117 |
| 201 | 0.115 |
| 202 | 0.1131 |
| 203 | 0.1112 |
| 204 | 0.1094 |
| 205 | 0.1076 |
| 206 | 0.1058 |
| 207 | 0.1041 |
| 208 | 0.1024 |
| 209 | 0.1007 |
| 210 | 0.0991 |
| 211 | 0.0975 |
| 212 | 0.0959 |
| 213 | 0.0944 |
| 214 | 0.0929 |
| 215 | 0.0914 |
| 216 | 0.0899 |
| 217 | 0.0885 |
| 218 | 0.0871 |
| 219 | 0.0858 |
| 220 | 0.0844 |

| Temp. °C | KΩ |
|---|---|
| 221 | 0.0831 |
| 222 | 0.0818 |
| 223 | 0.0806 |
| 224 | 0.0793 |
| 225 | 0.0781 |
| 226 | 0.0769 |
| 227 | 0.0757 |
| 228 | 0.0746 |
| 229 | 0.0735 |
| 230 | 0.0724 |
| 231 | 0.0713 |
| 232 | 0.0702 |
| 233 | 0.0692 |
| 234 | 0.0681 |
| 235 | 0.0671 |
| 236 | 0.0661 |
| 237 | 0.0652 |
| 238 | 0.0642 |
| 239 | 0.0633 |
| 240 | 0.0624 |
| 241 | 0.0615 |
| 242 | 0.0606 |
| 243 | 0.0597 |
| 244 | 0.0589 |
| 245 | 0.058 |
| 246 | 0.0572 |
| 247 | 0.0564 |
| 248 | 0.0556 |
| 249 | 0.0548 |
| 250 | 0.054 |