EBC013

Splitter box

ZDO4H050MSS0005H07

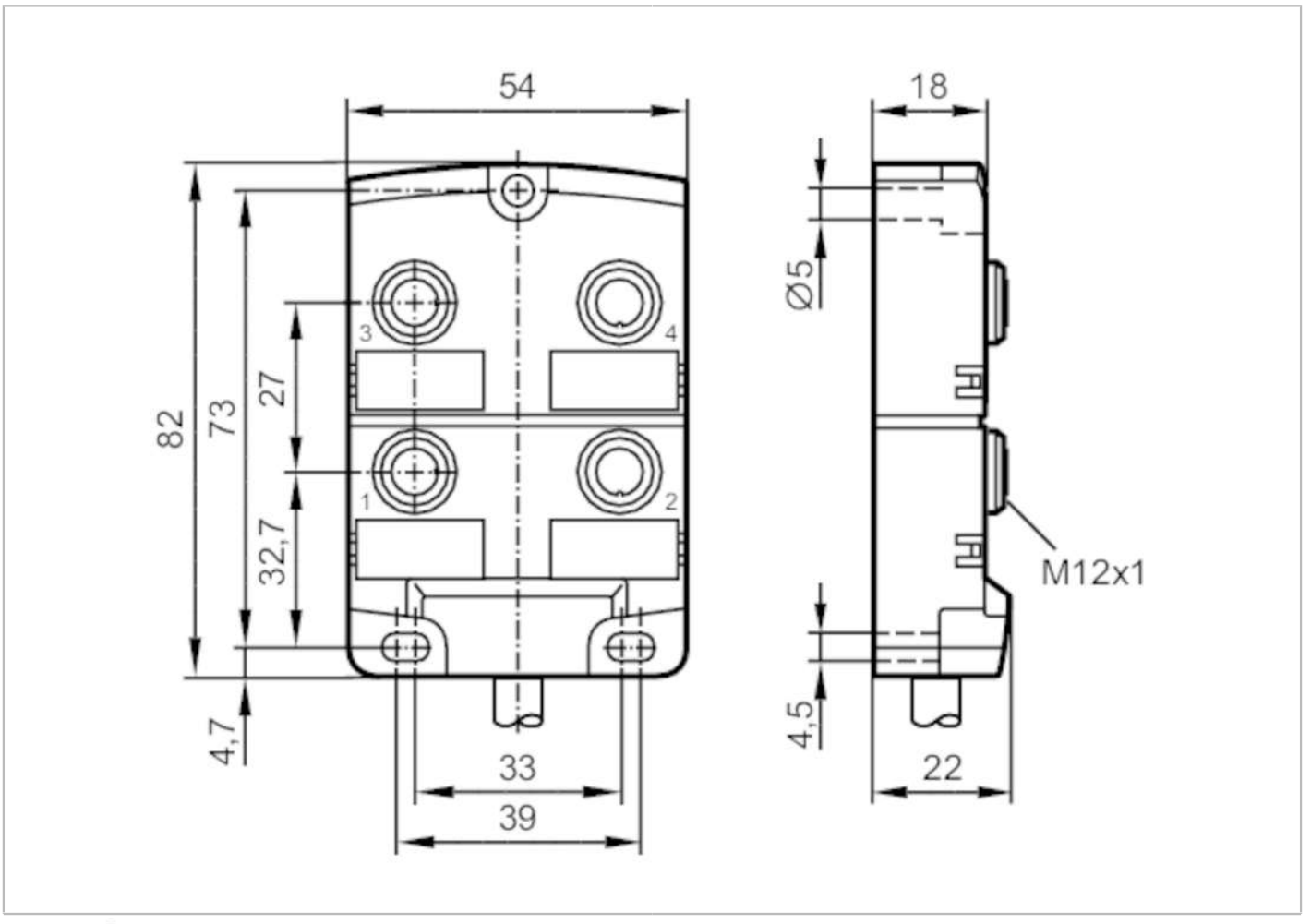

Application			
Special feature		Free from silicone; Halogen-free; Gold-plated contacts; Drag chain suitability	
Free from silicone		yes	
Electrical data			
Operating voltage	[V]	< 30 DC; ("supply class 2" to cULus)	
Protection class		II	
Max. current load per module/slot	[A]	4	
Max. current load total	[A]	12	
Operating conditions			
Ambient temperature	[°C]	-25...80	
Ambient temperature (moving)	[°C]	-5...60	
Protection		IP 67; IP 68	
Tests / approvals			
UL approval		Enclosure type	Type 1
Mechanical data			
Weight	[g]	537	

EBC013

Splitter box

ZDO4H050MSS0005H07

Dimensions	[mm]	18 x 54 x 82	
Materials		PA	
Moulded-body material		PA	
Number of ports splitter box		4	
Connector type		M12	
Drag chain suitability		yes	
Drag chain suitability		bending radius for flexible use	min. 10 x cable diameter
		bending cycles	> 2 Mio.

Accessories

Items supplied	Protective caps: 2
	labels: 4

Remarks

Pack quantity	1 pcs.

Electrical connection

Cable: 5 m, PUR, Halogen-free, black, Ø 7.5 mm; 4 x 0.34 mm² (43 x Ø 0.1 mm) + 3 x 1 mm² (55 x Ø 0.15 mm)

Electrical connection - slot

Connector: 4 x M12; coding: A; Moulded body: PA; Contacts: gold-plated; Tightening torque: 0.8...1.5 Nm

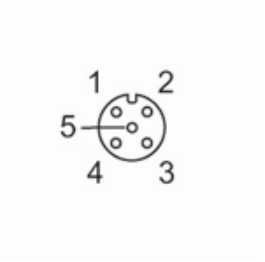

EBC013

Splitter box

ZDO4H050MSS0005H07

Connection

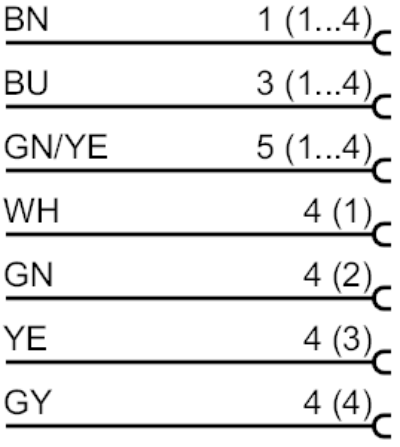

	Core colours :
BN =	brown
BU =	blue
GN =	green
GY =	grey
WH =	white
YE =	yellow