OBF505

Fibre-optic amplifier

OBF-FAKG/T/AS

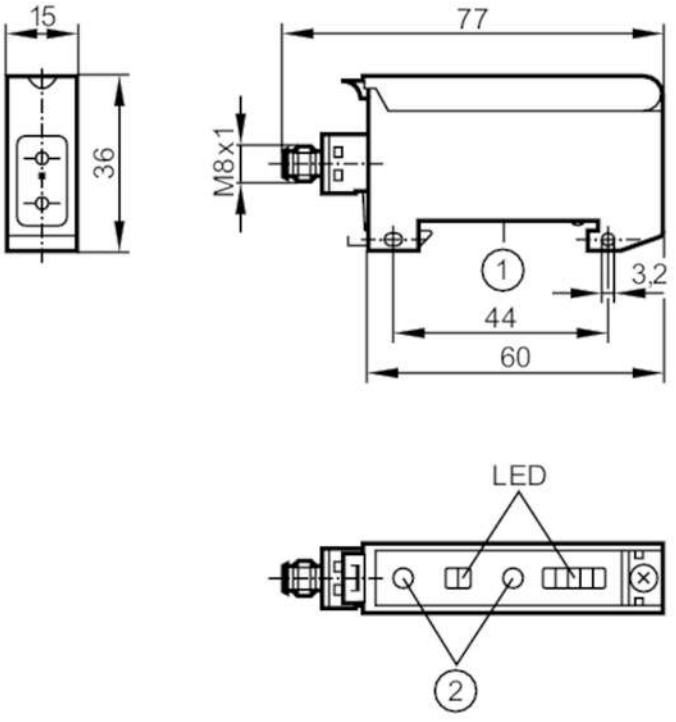

1 mounting on DIN rail
2 setting pushbuttons

Product characteristics		
Type of light		red light
Housing		rectangular
Application		
Special feature		Function check output
Design		Fibre-optic amplifiers for glass fibre optics, for fibre optics with metal sheath, FE/FT-50
Electrical data		
Operating voltage	[V]	10...30 DC
Current consumption	[mA]	< 50
Protection class		III
Reverse polarity protection		yes
Type of light		red light
Outputs		
Electrical design		PNP/NPN; (automatic load detection PNP/NPN)
Output function		light-on/dark-on mode; (programmable)
Max. voltage drop switching output DC	[V]	2.5
Function check output		yes
Max. voltage drop of function check output	[V]	2.5
Max. current load for function check output	[mA]	10

OBF505

Fibre-optic amplifier

OBF-FAKG/T/AS

Permanent current rating of switching output DC	[mA]	100	
Switching frequency DC	[Hz]	1000	
Short-circuit protection		yes	
Type of short-circuit protection		pulsed	
Overload protection		yes	
Time function	[s]	0.001...0.09	
Detection zone			
Range	[m]	0...1; (Through-beam sensor)	
Range	[mm]	0...150; (Diffuse reflection sensor)	
Range adjustable		yes	
Operating conditions			
Ambient temperature	[°C]	-25...60	
Protection		IP 65	
Tests / approvals			
EMC		EN 60947-5-2	
MTTF	[years]	806	
Mechanical data			
Weight	[g]	47.8	
Housing		rectangular	
Type of mounting		mounting on DIN rail; (TH35 (EN 60715))	
Dimensions	[mm]	36 x 15 x 60	
Materials		PPE modified	
Lens alignment		side lens	
Displays / operating elements			
Display		switching status	1 x LED, yellow
		operation	1 x LED, green
		unsafe zone	1 x LED, red
		excess gain	4 x LED, green
Remarks			
Remarks		light-on mode corresponds to the NC output function for through-beam fibre optics	
		corresponds to the NO output function for diffuse-reflection fibre optics	
		dark-on mode corresponds to the NO output function for through-beam fibre optics	
		corresponds to the NC output function for diffuse-reflection fibre optics	
		operating voltage "supply class 2" according to cULus	
Pack quantity		1 pcs.	

OBF505

Fibre-optic amplifier

OBF-FAKG/T/AS

Electrical connection

Connector: 1 x M8; coding: A



Connection

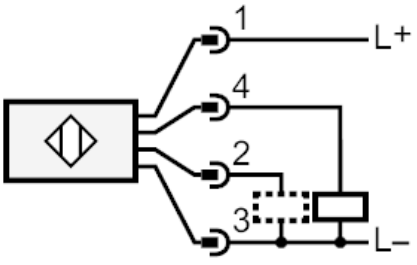

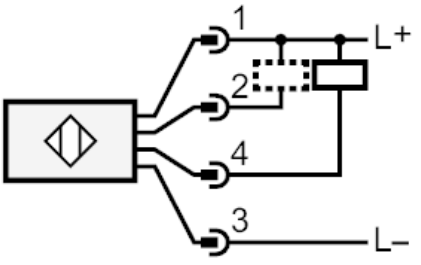

2	Function check output