DATASHEET - DILA-XHI02



Auxiliary contact module, 2 pole, Ith= 16 A, 2 NC, Front fixing, Screw terminals, DILA, DILM7 - DILM38

Part no.	**DILA-XHI02**
Catalog No.	**276420**
Alternate Catalog No.	**XTCEXFAC02**
EL-Nummer (Norway)	**4130212**

Delivery program

Accessories			Auxiliary contact modules
Description			with interlocked opposing contacts Switching elements according to EN 50005 Version E combinations correspond to EN 50011 and are to be preferred. The DC operated contactor DILA(C)-22 must only be combined with 2-pole auxiliary contacts.
Function			for standard applications
Number of poles			2 pole
Connection technique			Screw terminals
Rated operational current			
Conventional free air thermal current, 1 pole			
Open			
at 60 °C	I_{th}	A	16
AC-15			
220 V 230 V 240 V	I_e	A	4
380 V 400 V 415 V	I_e	A	4
Contacts			
N/C = Normally closed			2 NC
Mounting type			Front fixing
Contact sequence			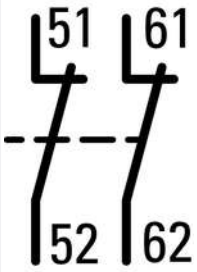
For use with			DILA(C)… DILM(C)7… DILM(C)9… DILM(C)12… DILM(C)15… DILM(C)17… DILM(C)25… DILM(C)32… DILM38… DILMP20… DILMP32… DILMP45… DILL… DILMF8… DILMF11… DILMF14… DILMF17… DILMF25… DILMF32…
Type			Front mounting auxiliary contact
Instructions			Interlocked opposing contacts according to IEC/EN 60947-5-1 appendix L, inside the auxiliary contact modules, also for the integrated auxiliary contacts of the DILM 7 - DILM32 Auxiliary contacts used as mirror contacts according to IEC/EN 60947-4-1 Appendix F (not N/C late open)
Code number and version of combination			
Distinctive number			42 E

with basic device			DILA(C)-40
			33
with basic device			DILA(C)-31
			24
with basic device			DILA(C)-22

Technical data

General

Standards			IEC/EN 60947, VDE 0660, UL, CSA
Lifespan, mechanical			
AC operated	Operations	x 10^6	10
DC operated	Operations	x 10^6	10
Component lifespan			
at U_e = 230 V, AC-15, 3 A	Operations	x 10^6	1.3
Maximum operating frequency	Operations/h		9000
Climatic proofing			Damp heat, constant, to IEC 60068-2-78 Damp heat, cyclic, to IEC 60068-2-30
Ambient temperature			
Open		°C	-25 - +60
Enclosed		°C	- 25 - 40
Ambient temperature, storage		°C	- 40 - 80
Mounting position			
Mounting position			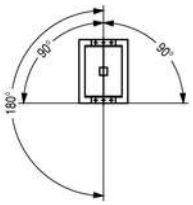
Mechanical shock resistance (IEC/EN 60068-2-27)			
Half-sinusoidal shock, 10 ms			
Basic unit with auxiliary contact module		g	
N/O contact		g	7
N/C contact		g	5
Degree of Protection			IP20
Protection against direct contact when actuated from front (EN 50274)			Finger and back-of-hand proof
Weight		kg	0.038
Terminal capacities		mm^2	
Screw terminals			
Solid		mm^2	1 x (0.75 - 2.5) 2 x (0.75 - 2.5)
Flexible with ferrule		mm^2	1 x (0.75 - 2.5) 2 x (0.75 - 2.5)
Solid or stranded		AWG	18 – 14
Terminal screw			M3.5
Pozidriv screwdriver		Size	2
Standard screwdriver		mm	0.8 x 5.5 1 x 6
Max. tightening torque		Nm	1.2

Contacts

Interlocked opposing contacts within an auxiliary contact module (to IEC 60947-5-1 Annex L)			Yes
N/C contact (not late-break contact) suitable as a mirror contact (to IEC/EN 60947-4-1 Annex F)			DILM7 - DILM32
Rated impulse withstand voltage	U_{imp}	V AC	6000
Overvoltage category/pollution degree			III/3
Rated insulation voltage	U_i	V AC	690
Rated operational voltage	U_e	V AC	500

Safe isolation to EN 61140			
between coil and auxiliary contacts		V AC	400
between the auxiliary contacts		V AC	400
Rated operational current		A	
Conventional free air thermal current, 1 pole			
at 60 °C	I_{th}	A	16
AC-15			
220 V 230 V 240 V	I_e	A	4
380 V 400 V 415 V	I_e	A	4
500 V	I_e	A	1.5
DC current			
			Switch-on and switch-off conditions based on DC-13, time constant as specified.
DC L/R ≦ 15 ms			
Contacts in series:		A	
1	24 V	A	10
1	60 V	A	6
2	60 V	A	10
1	110 V	A	3
3	110 V	A	6
1	220 V	A	1
3	220 V	A	5
DC L/R ≦ 50 ms			
Contacts in series:		A	
3	24 V	A	2.5
3	60 V	A	1
3	110 V	A	0.5
3	220 V	A	0.25
DC-13 (6xP)			
24 V	I_e	A	2.5
60 V	I_e	A	1
110 V	I_e	A	0.5
220 V	I_e	A	0.25
Control circuit reliability	Failure rate	λ	$<10^{-8}$, < one failure at 100 million operations (at U_e = 24 V DC, U_{min} = 17 V, I_{min} = 5.4 mA)
Short-circuit rating without welding			
Short-circuit protection maximum fuse			
500 V		A gG/gL	10
Current heat loss at I_{th}			
AC operated		W	2.6
DC operated		W	2.6
Current heat loss per auxiliary circuit at I_e (AC-15/230 V)		CO	0.16

Rating data for approved types

Auxiliary contacts			
Pilot Duty			
AC operated			A600
DC operated			P300
General Use			
AC		V	600
AC		A	10
DC		V	250
DC		A	1

Design verification as per IEC/EN 61439

Technical data for design verification			
Rated operational current for specified heat dissipation	I_n	A	4

Heat dissipation per pole, current-dependent	P_{vid}	W	0.16
Equipment heat dissipation, current-dependent	P_{vid}	W	0
Static heat dissipation, non-current-dependent	P_{vs}	W	0
Heat dissipation capacity	P_{diss}	W	0
Operating ambient temperature min.		°C	-25
Operating ambient temperature max.		°C	60
IEC/EN 61439 design verification			
10.2 Strength of materials and parts			
10.2.2 Corrosion resistance			Meets the product standard's requirements.
10.2.3.1 Verification of thermal stability of enclosures			Meets the product standard's requirements.
10.2.3.2 Verification of resistance of insulating materials to normal heat			Meets the product standard's requirements.
10.2.3.3 Verification of resistance of insulating materials to abnormal heat and fire due to internal electric effects			Meets the product standard's requirements.
10.2.4 Resistance to ultra-violet (UV) radiation			Meets the product standard's requirements.
10.2.5 Lifting			Does not apply, since the entire switchgear needs to be evaluated.
10.2.6 Mechanical impact			Does not apply, since the entire switchgear needs to be evaluated.
10.2.7 Inscriptions			Meets the product standard's requirements.
10.3 Degree of protection of ASSEMBLIES			Does not apply, since the entire switchgear needs to be evaluated.
10.4 Clearances and creepage distances			Meets the product standard's requirements.
10.5 Protection against electric shock			Does not apply, since the entire switchgear needs to be evaluated.
10.6 Incorporation of switching devices and components			Does not apply, since the entire switchgear needs to be evaluated.
10.7 Internal electrical circuits and connections			Is the panel builder's responsibility.
10.8 Connections for external conductors			Is the panel builder's responsibility.
10.9 Insulation properties			
10.9.2 Power-frequency electric strength			Is the panel builder's responsibility.
10.9.3 Impulse withstand voltage			Is the panel builder's responsibility.
10.9.4 Testing of enclosures made of insulating material			Is the panel builder's responsibility.
10.10 Temperature rise			The panel builder is responsible for the temperature rise calculation. Eaton will provide heat dissipation data for the devices.
10.11 Short-circuit rating			Is the panel builder's responsibility. The specifications for the switchgear must be observed.
10.12 Electromagnetic compatibility			Is the panel builder's responsibility. The specifications for the switchgear must be observed.
10.13 Mechanical function			The device meets the requirements, provided the information in the instruction leaflet (IL) is observed.

Technical data ETIM 7.0

Low-voltage industrial components (EG000017) / Auxiliary contact block (EC000041)			
Electric engineering, automation, process control engineering / Low-voltage switch technology / Component for low-voltage switching technology / Auxiliary switch block (ecl@ss10.0.1-27-37-13-02 [AKN342013])			
Number of contacts as change-over contact			0
Number of contacts as normally open contact			0
Number of contacts as normally closed contact			2
Number of fault-signal switches			0
Rated operation current Ie at AC-15, 230 V		A	4
Type of electric connection			Screw connection
Model			Top mounting
Mounting method			Front fastening
Lamp holder			None

Approvals

Product Standards			IEC/EN 60947-4-1; UL 508; CSA-C22.2 No. 14-05; CE marking
UL File No.			E29184
UL Category Control No.			NKCR
CSA File No.			012528
CSA Class No.			3211-03
North America Certification			UL listed, CSA certified

Specially designed for North America	No

Dimensions

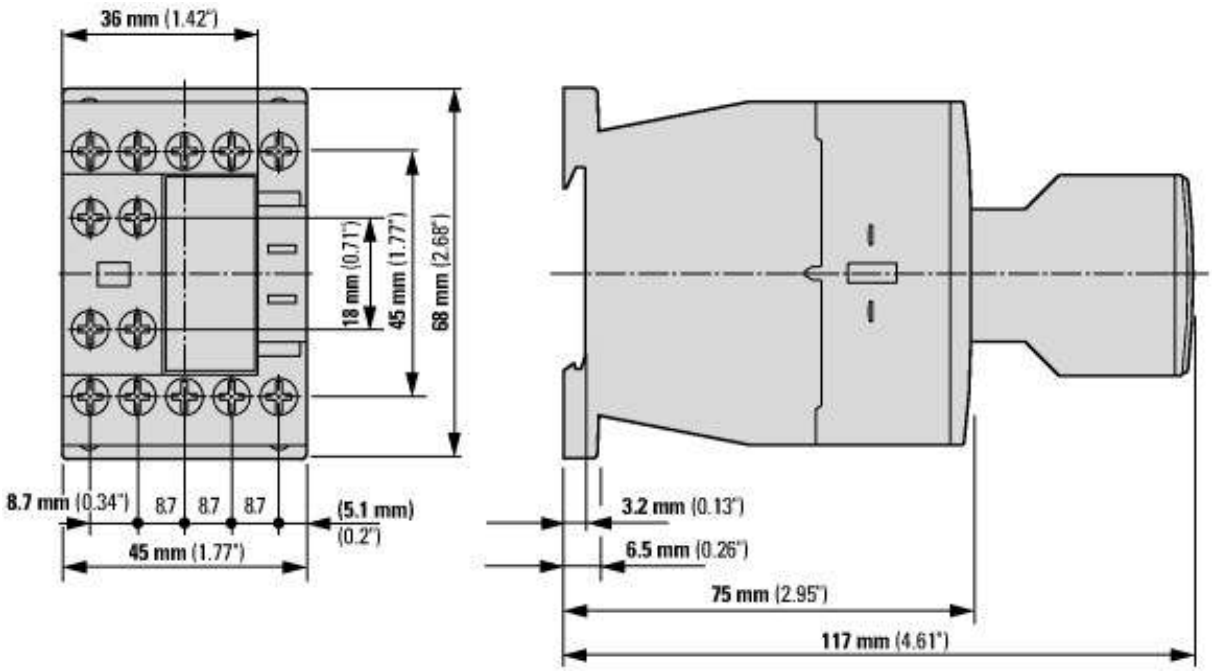

Contactor with auxiliary contact module

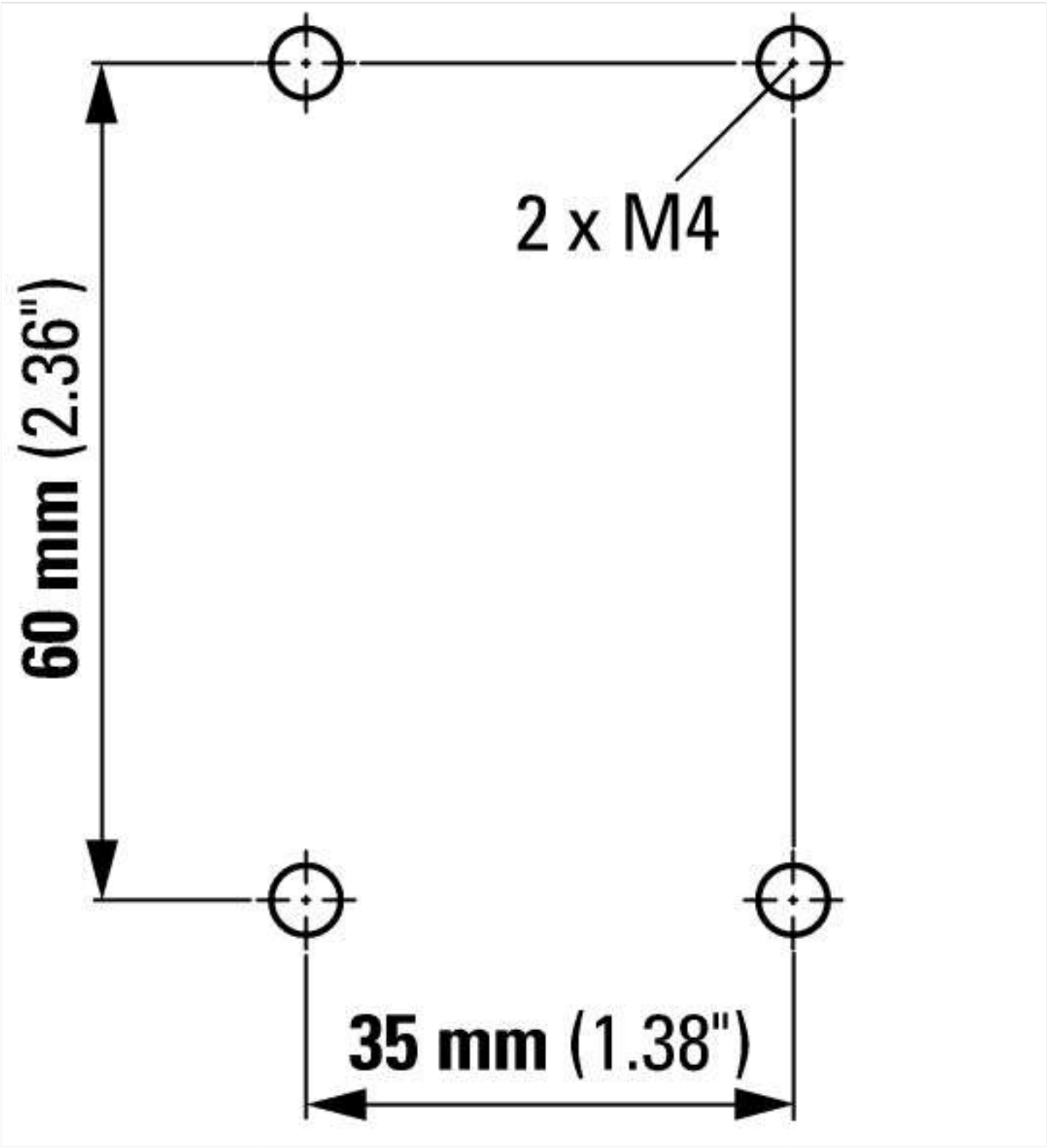

© 12/2020 by Eaton Industries GmbH