LP9P11R

Emergency Ø90mm red mushroom pull-to-release palm switch, 1NO+1NC



Product designation			Palm switches
Product type designation			LP9
General characteristics			
Colour			Grey/Yellow with red mushroom
Type of positions			Pull to release
Resistance value		KΩ	≤0.025
Material			PC-ABS for button and control station. Chrome-plasted zamak for metal operator frame
IEC degree of protection			IP65
Electrical characteristics			
Rated insulation voltage Ui IEC/EN		V	690
IEC Conventional free air thermal current Ith		A	10
Rated frequency		Hz	50
Conductivity			5V 10mA
UL/CSA and IEC/EN 60947-5-1 designation			A600 Q300
Operating current AC15			
	12V	A	6
	24V	A	6
	48V	A	6
	120V	A	6
	240V	A	3
	400V	A	1.9
	480V	A	1.5
	500V	A	1.4
	600V	A	1.2
Operating current DC13			
	12V	A	3
	24V	A	3
	48V	A	1.5
	125V	A	0.55
	250V	A	0.27
	440V	A	0.15
	500V	A	0.13
	600V	A	0.1
Mechanical features			
Operating force		kg-lb	≤2.6Nm
Mechanical life		cycles	1000000
Tightening torque for terminals max		Nm	0.5 … 0.8 Nm
Conductor section			
IEC			
	min	mm²	0.5

The characteristics described in this document are subject to updates or modifications at any time. The descriptions, technical and functional information, illustrations and instructions in this brochure are purely illustrative, and are consequently not contractually binding

		max	mm²	2.5
Operating position				
		allowable		Any

Ambient conditions

Temperature

Operating temperature			
	min	°C	-25
	max	°C	+75
Storage temperature			
	min	°C	-40
	max	°C	+85

Dimensions

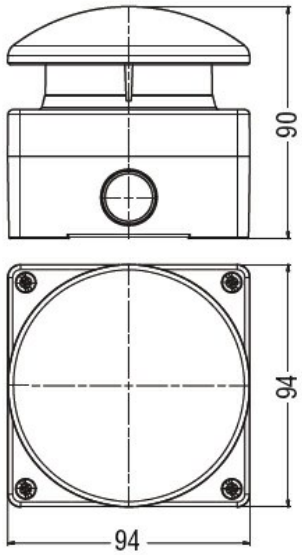

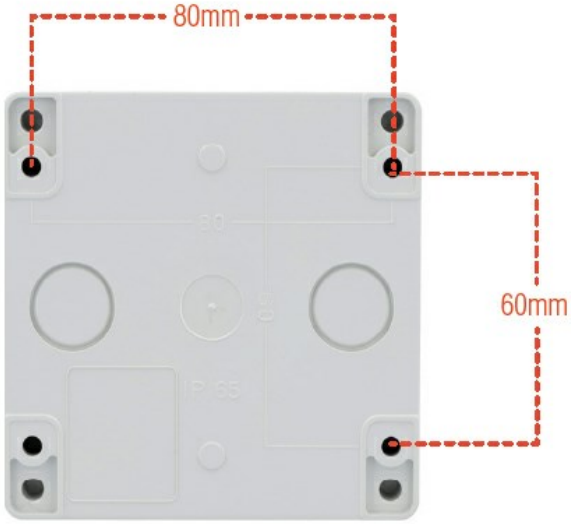

Wiring diagrams

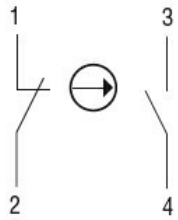

Certifications and compliance

Compliance

IEC60947-5-1

Certificates

/

ETIM classification

ETIM 8.0	EC002034 - Emergency stop complete

The characteristics described in this document are subject to updates or modifications at any time. The descriptions, technical and functional information, illustrations and instructions in this brochure are purely illustrative, and are consequently not contractually binding