AC2900

AS-Interface ProcessLine module

ProcessLine 8 SB IP69K

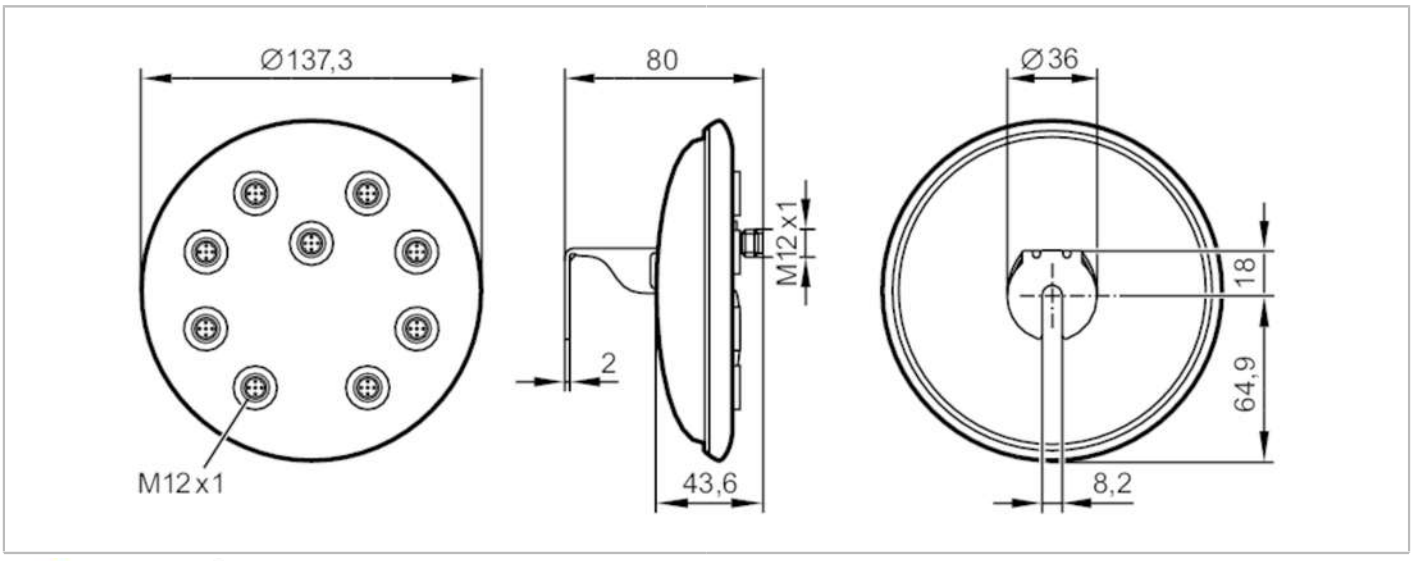

Application		
Application		hygienic and wet areas in the food industry
Electrical data		
Operating voltage	[V]	26.5...31.6 DC
Max. current load per module/slot	[A]	4; (AS-i: 4 A; AUX: 4 A)
Additional voltage supply	[V]	20...30 DC; (AUX)
Operating conditions		
Ambient temperature	[°C]	-5...70
Storage temperature	[°C]	-5...70
Max. relative air humidity	[%]	90; (non condensing)
Max. height above sea level	[m]	2000
Protection		IP 68; IP 69K
Pollution degree		2
Tests / approvals		
EMC		EN 62026-2
		EN 61000-6-2
Mechanical data		
Weight	[g]	613.5
Dimensions	[mm]	Ø 137.3 / L = 80
Materials		housing: stainless steel; O-ring: EPDM; Protective caps: PP
Sealing material		EPDM
Electrical connection		
Module connection		M12
Accessories		
Items supplied		Protective cap: M12, E70297
Accessories (optional)		Torque wrench:, E70390

AC2900

AS-Interface ProcessLine module

ProcessLine 8 SB IP69K

Remarks

Pack quantity	1 pcs.

Electrical connection - plug

Connector: 1 x M12; coding: A; Sealing: EPDM; Tightening torque: 1.2...1.4 Nm

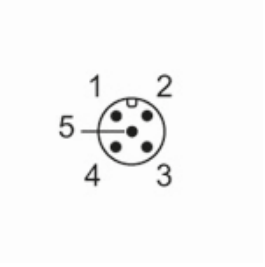

1	AS-i+
2	0 V
3	AS-i -
4	+24 V
5	FE

Electrical connection - socket

Connector: 8 x M12; coding: A; Sealing: EPDM; Tightening torque: 1.2...1.4 Nm

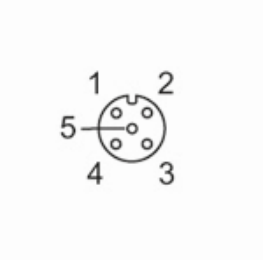

1	AS-i+
2	0 V
3	AS-i -
4	+24 V
5	FE