Product datasheet

Specifications



inductive sensor XS5 M12 - L50mm - brass - Sn2mm - 12..24VDC - M12

XS512B1NAM12

Main

Range of product	Telemecanique Inductive proximity sensors XS
Series name	General purpose
Sensor type	Inductive proximity sensor
Device application	-
Sensor name	XS5
Sensor design	Cylindrical M12
Size	50 mm
Body type	Fixed
Detector flush mounting acceptance	Flush mountable
Material	Metal
Type of output signal	Discrete
Wiring technique	3-wire
[Sn] nominal sensing distance	2 mm
Discrete output function	1 NO
Output circuit type	DC
Discrete output type	NPN
Electrical connection	4 pins M12 male connector
[Us] rated supply voltage	12...24 V DC with reverse polarity protection
Switching capacity in mA	<= 200 mA DC with overload and short-circuit protection
IP degree of protection	IP67 conforming to IEC 60529 IP69K conforming to DIN 40050

Complementary

Thread type	M12 x 1
Detection face	Frontal
Front material	PPS
Enclosure material	Nickel plated brass
Operating zone	0…1.6 mm
Differential travel	1...15% of Sr

Disclaimer: This documentation is not intended as a substitute for and is not to be used for determining suitability or reliability of these products for specific user applications

Status LED	Output state: 1 LED (yellow)
Supply voltage limits	10…36 V DC
Switching frequency	<= 5000 Hz
Maximum voltage drop	<2 V (closed)
Current consumption	<= 10 mA no-load
Maximum delay first up	10 ms
Maximum delay response	0.1 ms
Maximum delay recovery	0.1 ms
Marking	CE
Threaded length	30 mm
Length	50 mm
Net weight	0.035 kg

Environment

Product certifications	UL CSA
Ambient air temperature for operation	-25…70 °C
Ambient air temperature for storage	-40…85 °C
Vibration resistance	25 gn amplitude = +/- 2 mm (f = 10…55 Hz) conforming to IEC 60068-2-6
Shock resistance	50 gn for 11 ms conforming to IEC 60068-2-27

Packing Units

Unit Type of Package 1	PCE
Number of Units in Package 1	1
Package 1 Weight	27.0 g
Package 1 Height	4.2 cm
Package 1 width	9.7 cm
Package 1 Length	6.6 cm
Unit Type of Package 2	S02
Number of Units in Package 2	44
Package 2 Weight	1.497 kg
Package 2 Height	15 cm
Package 2 width	30 cm
Package 2 Length	40 cm
Package 3 Height	15 cm

Offer Sustainability

Sustainable offer status	Green Premium product
REACh Regulation	REACh Declaration
EU RoHS Directive	Pro-active compliance (Product out of EU RoHS legal scope) EU RoHS Declaration
Mercury free	Yes
RoHS exemption information	Yes

Environmental Disclosure	Product Environmental Profile
Circularity Profile	End of Life Information

Contractual warranty

Warranty	18 months

Dimensions

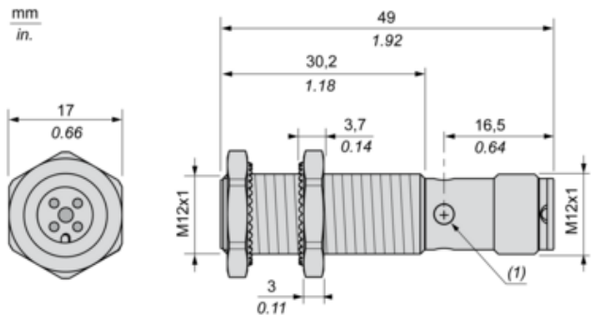

(1) : LED

Minimum Mounting Distances

Side by side

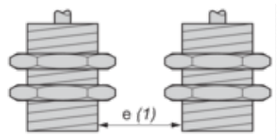

e (1) ≥ 4 mm/0.16 in.

Face to face

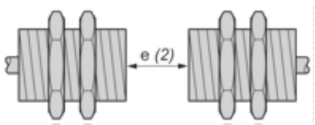

e (2) ≥ 24 mm/0.94 in.

Facing a metal object

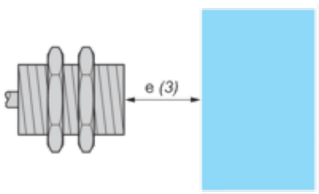

e (3) ≥ 6 mm/0.24 in.

Wiring Schemes

M12 connector



NPN

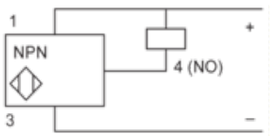

1 : (+)

2 : Not connected

3 : (-)

4 : NO Output

Performance Curves

Standard Steel Target : 12x12x1 mm

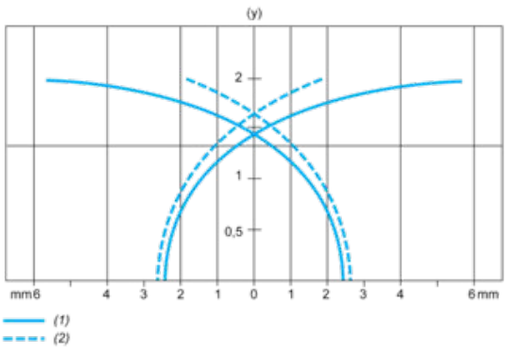

(1) Pick-up points

(2) Drop-out points (object approaching from the side)

(y) Sensing distance in mm