8EI2X2HCSS0.XXXX-1

1 Order data

Order number	Short description	Figure
	1-axis modules SafeMOTION	
8EI2X2HCSS0.XXXX-1	ACOPOS P3 servo drive, 3x 200-480 VAC, 2.2 A, SafeMOTION EnDat 2.2, 1 axis, AS, cold plate or pass-through mounting	
	Optional accessories	
	Display modules	
8EAD0000.000-1	Display module, LCD, 128 x 64, black/white, 1x USB 3.0	
	Front covers	
8EXA100.0010-00	ACOPOS P3 cover, B&R orange, single-width, height 1	
8EXA100.0020-00	ACOPOS P3 cover, B&R dark gray, single-width, height 1	
	Passive line filter	
8B0F0160H000.A00-1	Passive line filter, 16 A, 3x 480 VAC, 50/60 Hz, IP20	
8B0F0300H000.000-1	Passive line filter, 30 A, 3x 520 VAC, 50/60 Hz, IP20	
8B0F0550H000.000-1	Passive line filter, 55 A, 3x 520 VAC, 50/60 Hz, IP20	
	Plug-in modules	
8EAC0122.001-1	ACOPOS P3 plug-in module, resolver interface 10 kHz	
8EAC0130.000-1	ACOPOS P3 plug-in module, 8 digital I/O 24 V (4x 400 mA, 4x 100 mA) individually configurable as inputs or outputs, 2 digital I/O 24 V 2 A configurable in pairs as inputs or outputs, order terminal block 8TB0230.221A-00 separately!	
8EAC0150.001-1	ACOPOS P3 plug-in module, digital multi-encoder interface	
8EAC0151.001-1	ACOPOS P3 plug-in module, incremental encoder interface	
8EAC0152.001-1	ACOPOS P3 plug-in module, analog multi-encoder interface	
	Shield component sets	
8SCSE01.0100-00	ACOPOS P3 shield component set: 1x ACOPOS P3 shield mounting plate, 1x 2x M3x6 screws	
8SCSE02.0100-00	ACOPOS P3 shield component set: 1x shield component set, type SK14	
8SCSE02.0200-00	ACOPOS P3 shield component set: 1x shield component set, type SK20	
	Terminals	
8TB2104.2210-00	Push-in terminal block 4-pin, 1-row, pitch: 5.08 mm, label 1: numbered consecutively	
8TB3102.222C-20	Push-in terminal block, 2-pin, single row, with locking mechanism, spacing: 7.62 mm, label 2: COM 24 V, C keying: 10	
8TB3103.222A-20	Push-in terminal block, 3-pin, 1-row, spacing: 7.62 mm, label 2: PE RB- RB+, A keying: 000	
8TB3106.222B-20	Push-in terminal block, 6-pin, single row, with locking mechanism, spacing: 7.62 mm, label 2: PE L3 L2 L1 DC- DC+, B keying: 000001	
8TB3202.222C-40	Push-in terminal block, 2-pin, 2-row, with locking mechanism, spacing: 7.62 mm, label 2: COM 24 V, C keying: 10	
8TB3206.222B-40	Push-in terminal block, 6-pin, 2-row, with locking mechanism, spacing: 7.62 mm, label 2: PE L3 L2 L1 DC- DC+, C keying: 000001	
8TB3308.222A-00	4+4-pin push-in terminal block 1-row / 2-row, pitch: 7.62 mm, label 2: T- B- T+ B+ PE W V U coding A: 0000	

Table 1: 8EI2X2HCSS0.XXXX-1 - Order data

2 Technical data

Order number	8EI2X2HCSS0.XXXX-1
General information	
Slots for plug-in modules	1
Certifications	
CE	In preparation
UL	In preparation
EAC	Yes
KC	In preparation
Mains connection	
Network configurations	TN-S, TN-C-S with grounded neutral
Mains input voltage	3x 200 VAC to 480 VAC ±10%
Frequency	50 / 60 Hz ±4%
Installed load	Max. 2.5 kVA

Table 2: 8EI2X2HCSS0.XXXX-1 - Technical data

Order number	8EI2X2HCSS0.XXXX-1
Inrush current	Max. 45 A
Switch-on interval	Typ. 60 s
Integrated line filter per EN 61800-3, category C3	No [1]
Terminal connection cross section	
Flexible and fine-stranded wires	
With wire end sleeves	0.25 to 4 mm²
Approbation data	
UL/C-UL-US	24 to 8 AWG
CSA	24 to 8 AWG
Power dissipation at device nominal power without braking resistor	[(40 + 6.9 * P_{AVG} [kW] + 7.5 * I_{AX1} [A] + 0.25 * I_{BR1}^2 [A] + P_{VSLOT}) * 1.1] [W] [2]
Max. line length	3 m [3]
DC bus connection	
Continuous power [4]	1 kW [5]
Reduction of continuous power depending on mains input voltage	
Mains input voltage <3x 400 VAC	1 kW * (Mains input voltage [V] / 400 V)
DC bus capacitance	470 µF
Terminal connection cross sections	
Flexible and fine-stranded wires	
With wire end sleeves	0.25 to 4 mm²
Approbation data	
UL/C-UL-US	24 to 8 AWG
CSA	24 to 8 AWG
Max. line length	3 m [6]
24 VDC power supply	
Input voltage	24 VDC ±25%
Input capacitance	4310 µF
Current consumption	0.9 A + Current for motor holding brake [7]
Terminal connection cross sections	
Flexible and fine-stranded wires	
With wire end sleeves	0.25 to 4 mm²
Approbation data	
UL/C-UL-US	24 to 8 AWG
CSA	24 to 8 AWG
Max. line length	30 m
Motor connection	
Quantity	1
Continuous power per motor connection [8]	1 kW
Continuous current per motor connection [8]	2.2 A_{eff}
Reduction of continuous current depending on switching frequency and mounting type	
Switching frequency 5 kHz	
Cold plate mounting	In preparation
Feed-through mounting	In preparation
Switching frequency 10 kHz	
Cold plate mounting	In preparation
Feed-through mounting	In preparation
Switching frequency 20 kHz	
Cold plate mounting	In preparation
Feed-through mounting	In preparation
Reduction of continuous current depending on installation elevation	
Starting at 500 m above sea level	0.22 A_{eff} per 1000 m
Peak current per motor connection	6 A_{eff}
Peak power output	2.5 kW
Nominal switching frequency	5 kHz
Possible switching frequencies [9]	5 / 10 / 20 kHz
Insulation stress of the connected motor per IEC TS 60034-25:2004	Limit value curve A
Protective measures	
Overload protection	Yes
Short circuit and ground fault protection	Yes
Max. output frequency	598 Hz [10]
Variant	
U, V, W, PE	Connector
Shield connection	Yes
Terminal connection cross section	
Flexible and fine-stranded wires	
With wire end sleeves	1.5 to 6 mm²
Approbation data	
UL/C-UL-US	24 to 8 AWG
CSA	24 to 8 AWG

Table 2: 8EI2X2HCSS0.XXXX-1 - Technical data

Order number	8EI2X2HCSS0.XXXX-1
Max. motor cable length depending on switching frequency	
Switching frequency 5 kHz	75 m [11]
Switching frequency 10 kHz	38 m [11]
Switching frequency 20 kHz	19 m [11]
Motor holding brake connection	
Quantity	1
Output voltage [12]	Depends on the input voltage on connector X2
Continuous current	1.3 A
Max. internal resistance	0.25 Ω
Extinction potential	Approx. 30 V
Max. extinction energy per switching operation	1.5 Ws
Max. switching frequency	0.5 Hz
Protective measures	
Overload and short-circuit protection	Yes
Open circuit monitoring	Yes
Undervoltage monitoring	Yes
Response threshold for open circuit monitoring	Approx. 30 mA
Response threshold for undervoltage monitoring	Approx. 23 V
Max. line length	75 m [13]
Braking resistor [14]	
Peak power output	25 kW
Continuous power	2 kW
Minimum braking resistance (ext.)	25 Ω
Terminal connection cross section	
Flexible and fine-stranded wires	
With wire end sleeves	0.25 to 4 mm²
Approbation data	
UL/C-UL-US	24 to 8 AWG
CSA	24 to 8 AWG
Protective measures	
Overload protection	No
Short circuit and ground fault protection	Short-circuit protection: Yes Ground fault protection: No
Max. line length	3 m
Fieldbus	
Type	POWERLINK V2 controlled node (CN)
Variant	2x RJ45, shielded, 2-port hub
Line length	Max. 100 m between 2 stations (segment length)
Transfer rate	100 Mbit/s
Encoder interfaces	
Quantity	1
Type	Digital multi-encoder interface, configurable [15]
Connections	8-pin female Mini I/O connector
Status indicators	None [16]
Electrical isolation	
Encoder - ACOPOS P3	No
Max. encoder cable length	75 m Depends on the cross section of the power supply wires in the encoder cable [17]
Encoder power supply	
Output voltage	Configurable Typ. 11.45 V ±0.1 V / 5.2 V ±0.1 V [18][19]
Load capacity	Max. 300 mA
Protective measures	
Short-circuit proof	Yes
Overload-proof	Yes
Synchronous serial interface	
Signal transmission	RS485 [20]
Data transfer rate	Depends on the configured encoder type
Differential voltage [21]	
Minimum	2.0 V
Maximum	6.0 V
Max. power consumption per encoder interface	$P_{ENCODER}$ [W] = U_{24V} [V] * ($I_{ENCODER}$ [A] * 0.7) + 0.5 W [22]
Trigger inputs	
Quantity	2
Circuit	Sink
Electrical isolation	
Input - ACOPOS P3	Yes
Input - Input	Yes
Input voltage	
Nominal	24 VDC
Maximum	30 VDC

Table 2: 8EI2X2HCSS0.XXXX-1 - Technical data

Order number	8EI2X2HCSS0.XXXX-1
Switching threshold	
Low	<5 V
High	>15 V
Input current at nominal voltage	7 mA
Switching delay	
Rising edge	<51 µs
Falling edge	<52 µs
Modulation compared to ground potential	Max. ±38 V
Terminal connection cross section	
Flexible and fine-stranded wires	
With wire end sleeves	0.25 to 2.5 mm²
Approbation data	
UL/C-UL-US	26 to 12 AWG
CSA	26 to 12 AWG
Max. line length	100 m
Support	
Motion system	
mapp Motion	5.00.0 and higher
ACP10/ARNC0	3.16.1 and higher
Electrical properties	
Energy efficiency (IE classification) [23]	
Efficiency data	IE2 (10,25) 3% IE2 (50,25) 3% IE2 (10,50) 3.1% IE2 (50,50) 3.2% IE2 (90,50) 3.3% IE2 (10,100) 3.5 % IE2 (50,100) 3.6% IE2 (90,100) 4 %
Nominal losses in standby mode	12.2 W
Operating conditions	
Permissible mounting orientations	
Hanging vertically	Yes
Horizontal, face up	No
Standing horizontally	No
Installation elevation above sea level	
Nominal	0 to 500 m
Maximum	4000 m
Pollution degree per EN 61800-5-1	2 (non-conductive pollution)
Overvoltage category per EN 61800-5-1	III
Degree of protection per EN 60529	IP20 [24]
Ambient conditions	
Temperature	
Operation	
Nominal	5 to 40°C
Maximum	55°C
Storage	-25 to 55°C
Transport	-25 to 70°C
Relative humidity	
Operation	5 to 85 %, non-condensing
Storage	5 to 95%
Transport	95% at 40°C
Mechanical properties	
Dimensions [25]	
Width	66 mm
Height	290 mm
Depth	
Cold plate	281.5 mm (with 8EXA front cover: 284 mm)
Feed-through mounting	277.5 mm (with 8EXA front cover: 280 mm)
Weight	3.8 kg

Table 2: 8EI2X2HCSS0.XXXX-1 - Technical data

1) A line filter must be connected.
   CE compliance can only be ensured by connecting a B&R line filter (8x0F...).
   In extreme cases, using line filters from 3rd-party manufacturers can result in irreparable damage to the ACOPOS P3 8EI servo drive.
2) P_{AVG} ... Average continuous power of the module
   I_{AX1} ... RMS value of the current on axis 1
   I_{BR1} ... Nominal current of the motor holding brake for axis 1
   P_{VSLOT} ... Power dissipation of the 8EAC plug-in module
3) Maximum line length between line filter and mains connection on the module.
4) Valid for mains input voltage ≥3x 400 VAC.
   The sum of the continuous power values on all motor connections and the power of the DC bus connector is not permitted to exceed this value.
5) The value can be higher under certain conditions.
6) This value applies to unshielded wiring inside a control cabinet.
   Maximum length of the DC bus wiring inside a control cabinet.

7) Current consumption depends on the respective configuration of the ACOPOS P3 8EI servo drive.
The inrush current of the 24 VDC power supply is not limited by the module.
8) Valid under the following conditions: 560 VDC DC bus voltage, 5 kHz switching frequency, 40°C ambient temperature, installation elevation <500 m above sea level, no derating due to cooling type.
9) B&R recommends operating the module at its nominal switching frequency. Operating the module at a higher switching frequency for application-specific reasons reduces the continuous current and increases CPU utilization.
10) The module's electrical output frequency (SCTRL_SPEED_ACT * MOTOR_POLEPAIRS) is monitored to protect against dual use in accordance with Regulation (EC) 428/2009 | 3A225. If the electrical output frequency of the module exceeds the limit value of 598 Hz uninterrupted for more than 0.5 s, then the current movement is aborted and error 6060 is output ("Power unit: Limit speed exceeded").
11) The sum of the cable lengths of all motor cables connected to this module is not permitted to exceed this value.
12) During configuration, it is necessary to check if the minimum voltage can be maintained on the holding brake with the specified input voltage and wiring. For the operating voltage range of the holding brake, see the user documentation for the motor being used.
13) During configuration, it is necessary to check if the minimum voltage can be maintained on the holding brake with the intended line length. For the permissible operating voltage range of the holding brake, see the user documentation for the motor being used.
14) This values apply to an external braking resistor. This module is not equipped with an internal braking resistor.
15) The encoder type is not predefined from the factory. The encoder type necessary in each case must be configured in Automation Studio.
16) The direction of rotation of the encoder can be displayed on the 8EAD0000.000-1 display module.
17) Maximum encoder cable length l_{max} can be calculated as follows (the maximum permissible encoder cable length of 75 m is not permitted to exceeded):

$l_{max} = f / I_G * A * 1/(2*\rho)$

f ... (Output voltage of encoder interface [V] - Min. permissible supply voltage of connected encoder [V]) * 1.1
I_G ... Max. current consumption of the connected encoder [A].
A ... Cross section of the power supply wires [mm²]
ρ ... Specific resistance [Ω mm²/m] (e.g. for copper: ρ = 0.0178)
18) The output voltage is not predefined from the factory (with the exception of encoder types EnDat 2.2 and HIPERFACE DSL). It must be configured in Automation Studio based on the encoder type. If no output voltage is configured, then the encoder will not be supplied by digital multi-encoder interface X4x. Power to the encoder can then be supplied externally.
19) Output voltage 5.2 V is only available under the following conditions:
- 8EI servo drive with 8ZECxxx revision D0 and higher - see the device information on the left side cover of the 8EI servo drive
- ACOPOS operating system 3.15.0 and higher (for 8EIxxxxxD... 2-axis modules and 8EIxxxxxT... 3-axis modules)
- ACOPOS operating system 3.17.0 and higher (for 8EIxxxxxS... 1-axis modules)
20) Except encoder type HIPERFACE DSL.
21) Values valid for clock output and data input. Except encoder type HIPERFACE DSL.
22) $I_{ENCODER}$ ... Current consumption of the encoder
U_{24V} ... Input voltage on the +24 VDC input of the module
23) The IE classification of the module is based on drive losses. This includes components such as EMC filters, etc. The efficiency data was determined at a switching frequency of 5 kHz (factory setting). Classification is performed at 90% of the frequency and at 100% of the current. When operating the module in connection with an induction motor, the module is only permitted to be operated with a switching frequency of 5 kHz.
24) The specified degree of protection is only met if either the slot cover is installed on the module or an 8EAC plug-in module is installed and suitable terminals are connected to all connectors and all fans are installed.
25) These dimensions refer to the actual device dimensions including the respective mounting plate. Additional spacing above and below the devices must be taken into account for mounting, connections and air circulation.

3 Status indicators

3.1 SafeMOTION 1-axis modules



Figure 1: 8EI SafeMOTION servo drives - Status indicators

3.2 LED state during startup

The following intervals are used for the LED status indicators:

Width of box: 50 ms
Repeats after: 3,000 ms

Status	Ax1/Ax2/Ax3	Display
1. Boot procedure for base hardware active	Green	
	Orange	
	Red	
2. Waiting for network telegram	Green	
	Orange	
	Red	
3. Network communication active	Green	
	Orange	
	Red	
4. ACOPOS operating system being transferred/burned	Green	
	Orange	
	Red	
	Ax1/Ax2/Ax3 **PLK**	

Table 3: LED state during startup

Status	Ax1/Ax2/Ax3	Display
5. Module booting	Green	
	Orange	
	Red	
6. Module ready for operation	Green	
	Orange	
	Red	

Table 3: LED state during startup

3.3 POWERLINK - LED status indicators

Label	Color	Description	
PLK	Green	Blinking green (1x)	The client detects a valid POWERLINK frame on the network.
		Blinking green (2x)	Cyclic operation on the network, but the client itself is not yet in cyclic operation.
		Blinking green (3x)	Cyclic operation of the client is in preparation.
		Solid green	The client is in cyclic operation.
		Flickering green	The client is not in cyclic operation and also does not detect any other stations on the network in cyclic operation.
	Red	Solid red	The POWERLINK node number of the module is 0.
		Blinking red/green	The client is in an error state (drops out of cyclic operation).
	Orange	Solid orange	Module booting

Table 4: POWERLINK - LED status indicators

3.4 Ax1/Ax2/Ax3 - LED status indicators

Label	Color	Function	Description	
Ax1 Ax2 Ax3	Green	Ready	Solid green	The module is ready for operation and the power stage can be enabled (operating system present and booted, no pending permanent or temporary errors).
			Blinking green	The module is not ready for operation. **Examples:** • No signal on one or both enable inputs • DC bus voltage outside the tolerance range • Overtemperature on the motor (temperature sensor) • Motor feedback not connected or defective • Motor temperature sensor not connected or defective • Overtemperature on the module (IGBT junction, heat sink, etc.) • Disturbance on network
	Red	Error	Solid red	There is a permanent error on the module. **Examples:** • Permanent overcurrent • Invalid data in EPROM
			Blinking red	Burning ACOPOS P3 operating system
	Orange	Run	Solid orange	The module's power stage is enabled.
	---	---	LED off	No voltage being supplied to module

Table 5: Ax1/Ax2/Ax3 - LED status indicators

3.5 R/E and SE - LED status indicators

LED	Color		Description
R/E	Green	Red	
	Off	Off	Module not supplied with power, no communication
	Single flash		Mode "Unlink"
	Double flash		Updating firmware
	Blinking		Mode PREOPERATIONAL
	On		Mode RUN
	On	Single flash, inverse	Safety-related firmware invalid
		Triple flash, inverse	Updating safety-related firmware
		On	Communication error
	Off	On	Error
SE	Red	Off	Mode RUN
		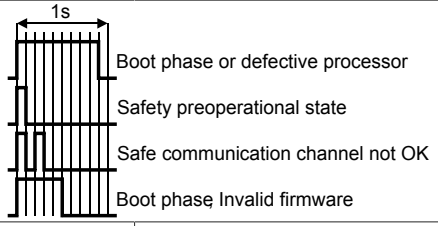	
		On	Non-acknowledgeable error state, FAIL SAFE state
	The two "SE" indicators are two separate LEDs that show the states of safety processor 1 and safety processor 2. This is only distinguishable when the front cover is open, however.		

Table 6: R/E and SE - LED status indicators

4 Installation

4.1 1-axis cold plate

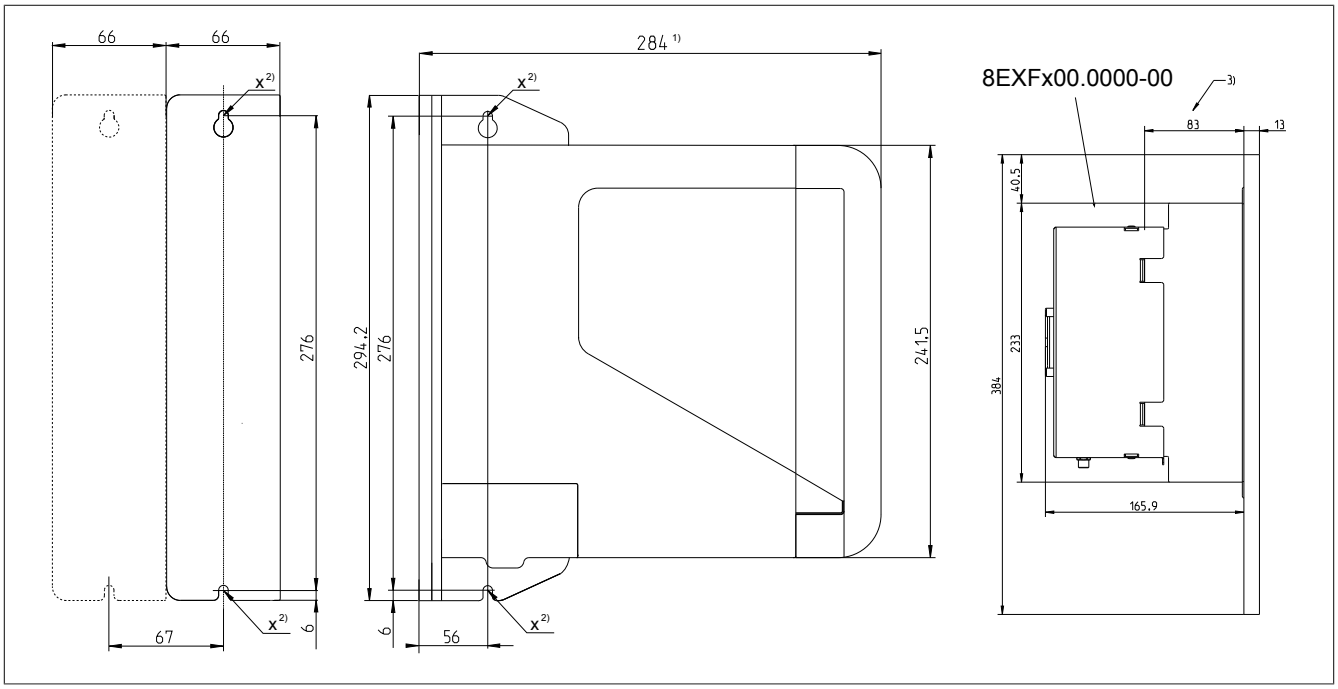

Figure 2: 1-axis module cold plate up to 4 kW - Dimension diagram

1) Without front cover: 281.5 mm
2) Hole for M5 screws.
3) Fin depth of the feed-through heat sink without installed fan 8EXFx00.0000-00

Cold plate mounting	Feed-through mounting
Permissible mounting orientations 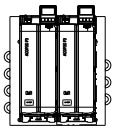 Hanging vertically	**Permissible mounting orientations**  Hanging vertically
Impermissible mounting orientations 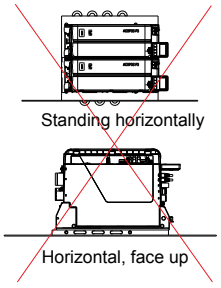 Standing horizontally Horizontal, face up	**Impermissible mounting orientations** 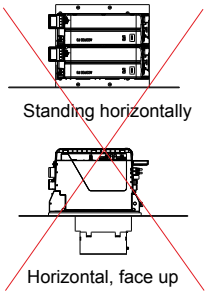 Standing horizontally Horizontal, face up

Table 7: Permissible and impermissible mounting orientations

Information:

When mounting ACOPOS P3 modules for cold-plate or feed-through mounting, be sure not to scratch the backplane. This can impair thermal dissipation to the mounting plate.

4.2 Installation dimensions

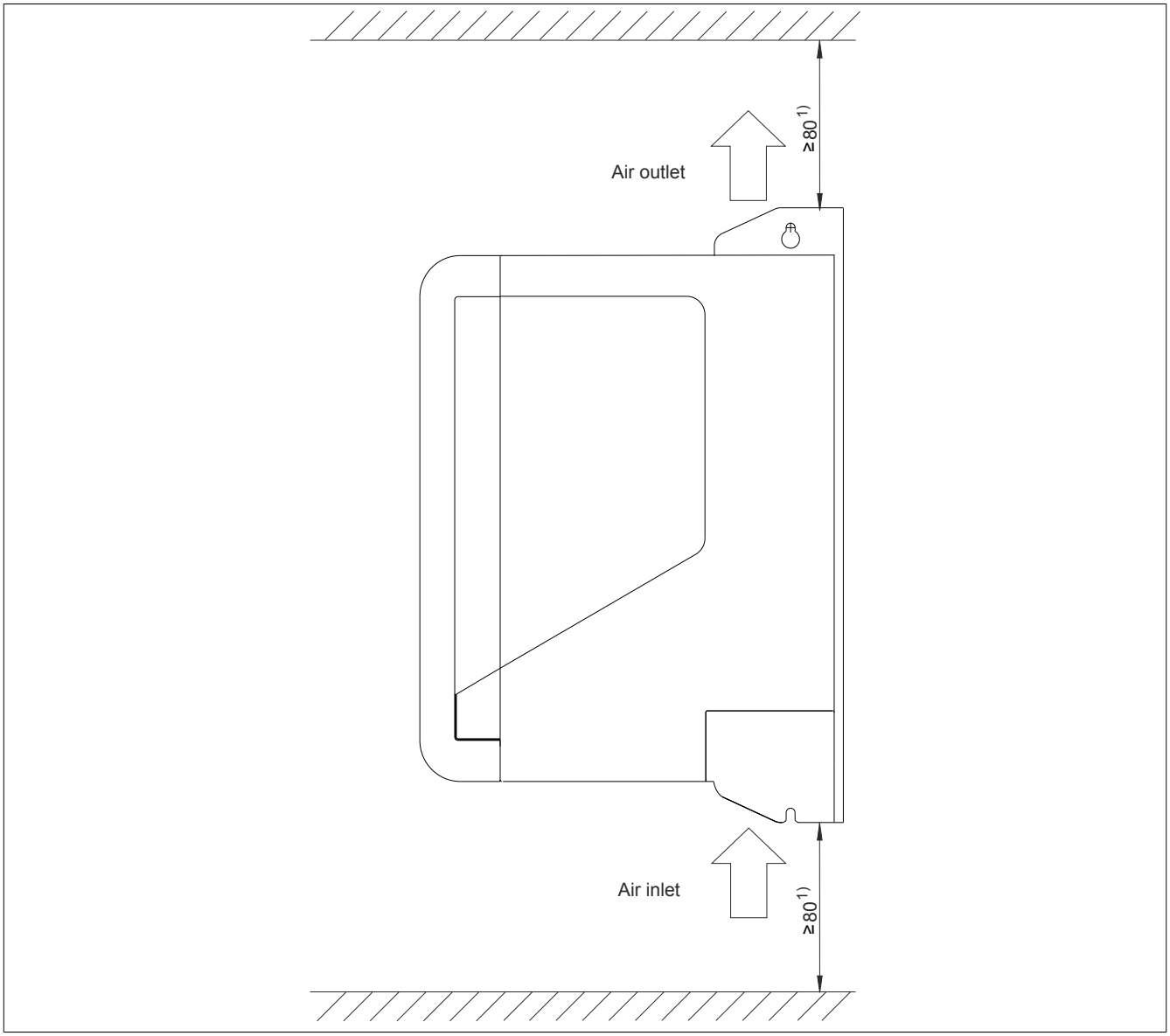

Figure 3: ACOPOS P3 8EI servo drives - Installation dimensions

1) For sufficient air circulation, a clearance of at least 80 mm must be provided above and below the module.
In order to connect display module 8EAD0000.000-1 to the module without problems, at least 100 mm clearance is necessary above the module.
In order to ensure easy wiring (taking all minimum bend radii into account), at least 200 mm clearance is necessary below the module.

Caution!

Cooling air exiting the 8EI servo drive can have a temperature up to 90°C. Any components installed near the air outlet must be designed to withstand these high temperatures!

5 Wiring

5.1 Pinout overview

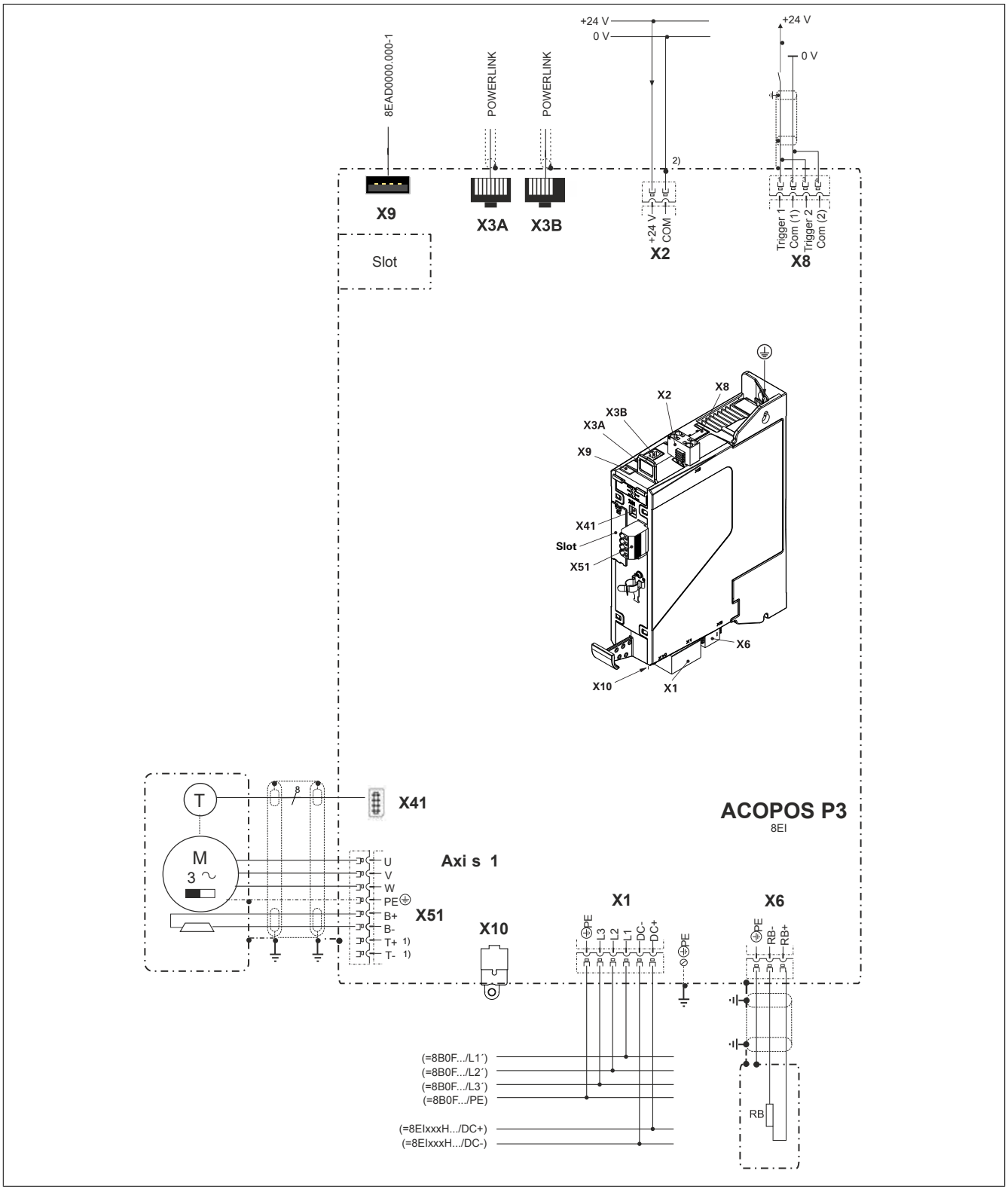

Figure 4: Mains input voltage - 3x 200 to 480 VAC

1) A temperature sensor does not need to be connected when using 8ECHxxx hybrid motor cables since the motor temperature is transferred digitally.
2) The COM connection on connector X2 must be grounded to achieve a defined relationship between the signal ground and ground potential!

5.2 Connector X1 - Pinout

X1	Name	Function
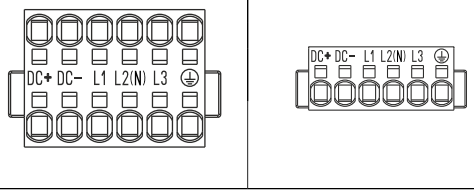	DC+	DC bus connection DC+
	DC-	DC bus connection DC-
	L1	Mains connection L1
	L2(N)	Mains connection L2(N)
	L3	Mains connection L3
	PE	Protective ground conductor

Table 8: Connector X1 - Pinout

Warning!

Only DC bus circuits of 8EI servo drives with the same supply voltage range are permitted to be connected.

5.2.1 Mains connection

3x 200 - 480 VAC

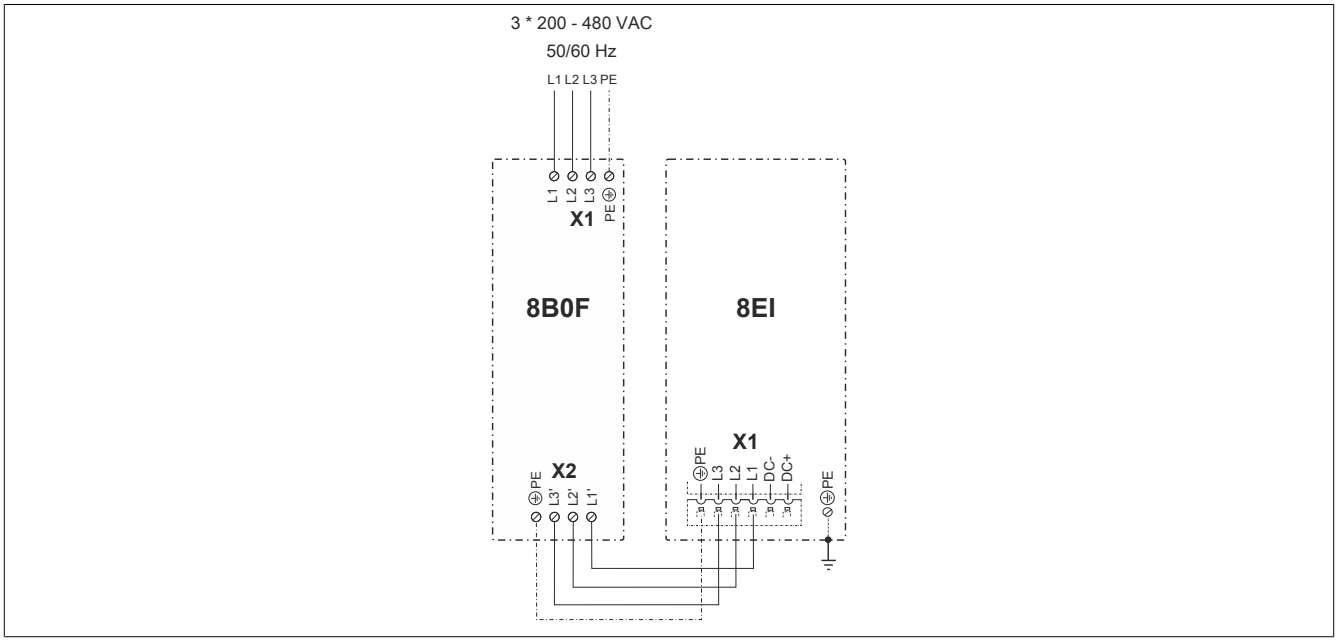

Figure 5: Mains connection 3x 200 - 480 VAC

5.3 Connector X2 - Pinout

X2	Name	Function
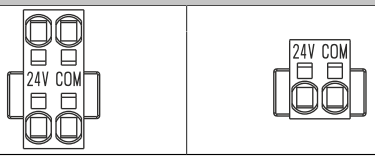	COM	0 V power supply
	24 V	+24 V power supply

Table 9: Connector X2 - Pinout

5.4 Connectors X3A, X3B - Pinout

X3A, X3B	Pin	Name	Function
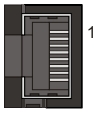	1	RXD	Receive signal
	2	RXD\	Receive signal inverted
	3	TXD	Transmit signal
	4	Shield	Shield
	5	Shield	Shield
	6	TXD\	Transmit signal inverted
	7	Shield	Shield
	8	Shield	Shield

Table 10: X3A, X3B connectors - Pinout

5.5 SafeMOTION connector X4x - Pinout

X4x	Pin	Description	Function depending on configured encoder type			
			EnDat SafeMOTION	EnDat 2.2	SSI	BiSS
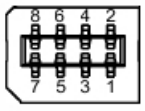	1	U+	Encoder power supply +			
	2	T	Clock output			
	3	---	---		Sense input +5 V [1]	
	4	T\	Clock output inverted			
	5	---	---		Sense input 0 V [1]	
	6	D	Data			
	7	COM	Encoder power supply 0 V			
	8	D\	Data inverted			

Table 11: Connector X4x - Pinout

1) Only if the encoder supply voltage (5 V) is configured accordingly.

5.6 Connector X5x - Pinout

X5x	Name	Function
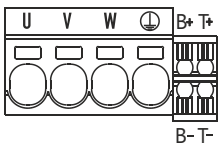	B+	Brake +
	B-	Brake -
	T+	Temperature sensor + [1]
	T-	Temperature sensor - [1]
	PE	Protective ground conductor
	U	Motor connection U
	V	Motor connection V
	W	Motor connection W

Table 12: Connector X5x - Pinout

1) A temperature sensor does not need to be connected when using a hybrid motor cable solution since the motor temperature is transferred digitally.

Danger!

The connections for the motor temperature sensors and the motor holding brake are safely isolated circuits. As a result, only devices or components that have at least safe isolation per IEC 60364-4-41 or EN 61800-5-1 are permitted to be connected to these connections.

Information:

B&R recommends wiring the ACOPOS P3 X5x motor connectors in the following order:

1. **X51**
2. **X52**
3. **X53**

5.7 Connector X6 - Pinout

X6	Name	Function
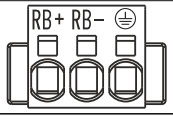	PE	Protective ground conductor
	RB-	Braking resistor -
	RB+	Braking resistor +

Table 13: Connector X6 - Pinout

Danger!

During operation, the contacts of connector X6 carry dangerous voltages greater than 60 VDC. Touching one of these contacts can result in a life-threatening electric shock. This could result in death or severe injury.

For this reason, terminal block 8TB3103.222A-20 or 8TB4103.222A-10 must always be connected to connector X6 during operation.

5.8 Connector X8 - Pinout

X8	Pin	Name	Function
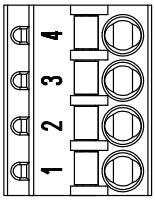	1	Trigger 1	Trigger 1
	2	COM (1)	Trigger 1 0 V
	3	Trigger 2	Trigger 2
	4	COM (2)	Trigger 2 0 V

Table 14: Connector X8 - Pinout

5.9 Connector X10 - Pinout

In preparation

6 Setting POWERLINK node numbers

ACOPOS P3 8EI servo drives do not have node number switches and are delivered with the node number set to 0.

There are 2 ways to set the node number:

- Setting with dynamic node allocation (DNA) in Automation Studio
- Setting with the 8EAD0000.000-1 display module

Information:

If an ACOPOS P3 8EI servo drive is supplied with 24 VDC and its node number is set to 0, then LED "PLK" is lit solid red.

Information:

Node numbers in the range 001 to 239 are permitted.

Node number 000 and in the range 240 to 255 are reserved and not permitted.

Information:

A node number set using the 8EAD0000.000-1 display module is only applied the next time the 24 VDC power supply of the ACOPOS P3 8E1 servo drive is switched back on.

Setting with dynamic node allocation (DNA)

Information:

The node number of the first ACOPOS P3 8EI servo drive in an ACOPOS P3 drive system can only be set using DNA if it is connected via POWERLINK directly to the controller or another POWERLINK-capable module (in DNA mode) that can switch hub ports (e.g. X20BC...).

If this is not the case, the node number of the first ACOPOS P3 8EI servo drive in an ACOPOS P3 drive system can only be set using the 8EAD000.0000-00 display module.

Information:

Setting the node number using DNA only works on ACOPOS P3 8EI servo drives with node number 0 (factory setting).

See also section "Dynamic node allocation (DNA)" in Automation Help.

Setting with the 8EAD0000.000-1 display module

See "Accessories / Display module 8EAD0000.000-1" in the ACOPOS P3 user's manual.