Y-bearing plummer block units

SYWK 40 YTH

Material	Composite for food and b everage

Dimensions

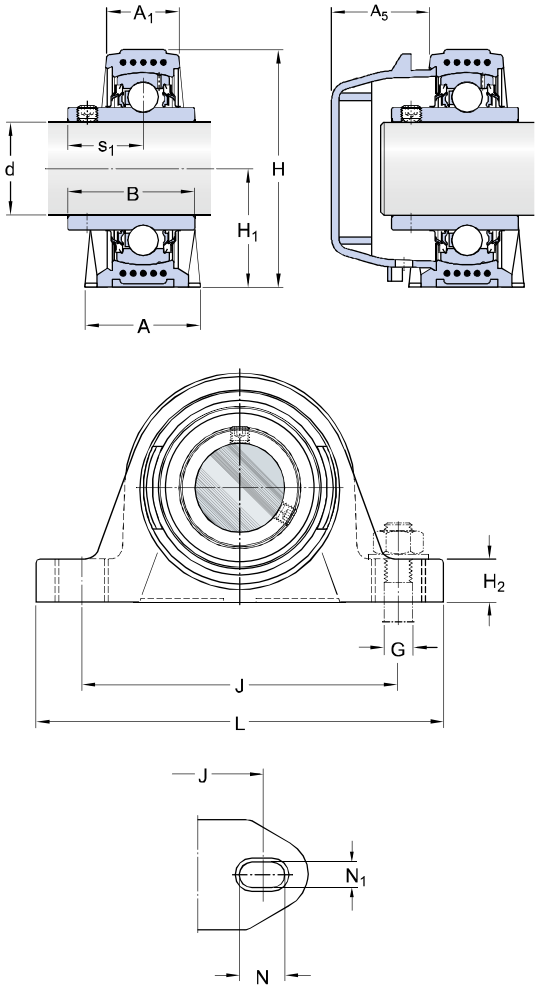

d		40	mm
A		48	mm
A_1		30	mm
A_5		33.5	mm
B		49.2	mm
H		99	mm
H_1		49.2	mm
H_2		19	mm
J		136	mm
J	max.	143	mm
J	min.	129	mm
L		176	mm
N		21.5	mm
N_1		14.5	mm
s_1		30.2	mm

Calculation data

Basic dynamic load rating	C	26	kN
Basic static load rating	C_0	19	kN
Fatigue load limit	P_u	0.8	kN
Limiting speed		2800	r/min
(with shaft tolerance h6)			

Mass

Mass bearing unit		0.91	kg

Mountin in ormation

Hexagonal key si e for grub screw	N	4	mm
ecommended tightening tor ue for grub screw		6.5	N m
ecommended diameter for attachment bolts mm		12	mm
ecommended diameter for attachment bolts inch		0.5	in

ertainin roducts

Housing	508
Bearing	A 208 2 F/H

ro riate roducts

nd cover	C 208