Brand of NTN corporation

# Technical data

## 22210EAW33ZZC3

Spherical roller bearings

[KIZEI] ULTAGE



## VISUAL (S)

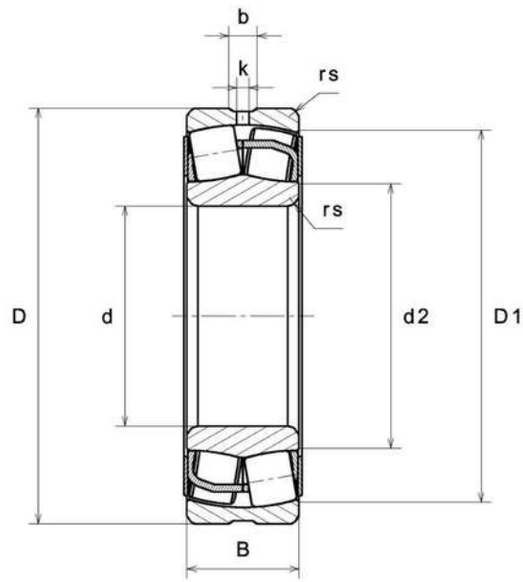


**NTN Europe**
1 rue des Usines · BP 2017 · 74010 Annecy Cedex · France · Tel. +33 (0)4 50 65 30 00
S.A. au capital de 322 639 919 € · RCS ANNECY B 325 821 072 · Id. Fiscale : FR 48 325 821 072
SIRET 325 821 072 00015 · Code APE 2815 Z · Code NACE 28.15

# 22210EAW33ZZC3
Spherical roller bearings

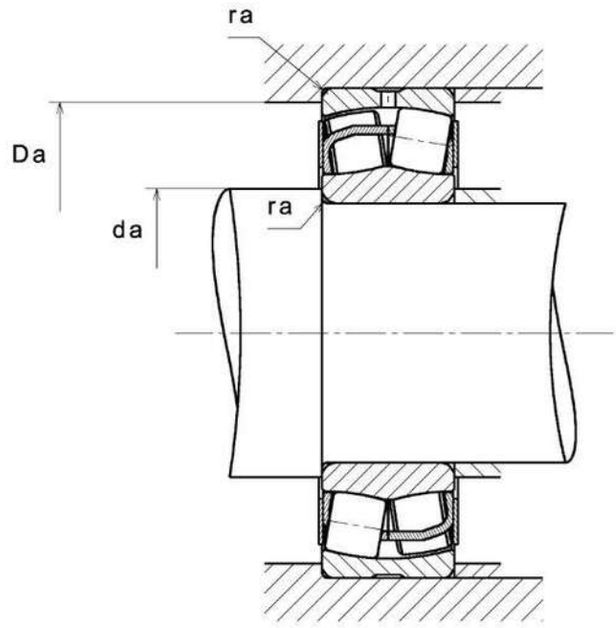


## PRODUCT DEFINITION

| | |
|---|---|
| **Brand** | SNR |
| **d - Internal diameter** | 50 mm |
| **D - External diameter** | 90 mm |
| **B - Bearing/Inner ring width** | 23 mm |
| **d2 - External diameter inner ring** | 59,5 mm |
| **D1 - Inner diameter outer ring** | 80,7 mm |
| **rs - Min fillet radius** | 1,1 mm |
| **Number of lubrication holes** | 3 |
| **b - Groove width** | 5,83 mm |
| **k - Hole diameter** | 2,5 mm |
| **Radial clearance class** | C3 |
| **Mass** | 0,63 kg |

## PRODUCT PERFORMANCE

# 22210EAW33ZZC3
Spherical roller bearings

| PRODUCT PERFORMANCE | |
|---|---|
| **C - Dynamic load** | 130000000 mN |
| **C0 - Static load** | 124000000 mN |
| **Cu - Fatigue limit load** | 15100000 mN |
| **e - Coefficient** | 0.24 |
| **Y0 - Static axial load coefficient** | 2.78 |
| **Y1 - Lower axial load coefficient** | 2.84 |
| **Y2 - Upper axial load coefficient** | 4.23 |
| **N ref - Reference thermal speed** | 40200 °/s |
| **N lim - Mechanical Limit Speed** | 54600 °/s |
| **Tmin - Min operating temperature** | 233,15 °K |
| **Tmax - Max operating temperature** | 473,15 °K |

| BEARING FREQUENCIES | |
|---|---|
| **BPFO - Over rolling frequency on outer ring (60 rpm)** | 7.631 Hz |
| **BPFI - Over rolling frequency on inner (60 rpm)** | 10.37 Hz |
| **BSF - Over rolling frequency on rolling element (60 rpm)** | 6.341 Hz |
| **BRF - Rotational frequency – rolling element (60 rpm)** | 3.171 Hz |
| **FTF - Rotational frequency - cage (60 rpm)** | 0.424 Hz |

| ABUTMENT | |
|---|---|
| **da max - Max shoulder diameter IR** | 59,5 mm |
| **da min - Min shoulder diameter IR** | 57 mm |
| **db - Min diameter for Sleeve** | 0 mm |
| **Da max - Max shoulder diameter OR** | 83 mm |
| **ra max - Max shaft & housing fillet radius** | 1 mm |

## INDUSTRY CALCUL FACTORS

### Equivalent dynamic radial load

$P = X.Fr + Y.Fa$

| $Fa / Fr \leq e$ | | $Fa / Fr > e$ | |
|---|---|---|---|
| X | Y | X | Y |
| 1 | Y1 | 0.67 | Y2 |

### Equivalent static radial load

$Po = Xo.Fr + Yo.Fa$

| $X_0$ | $Y_0$ |
|---|---|
| 1 | Y0 |

The values for e, Y1, Y2 and Y0 are shown in the above table .