# LK1024

LK0728B-B-00KQPKG/US

**Level sensors**

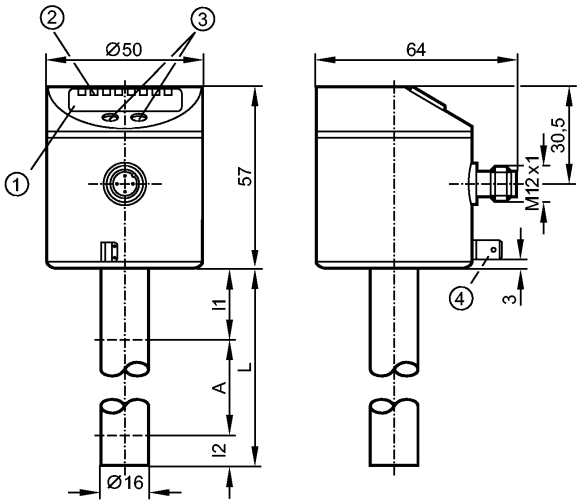


1: 4-digit alphanumeric display
2: LEDs
3: Programming buttons
4: Housing connection (flat-pin connector 6.3 mm following DIN 46244)

Made in Germany

| | | |
|---|---|---|
| **Product characteristics** | | |
| Electronic level sensor | | |
| Connector | | |
| Probe length: L = 728 mm | | |
| 2 switching outputs | | |
| 4-digit alphanumeric display | | |
| **Application** | | |
| Application | | Hydrous coolants, oils, water, media similar to water |
| Cannot be used for: | | extremely conductive and adhering media, granulates and bulk materials, acids and alkalis, food and electroplating applications |
| Dielectric constant medium | | > 2 |
| **Medium temperature oil** | | |
| - Continuous | [°C] | 0...70 |
| - Short time | [°C] | 0...90 |
| Medium temperature water and hydrous media | [°C] | 0...35 (LK1024 + E43102: 0...55) **) |
| Medium temperature coolant emulsions | [°C] | 0...35 (LK1024 + E43102: 0...55) **) |
| Maximum speed of the change of level | [mm/s] | 300 |
| **Electrical data** | | |
| Electrical design | | DC PNP |
| Operating voltage | [V] | 18...30 DC |
| Current consumption | [mA] | < 60 |
| Protection class | | III |
| Reverse polarity protection | | yes |
| **Outputs** | | |
| Output | | 2 switching outputs |
| Output function | | 2 x normally open / closed programmable |

# LK1024

LK0728B-B-00KQPKG/US

**Level sensors**

| | | |
|---|---|---|
| Current rating | [mA] | 200 |
| Voltage drop | [V] | < 2.5 |
| Short-circuit protection | | thermal, pulsed |
| Overload protection | | yes |
| **Measuring / setting range** | | |
| Probe length L | [mm] | 728 |
| Active range A | [mm] | 585 |
| Inactive range I1 / I2 | [mm] | 102 / 40 |
| Setting range | | |
| Set point, SP | [mm] | 60...590 |
| Reset point, rP | [mm] | 50...580 |
| in steps of | [mm] | 10 |
| Hysteresis | [mm] | 10 |
| Overflow protection OP | [mm] | 200 - 240 - 280 - 310 - 350 - 390 - 420 - 460 - 500 - 530 - 570 - 610 |
| Hysteresis OP | [mm] | 4 |
| **Accuracy / deviations** | | |
| Deviations (% of value of measuring range) | | |
| Switch point accuracy | | ± 5 |
| Repeatability | | ± 2 |
| **Reaction times** | | |
| Power-on delay time | [s] | 3 |
| **Software / programming** | | |
| Programming options | | hysteresis / window function; N.O. / N.C; position of SP/rP; position of OP; OP adjustment; medium adjustment; offset; display unit |
| **Environment** | | |
| Ambient temperature | [°C] | 0...60 |
| Storage temperature | [°C] | -25...80 |
| Maximum vessel pressure | [bar] | 0.5 (when mounted with mounting accessories E43001 - E43007) |
| Protection | | IP 67 |
| **Tests / approvals** | | |
| EMC | | EN 61000-4-2 ESD: 4 kV CD / 8 kV AD<br>EN 61000-4-3 HF radiated: 10 V/m<br>EN 61000-4-4 Burst: 2 kV<br>EN 61000-4-6 HF conducted: 10 V |
| Shock resistance | | DIN EN 60068-2-29: 15 g (11 ms) |
| Vibration resistance | | DIN EN 60068-2-6 5 g (10...2000 Hz) |
| MTTF | [Years] | 228 |
| **Mechanical data** | | |
| Materials (wetted parts) | | PP |
| Housing materials | | stainless steel (304S15); FKM; NBR; PBT; PC; PEI; PP; TPE / V |
| Weight | [kg] | 0.507 |
| **Displays / operating elements** | | |
| Display | | Display unit / status 2 x LED green<br>Switching status 2 x LED yellow<br>Measured values 4-digit alphanumeric display<br>Programming 4-digit alphanumeric display |

efector160

# LK1024

LK0728B-B-00KQPKG/US

**Level sensors**

## Electrical connection

| | |
|---|---|
| Connection | M12 connector (according to EN 61076-2-101); Gold-plated contacts |

**Wiring**

Programming of the output function:
Hno = hysteresis / normally open
Hnc = hysteresis / normally closed
Fno = window function / normally open
Fnc = window function / normally closed




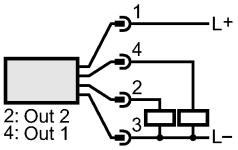


## Remarks

| | |
|---|---|
| Remarks | cULus - Class 2 source required<br>**) for water and hydrous media with temperatures > 35 °C install the unit into a climatic tube<br>(order no. E43102) |
| Pack quantity [piece] | 1 |