EY3090

Connection cable for the connection of safety light curtains

ADAPTER CABLE RECEIVER AUTO

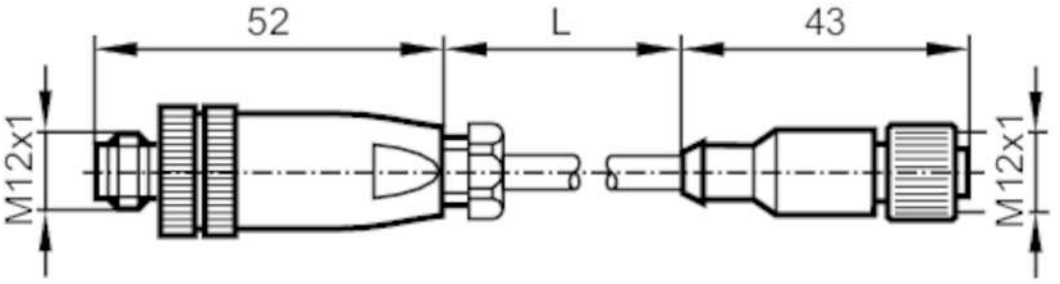

Application		
Special feature		Free from silicone; Halogen-free; Gold-plated contacts
Design		For the connection of safety light curtains / safety light grids with OSSD, for receivers
Application		configured for automatic operation
Free from silicone		yes
Electrical data		
Operating voltage	[V]	< 36 DC
Protection class		II
Max. current load total	[A]	4; (...40 °C)
Operating conditions		
Protection		IP 67
Mechanical data		
Weight	[g]	47
Materials		TPU orange; PA
Moulded-body material		TPU / PA
Material nut		brass, nickel-plated
Remarks		
Pack quantity		1 pcs.

EY3090

Connection cable for the connection of safety light curtains

ADAPTER CABLE RECEIVER AUTO

Electrical connection

Cable: 0.1 m, PUR, Halogen-free, black, Ø 4.9 mm; 5 x 0.34 mm² (42 x Ø 0.1 mm)

Electrical connection - plug

Connector: 1 x M12, straight; coding: A; Moulded body: TPU / PA, orange; Locking: brass, nickel-plated; Contacts: gold-plated; Tightening torque: 0.6...0.7 Nm

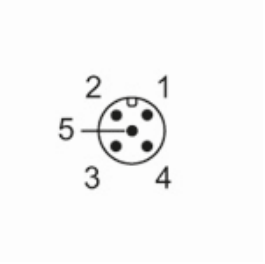

Connection

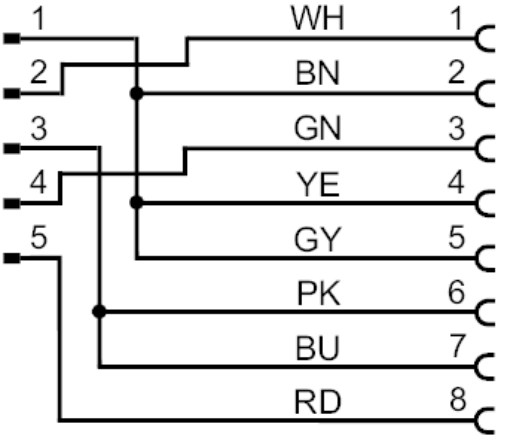

	Core colours :
BN =	brown
BU =	blue
GN =	green
GY =	grey
PK =	pink
RD =	red
WH =	white
YE =	yellow

Electrical connection - socket

Connector: 1 x M12, straight; coding: A; Moulded body: TPU / PA, orange; Locking: brass, nickel-plated; Contacts: gold-plated; Tightening torque: 0.6...1.5 Nm

