# DATASHEET - NZMH2-VE100



Similar to illustration

**Circuit-breaker, 3p, 100A**

| | |
|---|---|
| **Part no.** | **NZMH2-VE100** |
| **Catalog No.** | **259125** |
| **EL-Nummer (Norway)** | **0004315543** |

Powering Business Worldwide

## Delivery program

| | | | |
|---|---|---|---|
| Product range | | | Circuit-breaker |
| Protective function | | | Systems, cable, selectivity and generator protection |
| Standard/Approval | | | IEC |
| Installation type | | | Fixed |
| Release system | | | Electronic release |
| Construction size | | | NZM2 |
| Description | | | R.m.s. value measurement and “thermal memory”<br>Adjustable time delay setting to overcome current peaks tr at 6 x Ir also infinity (without overload releases)<br>Adjustable delay time tsd<br>$i^2t$ constant function: fixed OFF |
| Number of poles | | | 3 pole |
| Standard equipment | | | Screw connection |
| **Switching capacity** | | | |
| 400/415 V 50 Hz | $I_{cu}$ | kA | 150 |
| **Rated current = rated uninterrupted current** | | | |
| Rated current = rated uninterrupted current | $I_n = I_u$ | A | 100 |
| **Setting range** | | | |
| Overload trip | | | |
|  | $I_r$ | A | 50 - 100 |
| Short-circuit releases<br> | | | |
| Non-delayed<br> | $I_i = I_n$ x … | | 1200 A fixed |
| Delayed<br> | $I_{sd} = I_r$ x … | | 2 - 10 |

## Technical data

### General

| | | | |
|---|---|---|---|
| Standards | | | IEC/EN 60947 |
| Protection against direct contact | | | Finger and back of hand proof to VDE 0106 Part 100 |
| Climatic proofing | | | Damp heat, constant, to IEC 60068-2-78<br>Damp heat, cyclic, to IEC 60068-2-30 |
| Ambient temperature | | | |
| Ambient temperature, storage | | °C | - 40 - + 70 |
| Operation | | °C | -25 - +70 |
| Mechanical shock resistance (10 ms half-sinusoidal shock) according to IEC 60068-2-27 | | g | 20 (half-sinusoidal shock 20 ms) |
| Safe isolation to EN 61140 | | | |
| Between auxiliary contacts and main contacts | | V AC | 500 |
| between the auxiliary contacts | | V AC | 300 |
| Weight | | kg | 2.345 |

| | | | |
|---|---|---|---|
| Mounting position | | | Vertical and 90° in all directions<br>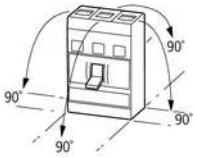<br><br>With XFI earth-fault release:<br>- NZM1, N1, NZM2, N2: vertical and 90° in all directions<br>with plug-in unit<br>- NZM1, N1, NZM2, N2: vertical, 90° right/left<br>with withdrawable unit:<br>- NZM3, N3: vertical, 90° right/left<br>- NZM4, N4: vertical<br>with remote operator:<br>- NZM2, N(S)2, NZM3, N(S)3, NZM4, N(S)4: vertical and 90° in all directions |
| Direction of incoming supply | | | as required |
| Degree of protection | | | |
| Device | | | In the operating controls area: IP20 (basic degree of protection) |
| Enclosures | | | With insulating surround: IP40<br>With door coupling rotary handle: IP66 |
| Terminations | | | Tunnel terminal: IP10<br>Phase isolator and strip terminal: IP00 |
| Other technical data (sheet catalogue) | | | Temperature dependency, Derating |

## Circuit-breakers

| | | | |
|---|---|---|---|
| Rated current = rated uninterrupted current | $I_n = I_u$ | A | 100 |
| Rated surge voltage invariability | $U_{imp}$ | | |
| Main contacts | | V | 8000 |
| Auxiliary contacts | | V | 6000 |
| Rated operational voltage | $U_e$ | V AC | 690 |
| Overvoltage category/pollution degree | | | III/3 |
| Rated insulation voltage | $U_i$ | V | 1000 |
| Use in unearthed supply systems | | V | ≦ 690 |

## Switching capacity

| | | | |
|---|---|---|---|
| Rated short-circuit making capacity | $I_{cm}$ | | |
| 240 V | $I_{cm}$ | kA | 330 |
| 400/415 V | $I_{cm}$ | kA | 330 |
| 440 V 50/60 Hz | $I_{cm}$ | kA | 286 |
| 525 V 50/60 Hz | $I_{cm}$ | kA | 105 |
| 690 V 50/60 H | Ic | kA | 40 |
| Rated short-circuit breaking capacity $I_{cn}$ | $I_{cn}$ | | |
| Icu to IEC/EN 60947 test cycle O-t-CO | Icu | kA | |
| 240 V 50/60 Hz | $I_{cu}$ | kA | 150 |
| 400/415 V 50/60 Hz | $I_{cu}$ | kA | 150 |
| 440 V 50/60 Hz | $I_{cu}$ | kA | 130 |
| 525 V 50/60 Hz | $I_{cu}$ | kA | 50 |
| 690 V 50/60 Hz | $I_{cu}$ | kA | 20 |
| Ics to IEC/EN 60947 test cycle O-t-CO-t-CO | Ics | kA | |
| 240 V 50/60 Hz | $I_{cs}$ | kA | 150 |
| 400/415 V 50/60 Hz | $I_{cs}$ | kA | 150 |
| 440 V 50/60 Hz | $I_{cs}$ | kA | 130 |
| 525 V 50/60 Hz | $I_{cs}$ | kA | 37.5 |
| 690 V 50/60 Hz | $I_{cs}$ | kA | 5 |
| | | | Maximum back-up fuse, if the expected short-circuit currents at the installation location exceed the switching capacity of the circuit-breaker. |
| Rated short-time withstand current | | | |
| t = 0.3 s | $I_{cw}$ | kA | 1.9 |
| t = 1 s | $I_{cw}$ | kA | 1.9 |
| Utilization category to IEC/EN 60947-2 | | | A |
| Lifespan, mechanical(of which max. 50 % trip by shunt/undervoltage release) | Operations | | 20000 |
| Lifespan, electrical | | | |
| AC-1 | | | |

| | | | |
|---|---|---|---|
| 400 V 50/60 Hz | Operations | | 10000 |
| 415 V 50/60 Hz | Operations | | 10000 |
| 690 V 50/60 Hz | Operations | | 7500 |
| AC--3 | | | |
| 400 V 50/60 Hz | Operations | | 6500 |
| 415 V 50/60 Hz | Operations | | 6500 |
| 690 V 50/60 Hz | Operations | | 5000 |
| Max. operating frequency | | Ops/h | 120 |
| Total break time at short-circuit | | ms | < 10 |

## Terminal capacity

| | | | |
|---|---|---|---|
| Standard equipment | | | Screw connection |
| Optional accessories | | | Box terminal<br>Tunnel terminal<br>connection on rear |
| Round copper conductor | | | |
| Box terminal | | | |
| Solid | | $mm^2$ | 1 x (10 - 16)<br>2 x (6 - 16) |
| Stranded | | $mm^2$ | 1 x (25 - 185)<br>2 x (25 - 70) |
| Tunnel terminal | | | |
| Solid | | $mm^2$ | 1 x 16 |
| Stranded | | | |
| 1-hole | | $mm^2$ | 1 x (25 - 185) |
| Bolt terminal and rear-side connection | | | |
| Direct on the switch | | | |
| Solid | | $mm^2$ | 1 x (10 - 16)<br>2 x (6 - 16) |
| Stranded | | $mm^2$ | 1 x (25 - 185)<br>2 x (25 - 70) |
| Al circular conductor | | | |
| Tunnel terminal | | | |
| Solid | | $mm^2$ | 1 x 16 |
| Stranded | | | |
| Stranded | | $mm^2$ | 1 x (25 - 185) |
| Bolt terminal and rear-side connection | | | |
| Direct on the switch | | | |
| Solid | | $mm^2$ | 1 x (10 - 16)<br>2 x (10 - 16) |
| Stranded | | $mm^2$ | 1 x (25 - 50)<br>2 x (25 - 50) |
| Cu strip (number of segments x width x segment thickness) | | | |
| Box terminal | | | |
| | min. | mm | 2 x 9 x 0.8 |
| | max. | mm | 10 x 16 x 0.8<br>(2x) 8 x 15.5 x 0,8 |
| Bolt terminal and rear-side connection | | | |
| Flat copper strip, with holes | min. | mm | 2 x 16 x 0.8 |
| Flat copper strip, with holes | max. | mm | 10 x 24 x 0.8 |
| Copper busbar (width x thickness) | mm | | |
| Bolt terminal and rear-side connection | | | |
| Screw connection | | | M8 |
| Direct on the switch | | | |
| | min. | mm | 16 x 5 |
| | max. | mm | 24 x 8 |
| Control cables | | | |
| | | $mm^2$ | 1 x (0.75 - 2.5)<br>2 x (0.75 - 1.5) |

## Design verification as per IEC/EN 61439

| | | | |
|---|---|---|---|
| Technical data for design verification | | | |
| Rated operational current for specified heat dissipation | $I_n$ | A | 100 |
| Equipment heat dissipation, current-dependent | $P_{vid}$ | W | 8.25 |
| Operating ambient temperature min. | | °C | -25 |
| Operating ambient temperature max. | | °C | 70 |
| IEC/EN 61439 design verification | | | |
| 10.2 Strength of materials and parts | | | |
| 10.2.2 Corrosion resistance | | | Meets the product standard's requirements. |
| 10.2.3.1 Verification of thermal stability of enclosures | | | Meets the product standard's requirements. |
| 10.2.3.2 Verification of resistance of insulating materials to normal heat | | | Meets the product standard's requirements. |
| 10.2.3.3 Verification of resistance of insulating materials to abnormal heat and fire due to internal electric effects | | | Meets the product standard's requirements. |
| 10.2.4 Resistance to ultra-violet (UV) radiation | | | Meets the product standard's requirements. |
| 10.2.5 Lifting | | | Does not apply, since the entire switchgear needs to be evaluated. |
| 10.2.6 Mechanical impact | | | Does not apply, since the entire switchgear needs to be evaluated. |
| 10.2.7 Inscriptions | | | Meets the product standard's requirements. |
| 10.3 Degree of protection of ASSEMBLIES | | | Does not apply, since the entire switchgear needs to be evaluated. |
| 10.4 Clearances and creepage distances | | | Meets the product standard's requirements. |
| 10.5 Protection against electric shock | | | Does not apply, since the entire switchgear needs to be evaluated. |
| 10.6 Incorporation of switching devices and components | | | Does not apply, since the entire switchgear needs to be evaluated. |
| 10.7 Internal electrical circuits and connections | | | Is the panel builder's responsibility. |
| 10.8 Connections for external conductors | | | Is the panel builder's responsibility. |
| 10.9 Insulation properties | | | |
| 10.9.2 Power-frequency electric strength | | | Is the panel builder's responsibility. |
| 10.9.3 Impulse withstand voltage | | | Is the panel builder's responsibility. |
| 10.9.4 Testing of enclosures made of insulating material | | | Is the panel builder's responsibility. |
| 10.10 Temperature rise | | | The panel builder is responsible for the temperature rise calculation. Eaton will provide heat dissipation data for the devices. |
| 10.11 Short-circuit rating | | | Is the panel builder's responsibility. The specifications for the switchgear must be observed. |
| 10.12 Electromagnetic compatibility | | | Is the panel builder's responsibility. The specifications for the switchgear must be observed. |
| 10.13 Mechanical function | | | The device meets the requirements, provided the information in the instruction leaflet (IL) is observed. |

## Technical data ETIM 7.0

| | | |
|---|---|---|
| Low-voltage industrial components (EG000017) / Power circuit-breaker for trafo/generator/installation protection (EC000228) | | |
| Electric engineering, automation, process control engineering / Low-voltage switch technology / Circuit breaker (LV < 1 kV) / Circuit breaker for power transformer, generator and system protection (ecl@ss10.0.1-27-37-04-09 [AJZ716013]) | | |
| Rated permanent current Iu | A | 100 |
| Rated voltage | V | 690 - 690 |
| Rated short-circuit breaking capacity Icu at 400 V, 50 Hz | kA | 150 |
| Overload release current setting | A | 50 - 100 |
| Adjustment range short-term delayed short-circuit release | A | 100 - 1000 |
| Adjustment range undelayed short-circuit release | A | 1200 - 1200 |
| Integrated earth fault protection | | No |
| Type of electrical connection of main circuit | | Screw connection |
| Device construction | | Built-in device fixed built-in technique |
| Suitable for DIN rail (top hat rail) mounting | | No |
| DIN rail (top hat rail) mounting optional | | Yes |
| Number of auxiliary contacts as normally closed contact | | 0 |
| Number of auxiliary contacts as normally open contact | | 0 |
| Number of auxiliary contacts as change-over contact | | 0 |
| With switched-off indicator | | No |
| With under voltage release | | No |
| Number of poles | | 3 |

| | |
|---|---|
| Position of connection for main current circuit | Front side |
| Type of control element | Rocker lever |
| Complete device with protection unit | Yes |
| Motor drive integrated | No |
| Motor drive optional | Yes |
| Degree of protection (IP) | IP20 |

## Characteristics

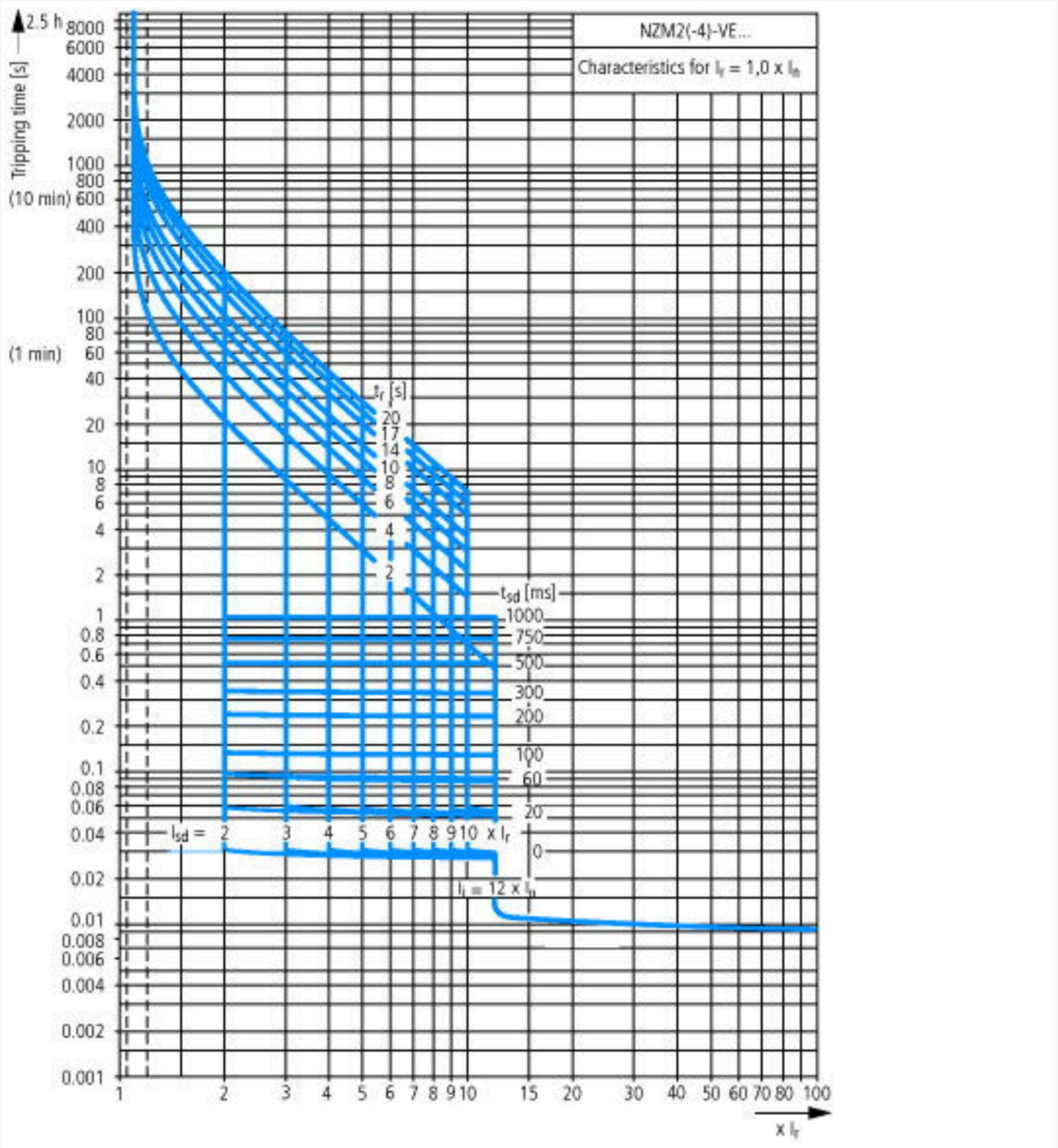

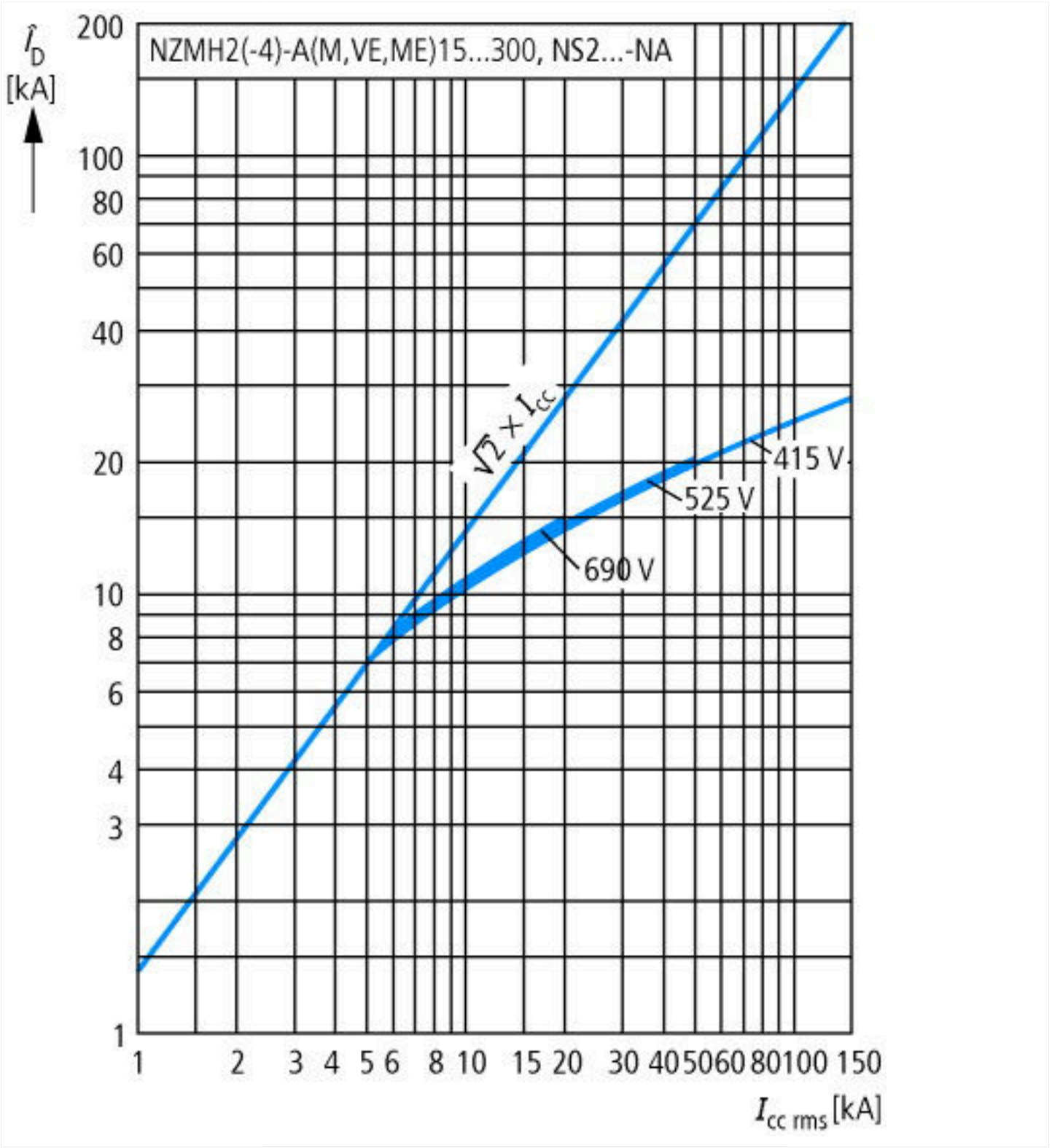


Let-through current

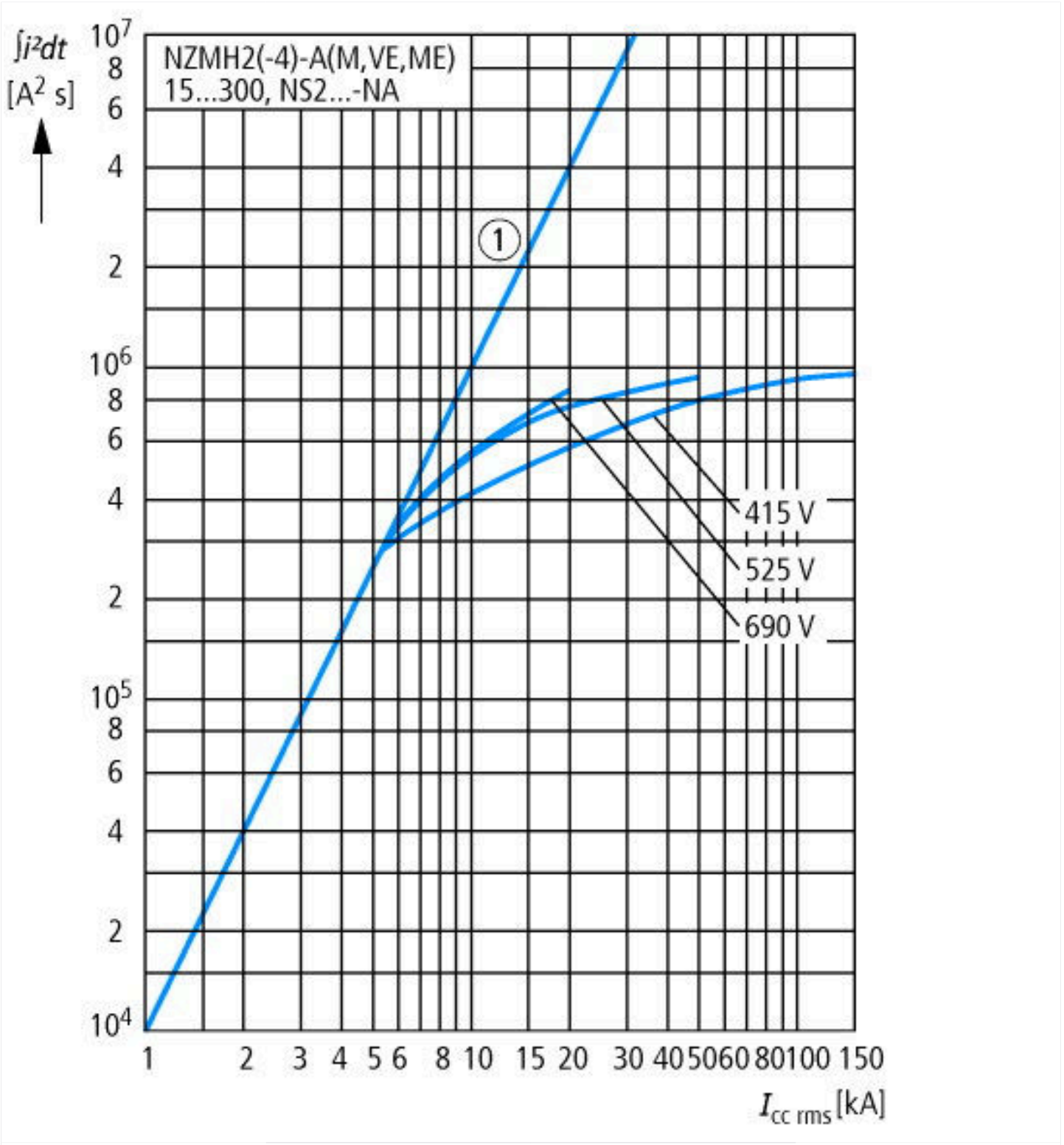


Let-through energy

## Dimensions

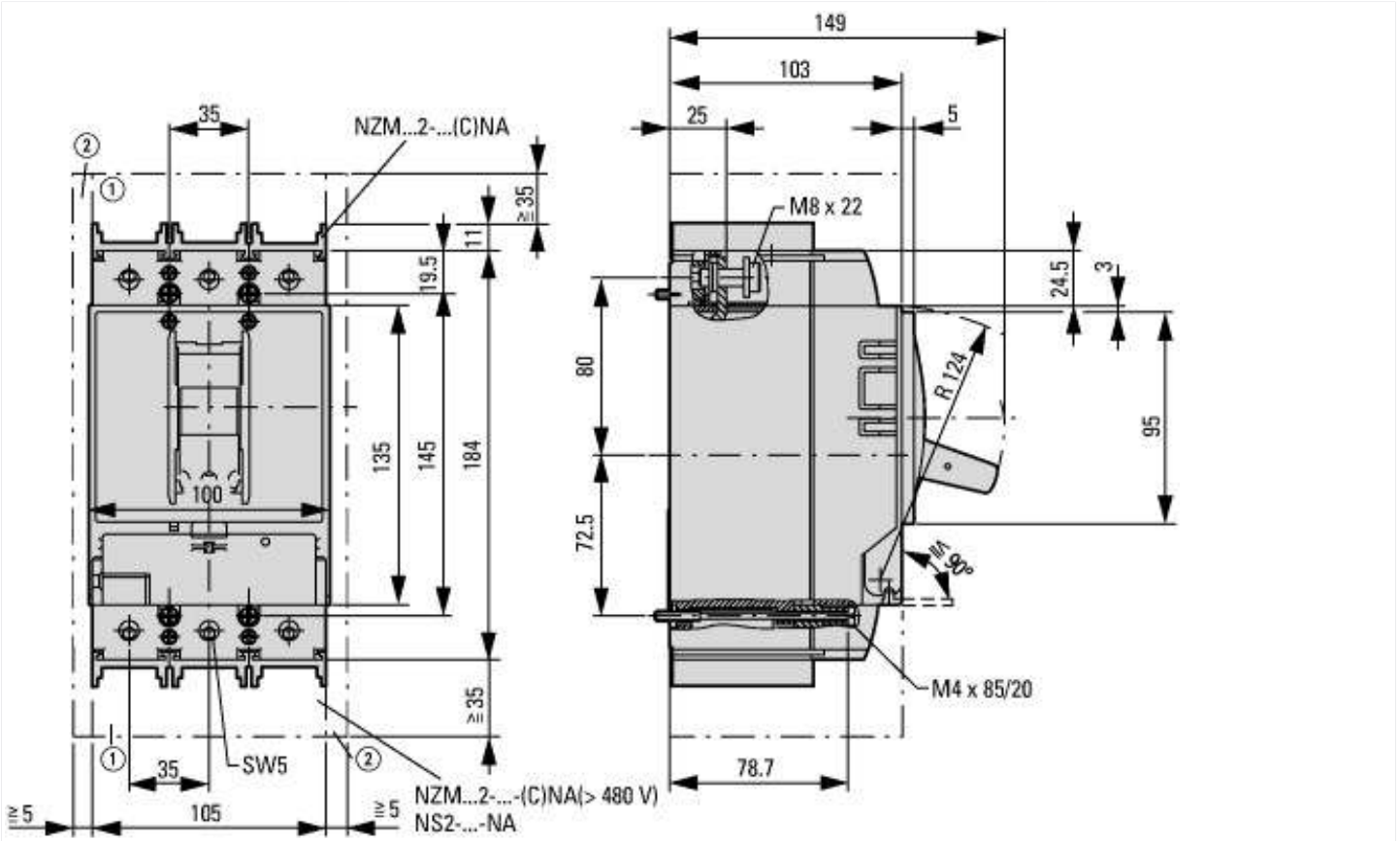


① Blow out area, minimum clearance to adjacent parts
② Minimum clearance to adjacent parts

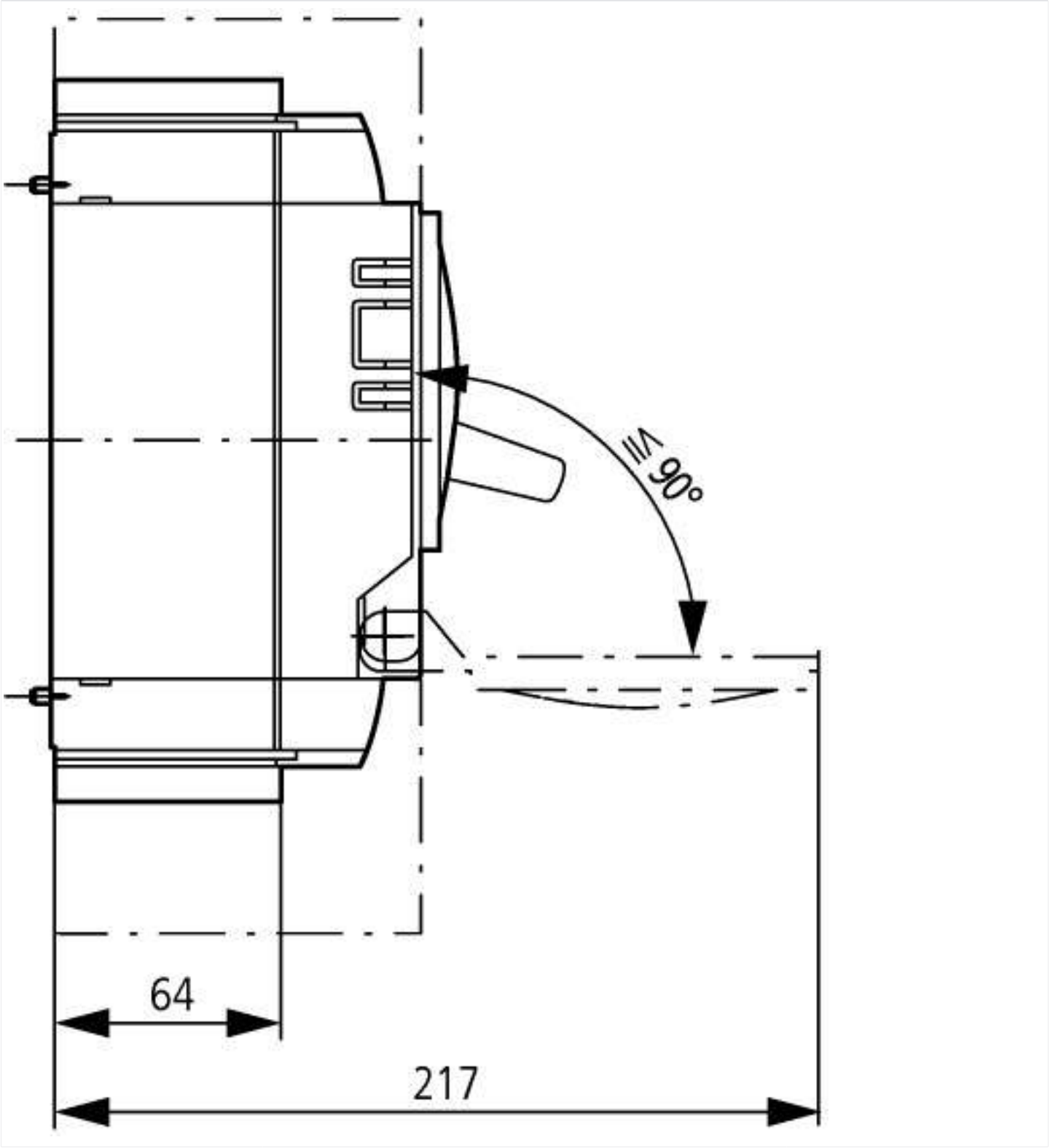


## Additional product information (links)

| IL01206006Z (AWA1230-1916) Circuit-Breaker, basic unit | |
|---|---|
| IL01206006Z (AWA1230-1916) Circuit-Breaker, basic unit | https://es-assets.eaton.com/DOCUMENTATION/AWA_INSTRUCTIONS/IL01206006Z2015_11.pdf |
| Temperature dependency, Derating | http://ecat.moeller.net/flip-cat/?edition=HPLEN&startpage=17.172 |
| CurveSelect characteristics program | http://www.eaton.eu/DE/Europe/Electrical/CustomerSupport/ConfigurationTools/CharacteristicsProgram/index.htm |
| Eaton configurator | http://www.eaton.eu/DE/Europe/Electrical/CustomerSupport/ConfigurationTools/ConfiguratorCircuitBreaker/index.htm |
| additional technical information for NZM power switch | https://es-assets.eaton.com/DOCUMENTATION/PDF/nzm_technic_de_en.pdf |


© 02/2021 by Eaton Industries GmbH