W2S130-AA25-01

AC axial compact fan



ebm-papst Mulfingen GmbH & Co. KG
Bachmühle 2 · D-74673 Mulfingen
Phone +49 7938 81-0
Fax +49 7938 81-110
info1@de.ebmpapst.com
www.ebmpapst.com

Limited partnership · Headquarters Mulfingen
County court Stuttgart · HRA 590344

General partner Elektrobau Mulfingen GmbH · Headquarters Mulfingen
County court Stuttgart · HRB 590142

Nominal data

Type	**W2S130-AA25-01**
Motor	**M2S052-CA**

Phase		1~	1~
Nominal voltage	VAC	115	115
Frequency	Hz	50	60
Type of data definition		fa	fa
Valid for approval / standard		CE	CE
Speed (rpm)	min^{-1}	2800	3250
Power input	W	41	38
Current draw	A	0.56	0.47
Max. back pressure	Pa	80	120
Min. ambient temperature	°C	-25	-25
Max. ambient temperature	°C	50	70

ml = Max. load · me = Max. efficiency · fa = Running at free air · cs = Customer specs · cu = Customer unit
Subject to alterations

AC axial compact fan

Technical features

Mass	1.1 kg
Size	130 mm
Motor size	52
Surface of rotor	Rotor open, coated in black
Material of impeller	Sheet steel, coated in black
Housing material	Die-cast aluminum, coated in black
Number of blades	7
Direction of air flow	V
Direction of rotation	Counter-clockwise, seen on rotor
Type of protection	IP20
Insulation class	"B"
Humidity (F) / environmental protection class (H)	H0+
Max. permissible ambient motor temp. (transp./ storage)	+ 80 °C
Min. permissible ambient motor temp. (transp./storage)	- 40 °C
Mounting position	Any
Condensation drainage holes	None, open rotor
Operation mode	S1
Motor bearing	Ball bearing
Touch current acc. IEC 60990 (measuring network Fig. 4, TN system)	< 0.75 mA
Motor protection	Thermal overload protector (TOP) wired internally
Protection class	I (if protective earth is connected by customer)
Product conforming to standard	EN 60335-1; CE
Approval	CSA C22.2 no. 113; CCC; EAC; UL 507; VDE

ebm-papst Mulfingen GmbH & Co. KG · Bachmühle 2 · D-74673 Mulfingen · Phone +49 (0) 7938 81-0 · Fax +49 (0) 7938 81-110 · info1@de.ebmpapst.com · www.ebmpapst.com

AC axial compact fan

Product drawing

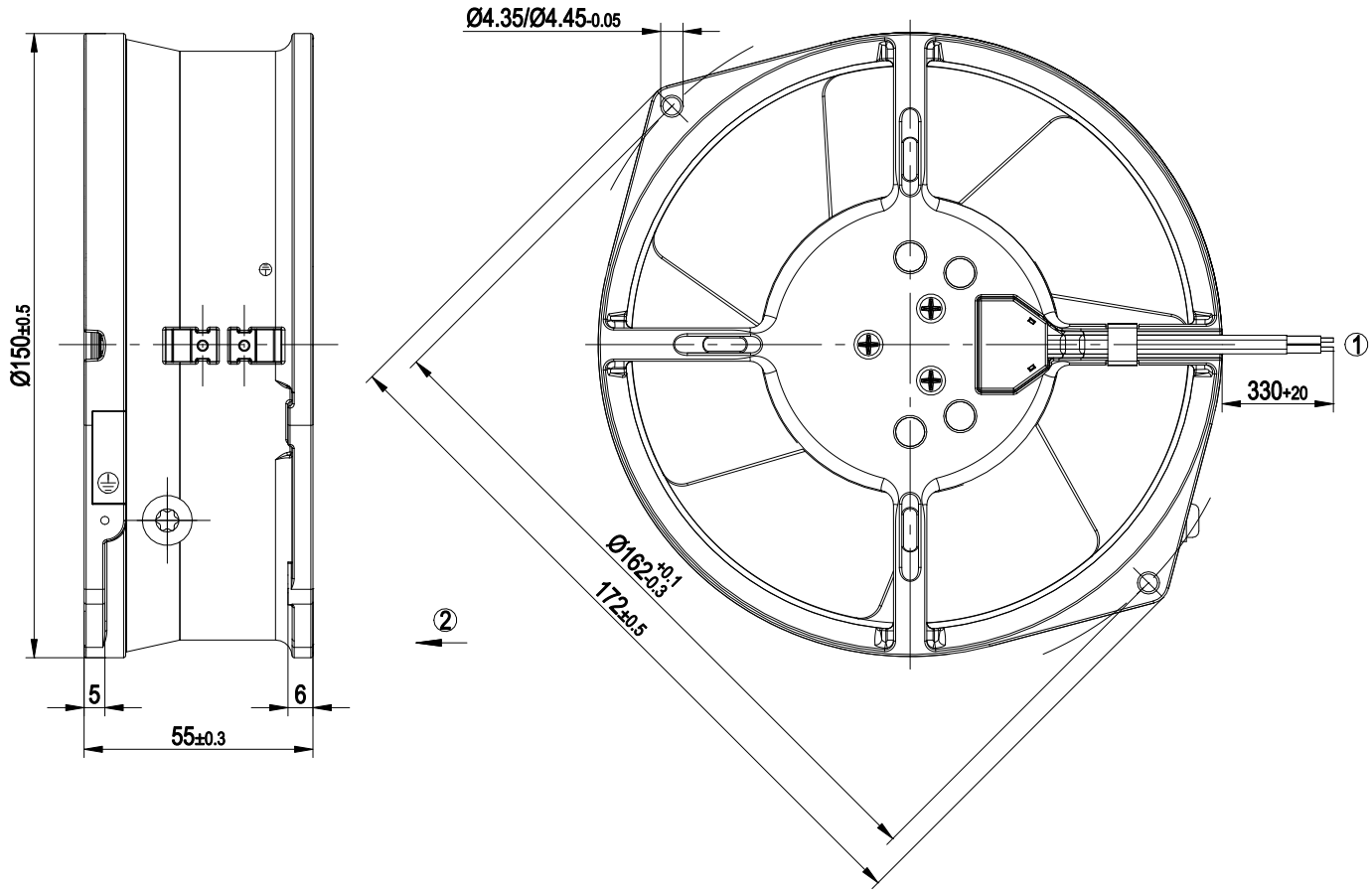

1	Connection line AWG 20, 2 x brass lead tips crimped
2	Direction of air flow "V"

Connection screen

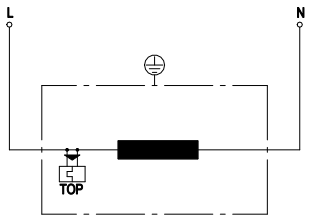

L	= black
N	= black
TOP	= Thermal overload protector

ebm-papst Mulfingen GmbH & Co. KG · Bachmühle 2 · D-74673 Mulfingen · Phone +49 (0) 7938 81-0 · Fax +49 (0) 7938 81-110 · info1@de.ebmpapst.com · www.ebmpapst.com

AC axial compact fan

Charts: Air flow 50 Hz

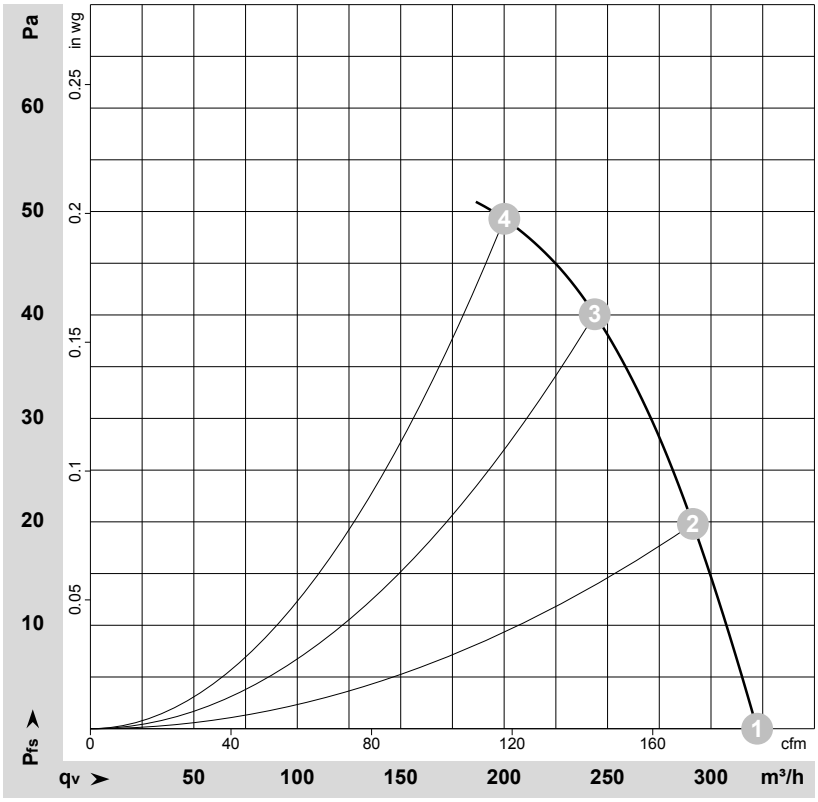

ρ = 1.15 kg/m³ ± 2 %

Measurement: LU-58320-1

Air performance measured as per ISO 5801 Installation category A. For detailed information on the measuring set-up, please contact ebm-papst. Suction-side noise levels: LwA measured as per ISO 13347 / LpA measured with 1m distance to fan axis. The values given are valid under the measuring conditions mentioned above and may vary according to the actual installation situation. With any deviation from the standard set-up, the specific values have to be checked and reviewed with the unit installed.

Measured values

	U	f	n	P_e	I	q_V	p_{fs}	q_V	p_{fs}
	V	Hz	min^{-1}	W	A	m^3/h	Pa	cfm	in. wg
1	115	50	2800	41	0.56	320	0	190	0.00
2	115	50	2800	42	0.56	290	20	170	0.08
3	115	50	2790	43	0.57	245	40	145	0.16
4	115	50	2790	42	0.56	200	50	120	0.20

U = Supply voltage · f = Frequency · n = Speed (rpm) · P_e = Power input · I = Current draw · q_V = Air flow · p_{fs} = Pressure increase

ebm-papst Mulfingen GmbH & Co. KG · Bachmühle 2 · D-74673 Mulfingen · Phone +49 (0) 7938 81-0 · Fax +49 (0) 7938 81-110 · info1@de.ebmpapst.com · www.ebmpapst.com

AC axial compact fan

Charts: Air flow 60 Hz

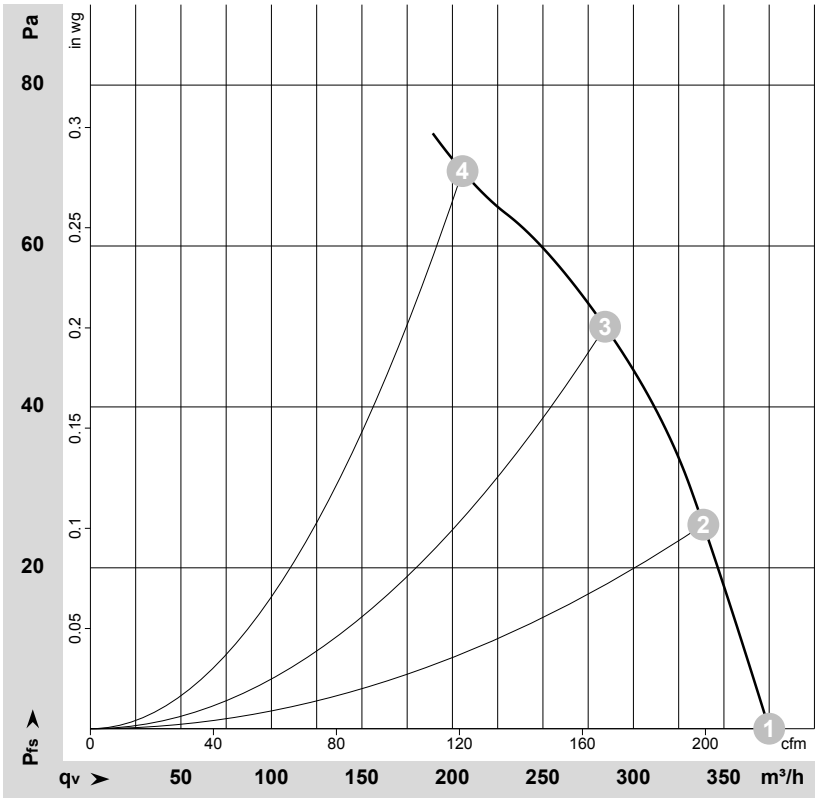

ρ = 1.15 kg/m³ ± 2 %

Measurement: LU-58323-1

Air performance measured as per ISO 5801 Installation category A. For detailed information on the measuring set-up, please contact ebm-papst. Suction-side noise levels: LwA measured as per ISO 13347 / LpA measured with 1m distance to fan axis. The values given are valid under the measuring conditions mentioned above and may vary according to the actual installation situation. With any deviation from the standard set-up, the specific values have to be checked and reviewed with the unit installed.

Measured values

	U	f	n	P_e	I	q_V	p_{fs}	q_V	p_{fs}
	V	Hz	min^{-1}	W	A	m^3/h	Pa	cfm	in. wg
1	115	60	3250	38	0.47	375	0	220	0.00
2	115	60	3210	40	0.48	340	25	200	0.10
3	115	60	3180	41	0.48	285	50	165	0.20
4	115	60	3185	41	0.48	205	70	120	0.28

U = Supply voltage · f = Frequency · n = Speed (rpm) · P_e = Power input · I = Current draw · q_V = Air flow · p_{fs} = Pressure increase

ebm-papst Mulfingen GmbH & Co. KG · Bachmühle 2 · D-74673 Mulfingen · Phone +49 (0) 7938 81-0 · Fax +49 (0) 7938 81-110 · info1@de.ebmpapst.com · www.ebmpapst.com