TIMKEN

The Timken Company
4500 Mt Pleasant St. NW
N. Canton, OH 44720
Phone: (234) 262-3000
E-Mail: CustomerCAD@timken.com • **Web site:** www.timken.com

Timken Part Number 15123 - 15245, Tapered Roller Bearings - TS (Tapered Single) Imperial

This is the most basic and most widely used type of tapered roller bearing. It consists of two main separable parts: the cone (inner ring) assembly and the cup (outer ring). It is typically mounted in opposing pairs on a shaft.



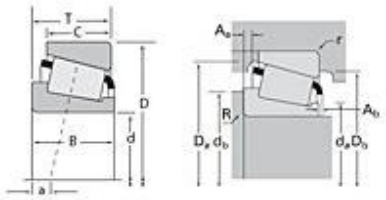

Specifications | Dimensions | Abutment and Fillet Dimensions | Basic Load Ratings | Factors

Specifications

Series	15000
Cone Part Number	15123
Cup Part Number	15245
Design Units	Imperial
Bearing Weight	0.50 lb 0.200 Kg
Cage Type	Stamped Steel

Dimensions

d - Bore	1.2500 in 31.750 mm
D - Cup Outer Diameter	2.4409 in 61.999 mm

B - Cone Width	0.7500 in 19.050 mm
C - Cup Width	0.5625 in 14.288 mm
T - Bearing Width	0.7150 in 18.161 mm

Abutment and Fillet Dimensions

R - Cone Backface "To Clear" Radius[1]	0.14 in 3.560 mm
r - Cup Backface "To Clear" Radius[2]	0.050 in 1.27 mm
da - Cone Frontface Backing Diameter	1.50 in 38.10 mm
db - Cone Backface Backing Diameter	1.73 in 43.94 mm
Da - Cup Frontface Backing Diameter	2.30 in 58.42 mm
Db - Cup Backface Backing Diameter	2.17 in 55.12 mm
Ab - Cage-Cone Frontface Clearance	0.1 in 2.5 mm
Aa - Cage-Cone Backface Clearance	-0.01 in -0.3 mm
a - Effective Center Location[3]	-0.19 in -4.80 mm

Basic Load Ratings

C90 - Dynamic Radial Rating (90 million revolutions)[4]	3490 lbf 15500 N
C1 - Dynamic Radial Rating (1 million revolutions)[5]	13500 lbf 59900 N
C0 - Static Radial Rating	12100 lbf 53900 N
C_{a90} - Dynamic Thrust Rating (90 million revolutions)[6]	2090 lbf 9310 N

Factors

K - Factor[7]	1.67
e - ISO Factor[8]	0.35
Y - ISO Factor[9]	1.71
G1 - Heat Generation Factor (Roller-Raceway)	14.6
G2 - Heat Generation Factor (Rib-Roller End)	7.58
Cg - Geometry Factor	0.0606

[1] These maximum fillet radii will be cleared by the bearing corners.
[2] These maximum fillet radii will be cleared by the bearing corners.
[3] Negative value indicates effective center inside cone backface.
[4] Based on 90 x 10^6 revolutions L_{10} life, for The Timken Company life calculation method. C_{90} and C_{a90} are radial and thrust values.
[5] Based on 1 x 10^6 revolutions L_{10} life, for the ISO life calculation method.
[6] Based on 90 x 10^6 revolutions L_{10} life, for The Timken Company life calculation method. C_{90} and C_{a90} are radial and thrust values for a single-row, $C_{90(2)}$ is the two-row radial value.
[7] These factors apply for both inch and metric calculations. Consult your Timken representative for instruction on use.
[8] These factors apply for both inch and metric calculations. Consult your Timken representative for instruction on use.
[9] These factors apply for both inch and metric calculations. Consult your Timken representative for instruction on use.

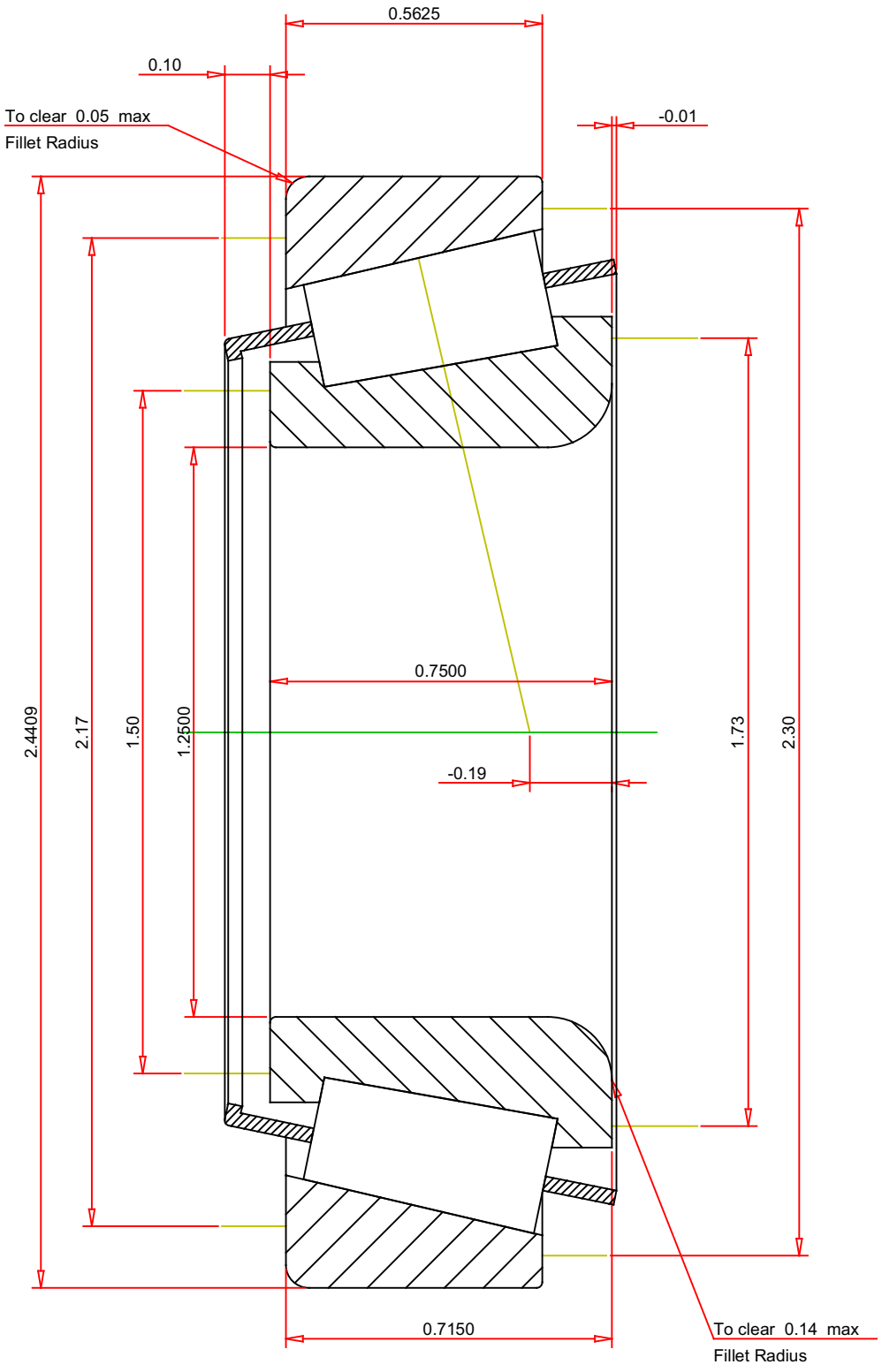

IMPERIAL UNITS

ISO Factor - e	0.35	
ISO Factor - Y	1.71	
Bearing Weight	0.5	lb
Number of Rollers Per Row	15	
Effective Center Location	-0.19	inch

TIMKEN®

THE TIMKEN COMPANY
NORTH CANTON, OHIO USA

15123 - 15245
TS BEARING ASSEMBLY

K Factor	1.67	
Dynamic Radial Rating - C90	3490	lbf
Dynamic Thrust Rating - Ca90	2090	lbf
Static Radial Rating - C0	12100	lbf
Dynamic Radial Rating - C1	13500	lbf

Every reasonable effort has been made to ensure the accuracy of the information contained in this writing, but no liability is accepted for errors, omissions or for any other reason.

FOR DISCUSSION ONLY