Product data sheet
Characteristics

ZCE62
limit switch head ZCE - side metal plunger adjustable

The information provided in this documentation contains general descriptions and/or technical characteristics of the performance of the products contained herein.
This documentation is not intended as a substitute for and is not to be used for determining suitability or reliability of these products for specific user applications.
It is the duty of any such user or integrator to perform the appropriate and complete risk analysis, evaluation and testing of the products with respect to the relevant specific application or use thereof.
Neither Schneider Electric Industries SAS nor any of its affiliates or subsidiaries shall be responsible or liable for misuse of the information contained herein.

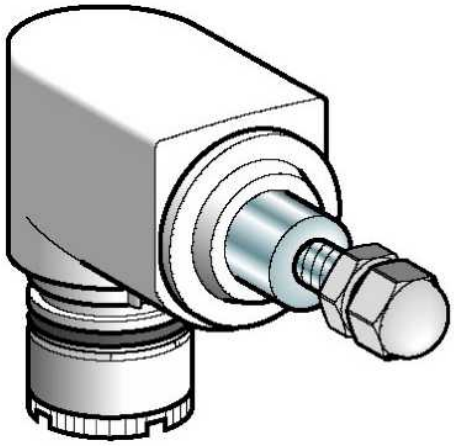

Main

Range of product	OsiSense XC
Series name	Standard format
Product or component type	Limit switch head
Device short name	ZCE
Head type	Plunger head
Product compatibility	XCKD XCKP XCKT XCMD

Associated body	ZCD21 ZCD21M12 ZCD25 ZCD26 ZCD27 ZCD28 ZCD29 ZCD29M12 ZCD31 ZCD35 ZCD37 ZCD39 ZCMD21C12 ZCMD21L08R12 ZCMD21L08U78 ZCMD21L1 ZCMD21L2 ZCMD21L5 ZCMD21M12 ZCMD25L1 ZCMD25L2 ZCMD25L5 ZCMD29C12 ZCMD29L1 ZCMD29L2 ZCMD29L5 ZCMD37L1 ZCMD37L2 ZCMD37L5 ZCMD39L1 ZCMD39L2 ZCMD39L5 ZCMD41L1 ZCMD41L2 ZCMD41L5 ZCMD61C12 ZCMD61M12 ZCMD69C12 ZCMD81L1 ZCMD81L2 ZCMD81L5 ZCP21 ZCP21M12 ZCP25 ZCP26 ZCP27 ZCP28 ZCP29 ZCP29M12 ZCP31 ZCP35 ZCP37 ZCP39 ZCT21G11 ZCT21N12 ZCT21P16 ZCT25G11 ZCT25N12 ZCT25P16 ZCT26G11 ZCT26N12 ZCT26P16 ZCT27G11 ZCT27N12 ZCT27P16 ZCT28G11 ZCT28N12 ZCT28P16
Movement of operating head	Linear
Type of operator	Side plunger spring return metal (adjustable)
Type of approach	Vertical approach 1 direction

Complementary

Positive opening	With

Environment

Ambient air temperature for operation	-25...70 °C
Ambient air temperature for storage	-40...70 °C
Environmental characteristic	Standard environment

Offer Sustainability

Sustainable offer status	Green Premium product
RoHS	Compliant - since 0851 - Schneider Electric declaration of conformity
REACh	Reference not containing SVHC above the threshold
Product environmental profile	Available Download Product Environmental
Product end of life instructions	Need no specific recycling operations

Contractual warranty

Period	18 months