RAFIX 22 QR, emergency stop, reset by rotating, Mushroom head red, arrows red



fields of application

- Measurement-control-regulation
- Electrical engineering
- Mechanical and system engineering
- Vehicle construction

special features

- Opaque mushroom
- Options: Key, mechanical switch position indicator, illuminated window, unlocking by pulling
- Robust - also suitable for operation with gloves
- Additional protection against twisting due to threaded ring with claw
- Firmly molded collar seal, cannot twist or be lost during installation.
- 1-person mounting: the element is clamped by the seal in the mounting hole and can then be screwed from behind.
- Degree of protection: IP 65 at the front (Except emergency stop with lock)
- Mounting diameter 22.3 mm
- Separate switching elements required
- Close mounting of actuators possible (min. 30 x 60 mm), since wiring is required axially from behind
- Switching elements with silver contacts (max. 400 V) or gold contacts (max. 35 V / 100 mA)
  Connection types switching elements: cage clamp, screw connection or plug-in connection

The information in this data sheet only contains general descriptions and / or performance features, which may not apply precisely as described to the respective application, and which my change due to further product enhancements. The technical data, illustrations and other information about our products are the mere results of individual technical testing. These descriptions and other product features are only binding if they expressly agreed upon at the time of the conclusion of a binding contract. In all other cases, we reserve the right to make technical changes as well as changes of availability. Pictures and other graphic illustrations are approximations only. All product names may be trademarks or brand names of the RAFI Group or any other sub-supplier of RAFI. The use of such by any third parties for their own purposes may infringe the rights of the respective entity holding those rights.

RAFI GmbH & Co. KG

Ravensburger Str. 128-134
88276 Berg / Ravensburg
Germany
www.rafi-group.com,
info.headquarters@rafi-group.com

description

RAFIX control units are modular units consisting of several parts. In the RAFIX 22 QR family, they always consist of an actuating element, coupling and switching element. For assembly, the switching elements and lamp sockets are first snapped into the coupling. Then this unit is snapped onto the emergency stop. To release it, a bayonet lever must be actuated.

The emergency stop pushbuttons comply with IEC 60 947 and VDE 0113 Part 1. They are protected against unauthorized actuation by a positively guided mechanical movement sequence in accordance with DIN EN ISO 13850. To protect against accidental actuation, a pressure point must be overcome. The pushbutton engages in the pressed position. Due to the shape of the actuating element, the emergency stop pushbutton is protected against blocking. This means that an initiated emergency stop process cannot be interrupted by jamming objects.

Switching position indicator: When not actuated, a green ring is visible on the side.

Emergency stop actuators have the specified tactility and function only when assembled with the appropriate switching elements. Use lamp socket / LED element. A maximum of two switching elements (several contacts) may be used. The middle coupling position may only be used for lighting purposes.

Additional information according to UL certificate:

- These devices should be mounted in an overall enclosure with sufficient stability and with the specified clearances.

technical data

general

Color of mushroom	red
Legending color	red
Collar shape	round
Operating temperature, min.	-25 °C
Operating temperature, max.	70 °C
Storage temperature, min.	-40 °C
Storage temperature, max.	80 °C
illuminated	No
Packaging	Box
Packaging unit	2 pcs.
net weight	35.6 g
Operating life	100,000 cycles
B10	130,000 cycles
B10d	260,000 cycles
Degree of protection, front side, according to DIN EN 60529	IP65
Environment resistance	IEC 60068-2-14 IEC 60068-2-30

direct links

- RAFI eCatalog

The information in this data sheet only contains general descriptions and / or performance features, which may not apply precisely as described to the respective application, and which my change due to further product enhancements. The technical data, illustrations and other information about our products are the mere results of individual technical testing. These descriptions and other product features are only binding if they expressly agreed upon at the time of the conclusion of a binding contract. In all other cases, we reserve the right to make technical changes as well as changes of availability. Pictures and other graphic illustrations are approximations only. All product names may be trademarks or brand names of the RAFI Group or any other sub-supplier of RAFI. The use of such by any third parties for their own purposes may infringe the rights of the respective entity holding those rights.

RAFI GmbH & Co. KG

Ravensburger Str. 128-134
88276 Berg / Ravensburg
Germany
www.rafi-group.com,
info.headquarters@rafi-group.com

	IEC 60068-2-33
	IEC 60068-2-78
MOQ order	10 pcs.
RoHS compliant	Yes
REACH compliant	Yes

mounting diameters

Outside dimension, length	29.8 mm
Outside dimension, width	29.8 mm
Outside dimension, height	63 mm
Mounting hole	22.3 mm
Mounting depth	56.4 mm
Installation height	40.1 mm
Grid, min.	50 x 50 mm
Collar dimension	ø 29,8 mm

mechanical data

Actuation function	latching
Operating force, max.	100 N
Resetting	by rotating
Fixing	Threaded ring
Threaded ring torque, max.	1.2 Nm

The information in this data sheet only contains general descriptions and / or performance features, which may not apply precisely as described to the respective application, and which my change due to further product enhancements. The technical data, illustrations and other information about our products are the mere results of individual technical testing. These descriptions and other product features are only binding if they expressly agreed upon at the time of the conclusion of a binding contract. In all other cases, we reserve the right to make technical changes as well as changes of availability. Pictures and other graphic illustrations are approximations only. All product names may be trademarks or brand names of the RAFI Group or any other sub-supplier of RAFI. The use of such by any third parties for their own purposes may infringe the rights of the respective entity holding those rights.

RAFI GmbH & Co. KG

Ravensburger Str. 128-134
88276 Berg / Ravensburg
Germany
www.rafi-group.com,
info.headquarters@rafi-group.com

drawings

Dimensioned drawing

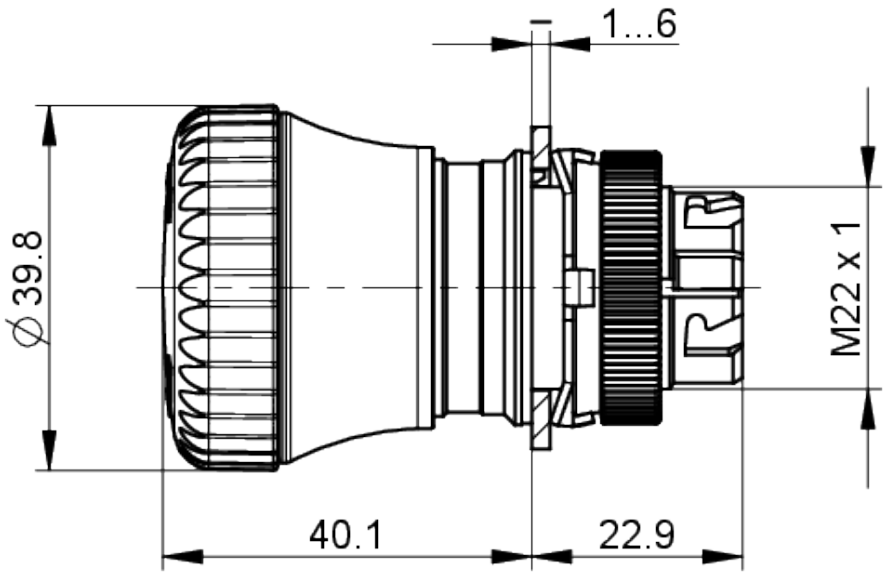

Dimensioned drawing

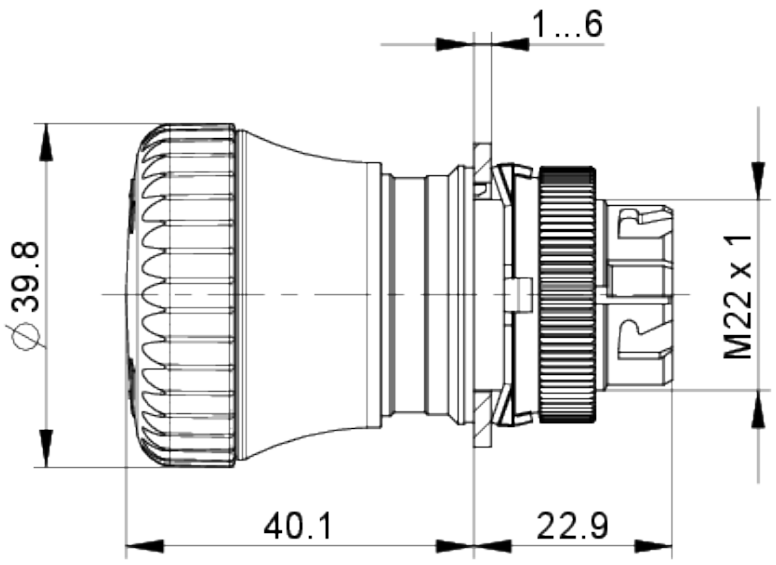

The information in this data sheet only contains general descriptions and / or performance features, which may not apply precisely as described to the respective application, and which my change due to further product enhancements. The technical data, illustrations and other information about our products are the mere results of individual technical testing. These descriptions and other product features are only binding if they expressly agreed upon at the time of the conclusion of a binding contract. In all other cases, we reserve the right to make technical changes as well as changes of availability. Pictures and other graphic illustrations are approximations only. All product names may be trademarks or brand names of the RAFI Group or any other sub-supplier of RAFI. The use of such by any third parties for their own purposes may infringe the rights of the respective entity holding those rights.

RAFI GmbH & Co. KG

Ravensburger Str. 128-134
88276 Berg / Ravensburg
Germany
www.rafi-group.com,
info.headquarters@rafi-group.com

System drawing

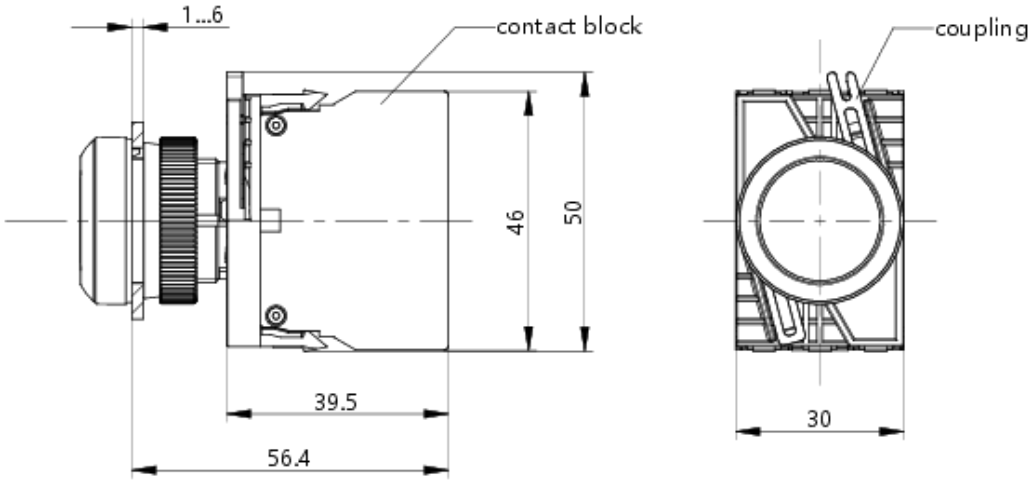

front panel drawing

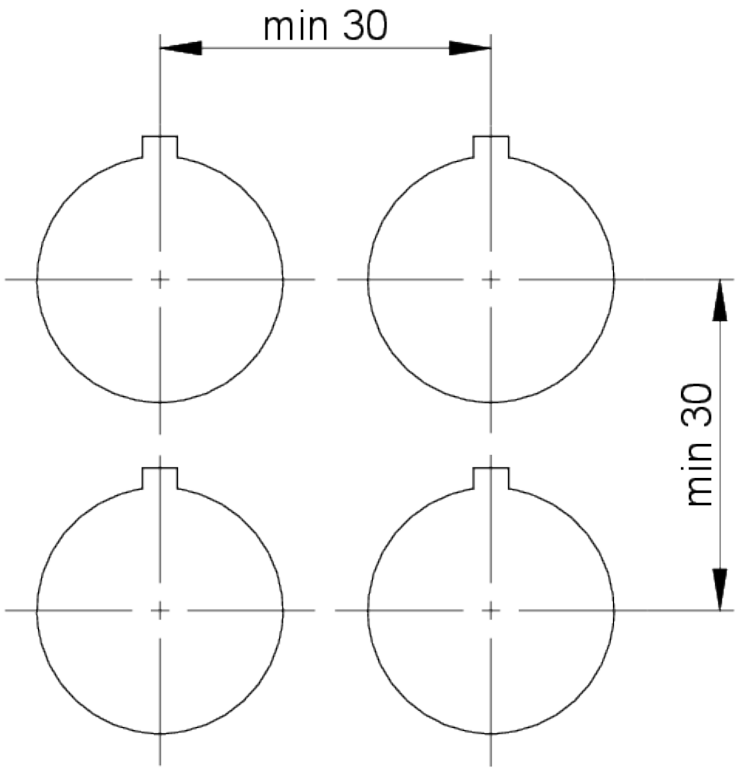

The information in this data sheet only contains general descriptions and / or performance features, which may not apply precisely as described to the respective application, and which my change due to further product enhancements. The technical data, illustrations and other information about our products are the mere results of individual technical testing. These descriptions and other product features are only binding if they expressly agreed upon at the time of the conclusion of a binding contract. In all other cases, we reserve the right to make technical changes as well as changes of availability. Pictures and other graphic illustrations are approximations only. All product names may be trademarks or brand names of the RAFI Group or any other sub-supplier of RAFI. The use of such by any third parties for their own purposes may infringe the rights of the respective entity holding those rights.

RAFI GmbH & Co. KG

Ravensburger Str. 128-134
88276 Berg / Ravensburg
Germany
www.rafi-group.com,
info.headquarters@rafi-group.com

mounting

RAFI

DEUTSCH (DE)

Betriebsanleitung
NOT-HALT-BEFEHLSGERÄTE

Baureihe
RAFIX 16, RAFIX 22 FS⁺, RAFIX 22 FSR, RAFIX 22 QR

1. Sicherheitshinweise
- Vor Inbetriebnahme bitte Betriebsanleitung sorgfältig lesen.
- Not-Halt-Befehlsgeräte erfüllen eine Personenschutz-Funktion. Unsachgemäßer Einbau, sachwidrige Anwendung oder Manipulationen können zu schweren Verletzungen von Personen führen!
- Not-Halt-Befehlsgeräte dürfen nicht umgangen, entfernt oder auf andere Weise unwirksam gemacht werden!
- Vor Beginn der Installation Anlage und Gerät spannungsfrei schalten!
- Vor Erst-Inbetriebnahme der Maschine oder Anlage Not-Halt-Befehlsgerät durch Testbetätigung auf korrekte Montage und Funktion überprüfen.
- Not-Halt-Befehlsgeräte mit sichtbaren Beschädigungen sind unverzüglich auszutauschen.
- Not-Halt-Funktion darf nicht als Ersatz für Schutzmaßnahmen oder andere Sicherheitsfunktionen verwendet werden.
- Not-Halt-Funktion darf die Wirksamkeit von Schutzreinrichtungen oder von Einrichtungen mit anderen Sicherheitsfunktionen nicht beeinträchtigen.

2. Allgemeine Beschreibung und bestimmungsgemäße Verwendung
Not-Halt-Befehlsgeräte sind elektromechanische Schaltgeräte zum Schutz von Personen. Sie dienen der schnellen Abschaltung um Maschinen, Fahrzeuge und Anlagen in einen sicheren Zustand zu bringen, um Gefahren und Schäden für Mensch und Maschine zu vermeiden oder zu verringern.
Für die Inbetriebnahme, den Einsatz und technischen Überprüfungen gelten im speziellen folgende Vorschriften:
- Die Maschinenrichtlinie 2006/42/EG
- Die Sicherheitsvorschriften sowie
- Die Unfallverhütungsvorschriften / Sicherheitsregeln

Hersteller und Benutzer von Maschinen, an denen Not-Halt-Befehlsgeräte eingesetzt werden, tragen die Verantwortung für die Beachtung der Betriebsanleitung, wie auch für die Einhaltung der für sie geltenden Sicherheitsvorschriften und -regeln. Für den Einbau und Betrieb von Not-Halt-Befehlsgeräten müssen zur bestimmungsgemäßen Verwendung folgende Anforderungen beachtet und eine Gefahrenbewertung durchgeführt werden:
- EN ISO 13849-1
- EN ISO 13850
- EN ISO 13849-2
- EN 60204-1/A1
- EN 60947-5-5

3. Produktbeschreibung
Aufbau: Die Not-Halt-Befehlsgeräte bestehen aus einer Kombination von Betätigern mit einem oder mehreren Schaltelementen. Die Not-Halt-Befehlsgeräte gibt es als Einbauversion oder in einem Gehäuse verbaut. Die Betätigung erfolgt durch Drücken, die Entriegelung erfolgt je nach Variante entweder durch:
- Drehbewegung nach rechts oder beide Richtungen (je nach Variante)
- Ziehen entgegen der Betätigungsrichtung

"Aktiv/Inaktiv"-Varianten:
- "Aktiv": beleuchtet, rot, Not-Halt Funktion gegeben
- "Inaktiv": unbeleuchtet, transparent, keine Not-Halt Funktion

Varianten mit Schloss:
- Die Entriegelung erfolgt per Rechtsdrehung des Schlüssels nach Betätigung des Not-Halt-Befehlsgerätes. Der Schlüssel muss in jedem Betätigungszustand abgezogen werden und sollte sich nur während des Entriegelns im Betätiger befinden. Damit lassen sich Verletzungen der Hände vermeiden.

ENGLISH (EN)

Operating Instructions
EMERGENCY STOP Control Units

Series
RAFIX 16, RAFIX 22 FS⁺, RAFIX 22 FSR, RAFIX 22 QR

1. Safety information
- Please read the operating manual carefully before commissioning.
- Emergency stop control components are there to protect personnel. Improper installation, improper use or manipulation can lead to serious injuries to persons!
- Emergency stop control components must not be bypassed, removed or otherwise rendered ineffective!
- Disconnect the system and device from the power supply before starting installation!
- Before commissioning the machine or system for the first time, check the emergency stop control component for correct installation and function by test actuation.
- Emergency stop control components with visible damage must be replaced immediately.
- The emergency stop function must not be used as a substitute for protective measures or other safety functions.
- The emergency stop function must not impair the effectiveness of safety features or of devices with other safety functions.

2. General description and intended use
Emergency stop control components are electromechanical switching devices for the protection of personnel. They are used for quick shutdown to bring machines, vehicles and systems into a safe condition to avoid or reduce hazards and damage to people and machines.
The following regulations apply in particular to commissioning, use and technical inspections:
- The Machinery Directive 2006/42/EC
- The safety regulations as well as
- The accident prevention regulations / safety rules

Manufacturers and users of machinery on which emergency stop control components are used assume responsibility for the observance of the operating manual, as well as for the observance of the safety rules and regulations applicable to them. For the installation and operation of emergency stop control components, the following requirements must be observed and a hazard assessment carried out for the intended use:
- EN ISO 13849-1
- EN ISO 13850
- EN ISO 13849-2
- EN 60204-1/A1
- EN 60947-5-5

3. Product description
Structure: The emergency stop control components consist of a combination of actuators with one or more switching elements. The emergency stop control components are available as a built-in version or installed in a housing. Actuation takes place by pressing, unlocking takes place depending on the type either by:
- Rotation to the right or both directions (depending on the variant)
- Pulling against the actuating direction

„Active/Inactive" types:
- „Active": illuminated, red, emergency stop function active
- „Inactive": non-illuminated, transparent, no emergency stop function

Types with a key lock:
- Unlocking is performed by turning the key to the right after actuating the emergency stop control component. The key must be removed in every actuation state and should only be in the actuator during unlocking. This helps to avoid injuries to the hands.

FRANÇAIS (FR)

Mode d'emploi auxiliaires de commande
d'ARRÊT D'URGENCE

Série
RAFIX 16, RAFIX 22 FS⁺, RAFIX 22 FSR, RAFIX 22 QR

1. Consignes de sécurité
- Lire la notice d'utilisation attentivement avant la mise en service.
- Les auxiliaires de commande d'arrêt d'urgence ont une fonction de protection des personnes. Un montage incorrect, une application ou des manipulations non conformes peuvent occasionner des graves blessures aux personnes !
- Les auxiliaires de commande d'arrêt d'urgence ne doivent pas être contournés, retirés ou rendus inefficaces de toute autre façon !
- Avant de commencer l'installation, mettre l'installation et l'appareil hors tension !
- Avant la première mise en service de la machine ou de l'installation, vérifier que l'auxiliaire de commande d'arrêt d'urgence est monté et fonctionne correctement.
- Les auxiliaires de commande d'arrêt d'urgence présentant des dommages visibles doivent être remplacés sans délai.
- La fonction d'arrêt d'urgence ne doit pas servir de substitut aux mesures de protection ou autres fonctions de sécurité.
- La fonction d'arrêt d'urgence ne doit pas entraver l'efficacité des dispositifs de protection ou dispositifs assurant d'autres fonctions de sécurité.

2. Description générale et utilisation conforme
Les auxiliaires de commande d'arrêt d'urgence sont des appareils de commutation électromécaniques de protection des personnes. Ils servent à la mise l'arrêt rapide pour mettre les machines, véhicules et installations dans un état sûr, afin d'éviter ou réduire dangers et dommages pour les gens et la machine.
Les prescriptions suivantes s'appliquent tout particulièrement pour la mise en service, l'utilisation et les vérifications techniques :
- La directive machine 2006/42/CE
- Les prescriptions de sécurité et
- Les prescriptions de prévention des accidents / règles de sécurité

Le constructeur et l'utilisateur de machines sur lesquelles des auxiliaires de commande d'arrêt d'urgence sont mis en œuvre assument la responsabilité du respect de la notice d'utilisation ainsi que des prescriptions et règles de sécurité qui s'appliquent à eux. Pour le montage et l'exploitation d'auxiliaires de commande d'arrêt d'urgence, les exigences suivantes doivent être respectées et une évaluation des risques doit être menée pour une utilisation conforme :
- EN ISO 13849-1
- EN ISO 13850
- EN ISO 13849-2
- EN 60204-1/A1
- EN 60947-5-5

3. Description du produit
Structure : les auxiliaires de commande d'arrêt d'urgence sont une combinaison d'actionneurs avec un ou plusieurs éléments de commutation. Les auxiliaires de commande d'arrêt d'urgence existent en version encastrable ou montés dans un boîtier. L'actionnement est réalisé par pression, le déverrouillage selon la variante par :
- Mouvement de rotation vers la droite ou dans les deux sens (selon la variante)
- Tirage dans le sens contraire de l'actionnement

Variantes « actif/inactif » :
- « Actif » : éclairé, rouge, fonction d'arrêt d'urgence présente
- « Inactif » : non éclairé, transparent, aucune fonction d'arrêt d'urgence

Variantes avec serrure :
- Le déverrouillage est réalisé par rotation à droite de la clé après actionnement de l'auxiliaire de commande d'arrêt d'urgence. La clé doit pouvoir être retirée dans n'importe quel état d'actionnement et ne doit se trouver dans l'actionneur que pendant le déverrouillage. Ceci permet d'éviter les blessures aux mains.

Produkt Product Produit	Einbau Ø mm Mounting Ø mm Montage Ø mm	Betätiger Actuator Actionneur	Schaltelement Contact Block Élément de commutation
RAFIX 16	Ø 16.2	1.30.074.xxx/xxxx 9.30.074.xxx/xxxx	1.20.123.xxx/xxxx 9.20.123.xxx/xxxx
RAFIX 16 F	□ 22.3 Ø 22.3	1.30.094.xxx/xxxx 9.30.094.xxx/xxxx	
RAFIX 22 QR	Ø 22.3	1.30.243.xxx/xxxx 9.30.243.xxx/xxxx	1.20.124.xxx/xxxx 1.20.125.xxx/xxxx 5.00.100.xxx/xxxx 9.20.124.xxx/xxxx 9.20.125.xxx/xxxx
RAFIX 22 FS	Ø 22.3	1.30.253.xxx/xxxx 9.30.253.xxx/xxxx	1.20.126.xxx/xxxx 1.20.146.xxx/xxxx 9.20.126.xxx/xxxx 9.20.146.xxx/xxxx
RAFIX 22 FS⁺	Ø 22.3	1.30.273.xxx/xxxx 9.30.273.xxx/xxxx	
RAFIX 22 FSR	Ø 22.3	1.30.283.xxx/xxxx 9.30.283.xxx/xxxx	

Tabelle 3.1 Weitere technische Daten sind dem eCatalog zu entnehmen: ecatalog.rafi-group.com
Table 3.1 Further technical data can be found in the eCatalog: ecatalog.rafi-group.com
Tableau 3.1 Vous trouverez d'autres données techniques dans le eCatalog : ecatalog.rafi-group.com

The information in this data sheet only contains general descriptions and / or performance features, which may not apply precisely as described to the respective application, and which my change due to further product enhancements. The technical data, illustrations and other information about our products are the mere results of individual technical testing. These descriptions and other product features are only binding if they expressly agreed upon at the time of the conclusion of a binding contract. In all other cases, we reserve the right to make technical changes as well as changes of availability. Pictures and other graphic illustrations are approximations only. All product names may be trademarks or brand names of the RAFI Group or any other sub-supplier of RAFI. The use of such by any third parties for their own purposes may infringe the rights of the respective entity holding those rights.

RAFI GmbH & Co. KG

Ravensburger Str. 128-134
88276 Berg / Ravensburg
Germany
www.rafi-group.com,
info.headquarters@rafi-group.com