IM-P504-18
CH Issue 2

spirax sarco

IP2M, IP2AM and IP2DM Monnier International Compressed Air Filter / Regulators

Installation and Maintenance Instructions



1. Safety information
2. General product information
3. Installation and commissioning
4. Operation
5. Spare parts and Maintenance

© Copyright 2012
Printed in the USA

1. Safety information

Safe operation of these products can only be guaranteed if they are properly installed, commissioned, used and maintained by qualified personnel (see Section 1.11) in compliance with the operating instructions. General installation and safety instructions for pipeline and plant construction, as well as the proper use of tools and safety equipment must also be complied with.

1.1 Intended use

Referring to the Installation and Maintenance Instructions, name-plate and Technical Information Sheet, check that the product is suitable for the intended use/application. The products comply with the requirements of the European Pressure Equipment Directive 97/23/EC and fall within the category 'SEP'. It should be noted that products within this category are required by the Directive not to carry the CE mark.

i) The products have been specifically designed for use on compressed air, which is in Group 2 of the above mentioned Pressure Equipment Directive. The products' use on other fluids may be possible but, if this is contemplated, Spirax Sarco should be contacted to confirm the suitability of the product for the application being considered.

ii) Check material suitability, pressure and temperature and their maximum and minimum values. If the maximum operating limits of the product are lower than those of the system in which it is being fitted, or if malfunction of the product could result in a dangerous overpressure or overtemperature occurrence, ensure a safety device is included in the system to prevent such over-limit situations.

iii) Determine the correct installation situation and direction of fluid flow.

iv) Spirax Sarco products are not intended to withstand external stresses that may be induced by any system to which they are fitted. It is the responsibility of the installer to consider these stresses and take adequate precautions to minimise them.

v) Remove protection covers from all connections and protective film from all name-plates, where appropriate, before installation on steam or other high temperature applications.

1.2 Access

Ensure safe access and if necessary a safe working platform (suitably guarded) before attempting to work on the product. Arrange suitable lifting gear if required.

1.3 Lighting

Ensure adequate lighting, particularly where detailed or intricate work is required.

1.4 Hazardous liquids or gases in the pipeline

Consider what is in the pipeline or what may have been in the pipeline at some previous time. Consider: flammable materials, substances hazardous to health, extremes of temperature.

1.5 Hazardous environment around the product

Consider: explosion risk areas, lack of oxygen (e.g. tanks, pits), dangerous gases, extremes of temperature, hot surfaces, fire hazard (e.g. during welding), excessive noise, moving machinery.

1.6 The system

Consider the effect on the complete system of the work proposed. Will any proposed action (e.g. closing isolation valves, electrical isolation) put any other part of the system or any personnel at risk?
Dangers might include isolation of vents or protective devices or the rendering ineffective of controls or alarms. Ensure isolation valves are turned on and off in a gradual way to avoid system shocks.

1.7 Pressure systems

Ensure that any pressure is isolated and safely vented to atmospheric pressure. Consider double isolation (double block and bleed) and the locking or labelling of closed valves. Do not assume that the system has depressurised even when the pressure gauge indicates zero.

1.8 Temperature

Allow time for temperature to normalise after isolation to avoid danger of burns.

1.9 Tools and consumables

Before starting work ensure that you have suitable tools and/or consumables available. Use only genuine Spirax Sarco replacement parts.

1.10 Protective clothing

Consider whether you and/or others in the vicinity require any protective clothing to protect against the hazards of, for example, chemicals, high/low temperature, radiation, noise, falling objects, and dangers to eyes and face.

1.11 Permits to work

All work must be carried out or be supervised by a suitably competent person. Installation and operating personnel should be trained in the correct use of the product according to the Installation and Maintenance Instructions.
Where a formal 'permit to work' system is in force it must be complied with. Where there is no such system, it is recommended that a responsible person should know what work is going on and, where necessary, arrange to have an assistant whose primary responsibility is safety.
Post 'warning notices' if necessary.

1.12 Handling

Manual handling of large and/or heavy products may present a risk of injury. Lifting, pushing, pulling, carrying or supporting a load by bodily force can cause injury particularly to the back. You are advised to assess the risks taking into account the task, the individual, the load and the working environment and use the appropriate handling method depending on the circumstances of the work being done.

1.13 Residual hazards

In normal use the external surface of the product may be very hot. If used at the maximum permitted operating conditions the surface temperature of some products may reach temperatures of 90°C (194°F).
Many products are not self-draining. Take due care when dismantling or removing the product from an installation (refer to 'Maintenance instructions').

1.14 Freezing

Provision must be made to protect products which are not self-draining against frost damage in environments where they may be exposed to temperatures below freezing point.

1.15 Disposal

Unless otherwise stated in the Installation and Maintenance Instructions, this product is recyclable and no ecological hazard is anticipated with its disposal providing due care is taken.

1.16 Returning products

Customers and stockists are reminded that under EC Health, Safety and Environment Law, when returning products to Spirax Sarco they must provide information on any hazards and the precautions to be taken due to contamination residues or mechanical damage which may present a health, safety or environmental risk. This information must be provided in writing including Health and Safety data sheets relating to any substances identified as hazardous or potentially hazardous.

2. General product information

2.1 General description

The IP_M range of Monnier international compressed air filter/regulators provide high quality compressed air with accurate pressure control for general purpose pneumatic systems.

Principal features:

- Internal and external black anodised finish.
- Compact combined filter/regulator.
- Shrouded whirl disc for efficient separation.
- Option of sight level on metal bowled units.
- 5 micron large surface area element.
- Good flow and regulation characteristics.
- For line, bracket or panel mounting.
- Easy fit stainless steel bowl guard available.

Available types:

IP2M	Having a manual drain (metal bowl only).
IP2AM	Having a pilot operated automatic drain.
IP2DM	Having a semi-auto dump valve.

Note: The IP2_M Monnier are supplied self-relieving as standard (the non-relieving version is available on request).

Optional extras

For further data regarding the following options see Technical Information sheet TI-P504-17:

- Tamper-proof cap.
- Type 21 mounting bracket.
- Pressure gauges.
- Discharge tube adaptor - IP2AM only.
- Metal bowl.
- Bowl guard.

2.2 Sizes and pipe connections

¼", ⅜" and ½" screwed BSP (BS 21 - Rp).

2.3 Spring range (operating pressure range)

All regulators can be adjusted to zero pressure, or above the figures shown. The operating range is marked on the unit.

Standard spring	0.5 - 10 bar g	(7.2 - 145 psi g)
Optional spring	0.2 - 3.5 bar g	(2.9 - 50.7 psi g)

Note: The IP_M Monnier range will be supplied with the standard spring unless an alternative option has been specified when placing an order.

2.4 Operating limits

Maximum working pressure	Polycarbonate bowl	10 bar g @ 50°C (145 psi g @ 122°F)
	Metal bowl	17 bar g @ 80°C (246.5 psi g @ 176°F)
	Metal bowl with sight level	17 bar g @ 70°C (246.5 psi g @ 158°F)
Maximum working temperature	Polycarbonate bowl	50°C @ 10 bar g (122°F @ 145 psi g)
	Metal bowl	80°C @ 17 bar g (176°F @ 246.5 psi g)
	Metal bowl with sight level	70°C @ 17 bar g (158°F @ 246.5 psi g)

2.5 Materials

Part	Material
Body	Machined aluminium (anodised)
Valve	Brass rubber faced
Bowl	Polycarbonate or aluminium (anodised)
Element (5 µm)	Melamine impregnated cellulose
Diaphragm	Reinforced nitrile rubber



Fig. 1 IP_M Monnier international compressed air filter / regulator

3. Installation and commissioning

Note: Before actioning any installation observe the 'Safety information' in Section 1.

Referring to the Installation and Maintenance Instructions, name-plate and Technical Information Sheet, check that the product is suitable for the intended installation.

3.1 Specific product safety information

Polycarbonate bowls may be attacked by phosphate ester based fluids, solvents, chemical cleaners, carbon tetrachloride, etc. These and any other substances should not be allowed to come into contact with this component. Certain compressor lubricating oils also contain additives harmful to polycarbonate. Where there is any doubt we recommend, in the interests of personal safety, that bowl guards or metal bowls be fitted.

3.2 General information

Dimensions / weights (approximate) in mm and kg

Polycarbonate bowl

Unit	A	B	C	E	E1	Weights IP_M	Weights IP_M + bowl guard
IP2AM	95	165	64	39	82	0.730	0.808
IP2DM	95	165	64	39	79	0.730	0.808

Metal bowl

Unit	A	B	C	E	Weight
IP2M	82	143	76	39	0.913
IP2AM	82	152	76	39	0.913
IP2DM	82	145	76	39	0.913

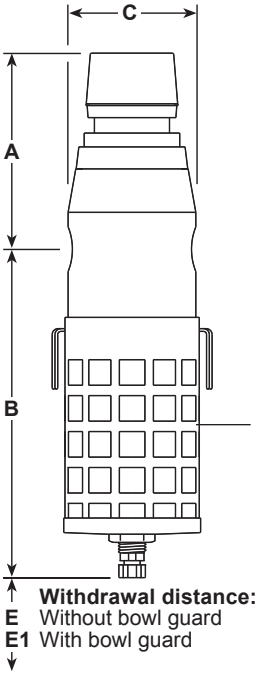

Fig. 2

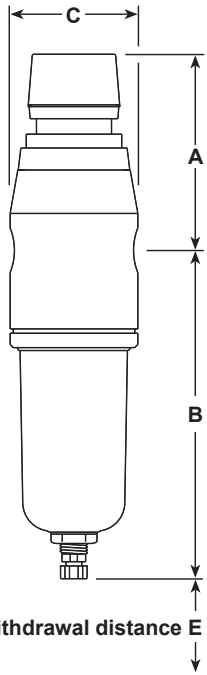

Fig. 3

Optional extras

Tamper-proof cap
An aluminium tamper-proof cap can be fitted to prevent unauthorised pressure adjustment.

Dimensions (approximate) in mm

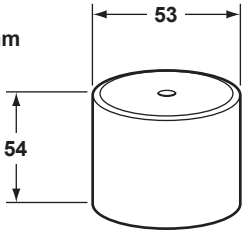

Fig. 4

Type 21 mounting bracket
A plated mild steel bracket which can be attached to the filter/regulator by the plastic mounting ring supplied.
Note: An aluminium mounting ring can be supplied at extra cost, and must be specified, if required, on order placement.

Dimensions (approximate) in mm

A	B	C	D	E
44	19	32	12	6

If the regulator is to be panel mounted a hole is required in the panel 48 mm diameter, and the panel thickness must not exceed 8 mm.

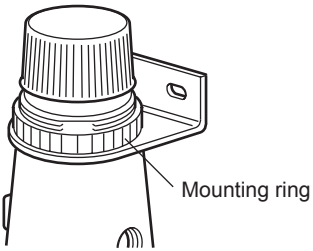

Fig. 5

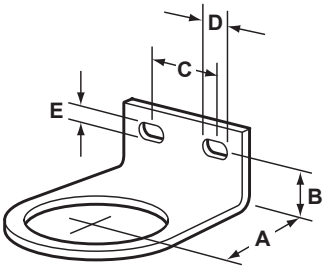

Pressure gauge
Available in two sizes, with 4 pressure ranges. The face is marked in both bar and psi. Please state, size and pressure range when placing an order.

Pressure ranges	0 to 2 bar	0 to 30 psi
	0 to 7 bar	0 to 100 psi
	0 to 11 bar	0 to 160 psi
	0 to 20 bar	0 to 300 psi (2" size only)

Dimensions (approximate) in mm

Size	A	B	C
1½"	40	47	R⅛"
2"	49	45	R⅛"

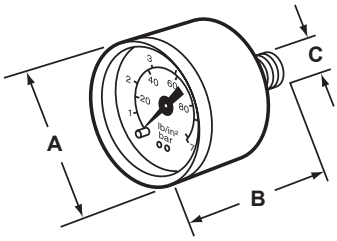

Fig. 6

Optional extras (continued)

Pressure gauges for panel mounting
With chromium plated bezel available in two ranges, the face being marked in bar and psi as follows:-

Pressure ranges	0 to 2 bar	0 to 30 psi
	0 to 11 bar	0 to 160 psi

Dimensions (approximate) in mm

A	B	C	D
53	56	48	R⅛

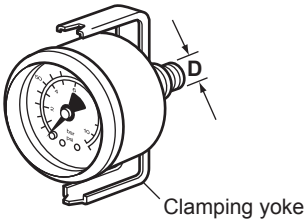

Fig. 7

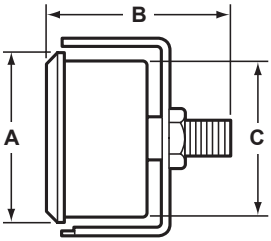

Discharge tube adaptor IP2AM only
An adaptor can be supplied for the auto-drain on the IP2AM models, to accept 8 mm O/D copper or plastic tube.

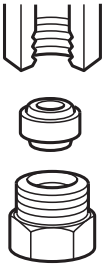

Fig. 8

Metal bowl
with sight level



Fig. 9

Bowl guard
In the interest of safety Spirax Sarco recommend that a bowl guard should be fitted to polycarbonate bowls - see Section 3.1.



Fig. 10

3.3 Installation

3.3.1 The unit should be fitted in horizontal pipework with the bowl vertically downwards.

3.3.2 Adequate space should be provided around the unit to allow easy access for routine servicing requirements (see Figures 2 and 3 for withdrawal distances).

3.3.3 Connect the unit so that the airflow is in the direction indicated by the arrow on the body.

3.3.4 The unit should be installed as close as possible to the equipment it is serving.

3.3.5 A pressure gauge can be connected to one of the ⅛" ports. The gauge should be selected to cover the maximum pressure range of the main control spring. The gauge will indicate the downstream or controlled pressure.

3.3.6 Ensure that the control spring range selected for the regulator fully meets the pressure requirements of the system.

3.3.7 Do not overload the filter cartridge (see Section 4 - Operating principals) or there will be a reduction in its efficiency and / or life. On heavily contaminated systems, it is advisable to fit a conventional pneumatic filter (Monnier International or Miniature) immediately in front of the unit for maximum efficiency and life cycle.

3.3.8 The polycarbonate bowl may be fitted with a bowl guard.

3.4 Commissioning

How to adjust the IR1M:

- Lift the adjustment knob (**1**) to unlock.
- Turn the adjustment knob (**1**) clockwise to increase secondary pressure, or anticlockwise to decrease.
- Push down the adjustment knob (**1**) to relock the unit.
- It is recommended that adjustments are made under flow conditions - there may be a slight increase in set pressure when the flow stops.

4. Operation

4.1 Principle of operation

With system pressure on, the regulator poppet valve assembly is in the closed position when the adjusting knob is turned fully counter clockwise (no spring load). By turning the adjusting knob clockwise, the diaphragm / piston moves downward allowing filtered air to flow in through the orifice created between the poppet assembly and seat.

Auto-drain - IP2AM

The Monnier internal auto-drain is a pilot operated unit. As the water level in the bowl rises, the float (**13**) lifts, allowing line pressure to act on a piston, which opens the main discharge valve. As the liquid level falls, the float closes and line pressure shuts the main valve. Under zero pressure conditions, the automatic drain will be in the open position, allowing any liquid to drain away.

Automatic dump valve - IP2DM

This is a spring loaded valve which will allow the filter / regulator
to automatically drain when the pressure in the bowl drops below 0.06 bar (i.e. when air to the plant is shut off).
The units can also be drained manually by pushing the protrouding valve stem sideways or upwards.

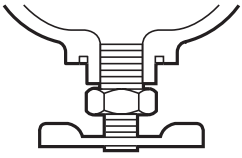

IP2M
(having a metal bowl)

Fig. 11

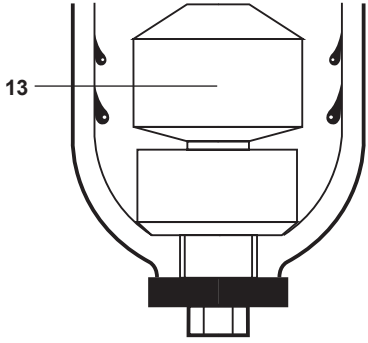

IP2AM

Fig. 12

IP2DM

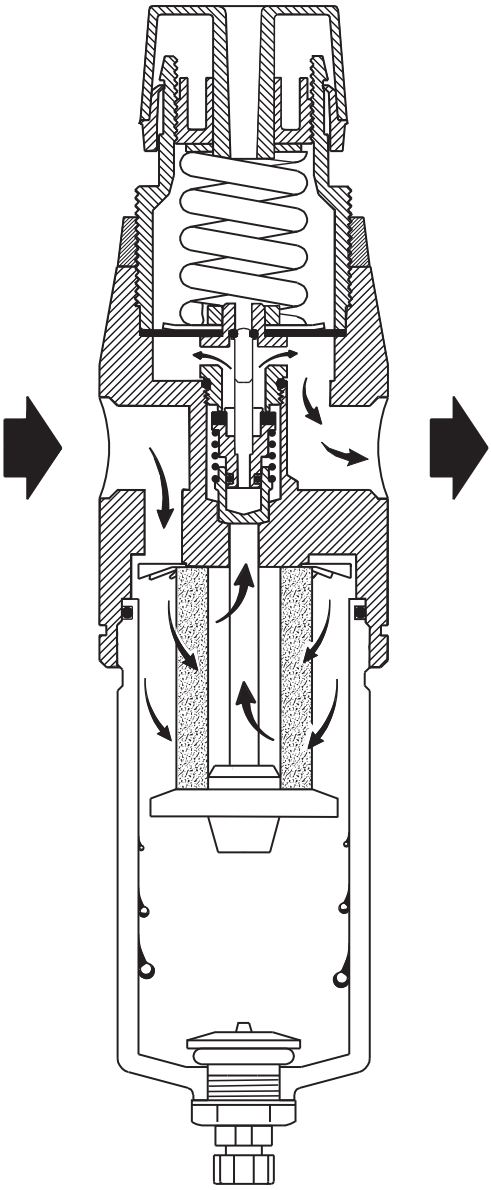

Fig. 13

4.2 Performance selection

(with primary pressure 10 bar)

For any specified primary filtration pressure, there is a maximum recommended air flowrate. Keeping within this, will ensure that the element performance maintains the stated high efficiency levels, particularly for the removal of oil and water contaminants.

4.3 Capacities

With primary pressure 10 bar and 5 µm element

Key for all charts

- 1.6 bar g (23 psi g)
- 2.5 bar g (36 psi g)
- 4.0 bar g (58 psi g)
- 6.3 bar g (91 psi g)
- 8.0 bar g (116 psi g)

1/4"

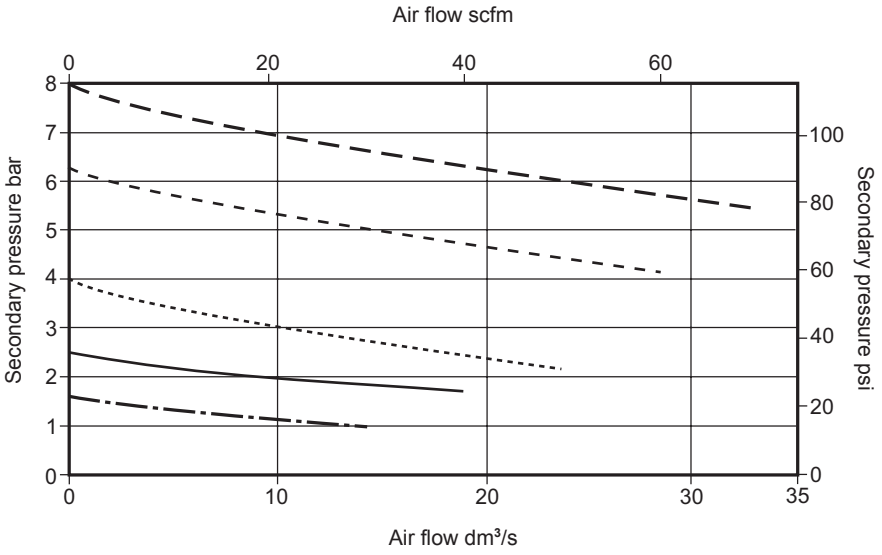

3/8"

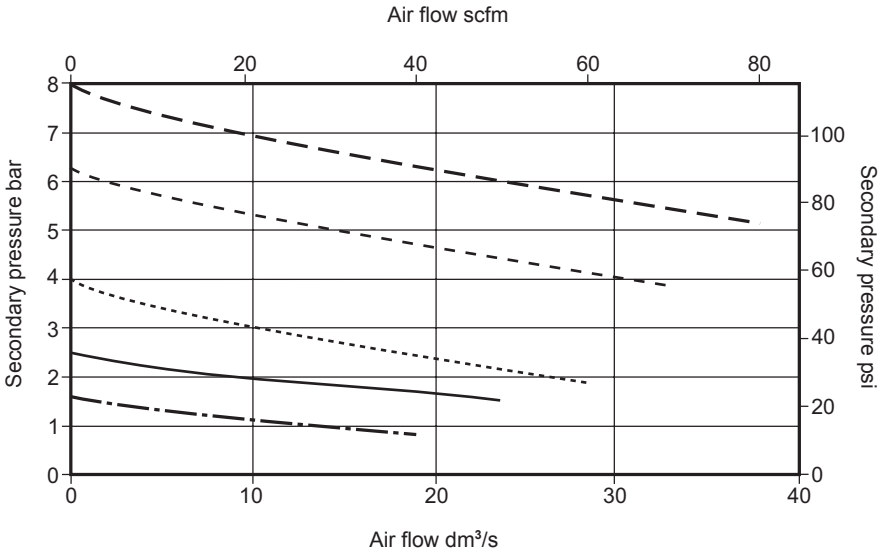
Air flow scfm
0
20
40
60
80
Secondary pressure bar
8
7
6
5
4
3
2
1
0
100
80
60
40
20
0
Secondary pressure psi
0
10
20
30
40
Air flow dm³/s

1/2"

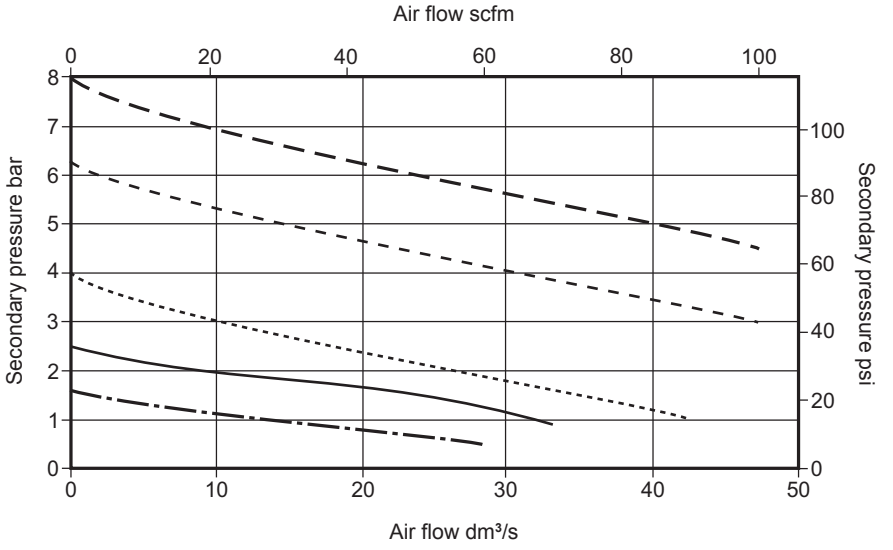
Air flow scfm
0
20
40
60
80
100
Secondary pressure bar
8
7
6
5
4
3
2
1
0
100
80
60
40
20
0
Secondary pressure psi
0
10
20
30
40
50
Air flow dm³/s

5. Spare parts and Maintenance

5.1 Spare parts

The spare parts available are detailed below. No other parts are supplied as spares.

Available spares

Pressure control spring set - State pressure range	**E**
Valve and diaphragm assembly	**F, G**
Bowl assembly including appropriate drain - Polycarbonate (with or without sight level)	**A, B**
Element set (packet of 3 of each) (IP2M, IP2AM and IP2DM only)	**B, C,**
Auto drain (IP2AM only)	**H**

Note: In the interests of safety Spirax Sarco recommend that a bowl guard (an optional extra) should be fitted to polycarbonate bowls.

How to order spares

Always order spares by using the desciption given in the column headed 'Available spares' and state the size and type of unit.

Example: 1 off Pressure control spring set (0.5 - 10 bar) for a ½" IP2M Monnier international compressed air filter / regulator.

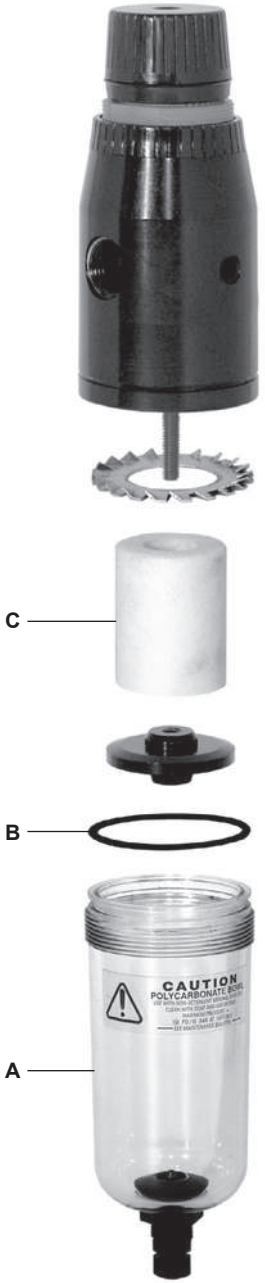

Fig. 15 Spare parts

Metal bowl with sight level

for **IP2M**, **IP2AM** and **IP2DM**



Fig. 14 Spare parts

IP2DM

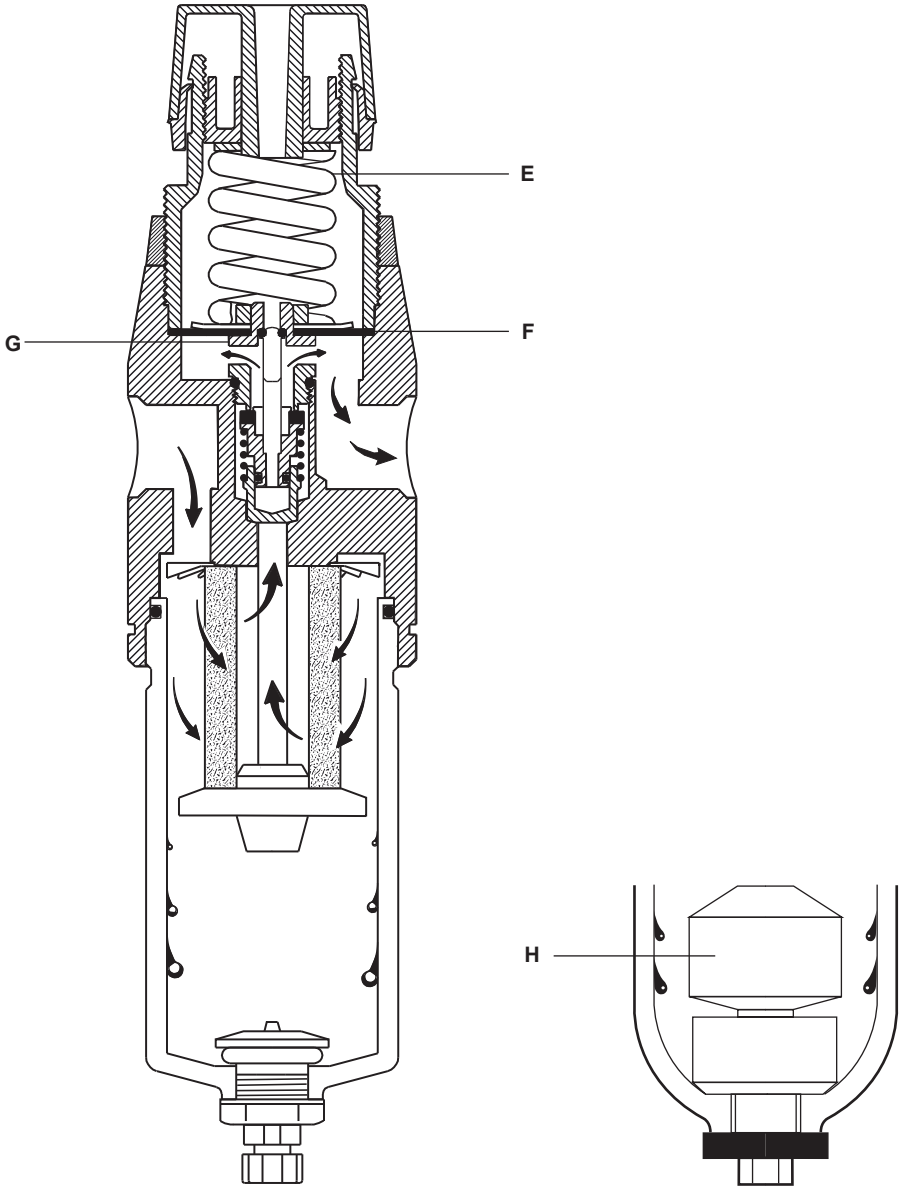

Fig. 16 Spare parts

5.2 Maintenance (no tools required)

How to replace the pressure control assembly:

- Isolate the main air supply.
- Lift the adjustment knob (**1**) to unlock and proceed to rotate the adjustment knob fully anticlockwise until stop is felt, then continue rotating until the knob is free.
- Remove the adjuster nut (**1A**) from inside adjustment knob.
- Remove the control spring (**3**) and spring plate (**3A**).
- Replace using a new control spring (**3**), spring plate (**3A**) and screw in the adjuster nut (**1A**), making sure that the recess is facing upwards, until flush with the regulator body.
- Snap on the adjustment knob being careful to line up the four driving lugs on the locking ring with the corresponding slots in the adjustment knob.
- Reassemble in reverse order.

How to replace valve and diaphragm assembly:

- Isolate the main air supply.
- Rotate the adjustment knob (**1**) fully anticlockwise until stop is felt.
- Release the mounting ring (**1B**).
- Unscrew and remove the complete bonnet assembly from the main body.
- Remove the diaphragm assembly and replace using new 'O' rings. Please note that the diaphragm sealing ring (**4A**) fits on the top of the diaphragm (**4**).
- Reassemble in reverse order using a new element (**6**).
- The bowl (**14**) should be firmly hand tightened.

How to replace the valve and return spring:

- Isolate the main air supply.
- Remove the bowl guard if fitted.
- Release the pressure by lifting the control knob (**1**) and rotating anticlockwise.
- Remove the bowl (**14**) and unscrew the element retaining nut and withdraw the filter assembly (**6**).
- The valve and return spring assembly (**2** and **16**) will now come away.
- Reassemble in reverse order using a new element (**6**).
- The bowl (**14**) should be firmly hand tightened.

How to service the filter:

- Isolate the main air supply.
- Remove the bowl guard if fitted.
- Release the pressure by lifting the control knob (**1**) and rotating anticlockwise.
- Remove the bowl (**14**) and unscrew the element retaining nut and withdraw the filter assembly (**6**).
- Clean the bowl (**14**) using soap and water only (do not use solvents or proprietary cleaners) and wipe dry with a lint free cloth.
- Reassemble in reverse order using a new element (**6**).
- The bowl (**14**) should be firmly hand tightened.

IP2DM

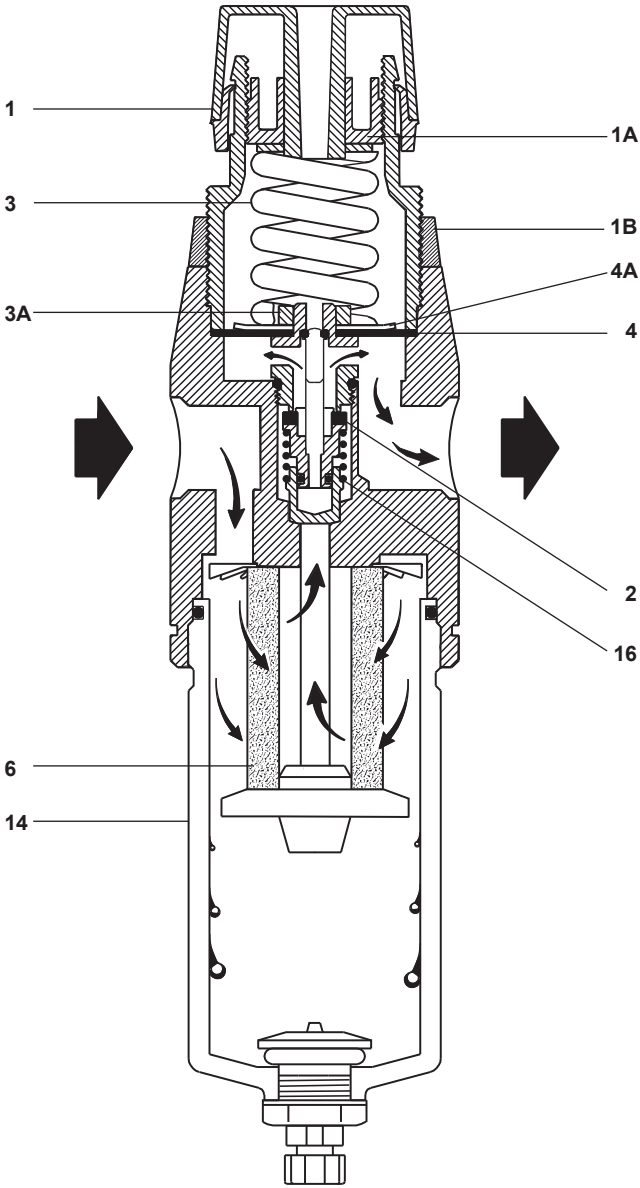

Fig. 17