PN2096
PN-2.5-RER14-MFRKG/US/ /V

Pressure sensors

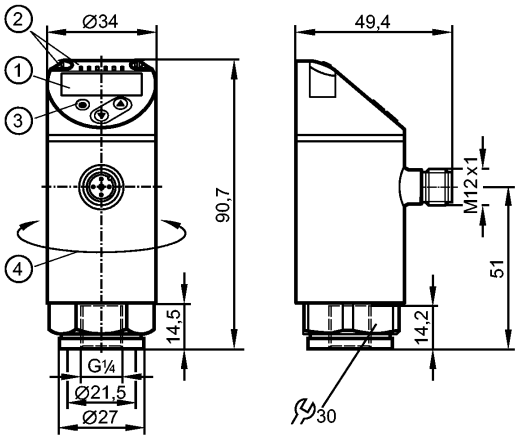

1: 4-digit alphanumeric display / alternating indication of red and green
2: LEDs (display unit / switching status)
3: Programming button
4: Upper part of the housing can be rotated by 345°

Product characteristics

Electronic pressure sensor
M12 connector
Function programmable
Measuring element: ceramic-capacitive pressure measuring cell
Process connection: G ¼ I
2 outputs OUT1 = switching output OUT2 = switching output or analogue output
4-digit alphanumeric display / alternating indication of red and green
Measuring range: -0.125...2.5 bar / -1.8...36.25 psi / -12.5...250 kPa

Application

Application		Type of pressure: relative pressure Group 2 fluids according to the Pressure Equipment Directive (PED), group 1 fluids on request		
Pressure rating		20 bar	290 psi	2000 kPa
Bursting pressure min.		50 bar	725 psi	5000 kPa
Vacuum resistance	[mbar]	-1000		
Medium temperature	[°C]	-25...80		

Electrical data

Electrical design		DC PNP/NPN
Operating voltage	[V]	18...30 DC [1])
Current consumption	[mA]	< 35
Insulation resistance	[MΩ]	> 100 (500 V DC)
Protection class		III
Reverse polarity protection		yes

Outputs

Output		2 outputs OUT1 = switching output OUT2 = switching output or analogue output
Output function		2 x normally open / closed programmable or 1 x normally open / closed programmable + 1 x analogue (4...20 mA / 0...10 V; scaleable 1:5)
Current rating	[mA]	250
Voltage drop	[V]	< 2
Short-circuit protection		pulsed

PN2096 - Electronic pressure sensor - eclass: 27201302 / 27-20-13-02

Overload protection		yes		
Switching frequency	[Hz]	≤ 500		
Analogue output		4...20 mA; 0...10 V		
Max. load	[Ω]	4...20 mA: max. 500		
Min. load resistance	[Ω]	0...10 V: min. 2000		
Measuring / setting range				
Measuring range		-0.125...2.5 bar	-1.8...36.25 psi	-12.5...250 kPa
Setting range				
Set point, SP		-0.11...2.5 bar	-1.6...36.25 psi	-11...250 kPa
Reset point, rP		-0.12...2.49 bar	-1.75...36.1 psi	-12...249 kPa
Analogue start point, ASP		-0.125...2.0 bar	-1.8...29.0 psi	-12.5...200 kPa
Analogue end point, AEP		0.375...2.5 bar	5.45...36.25 psi	37.5...250 kPa
in steps of		0.005 bar	0.05 psi	0.5 kPa
Accuracy / deviations				
Accuracy / deviations (in % of the span) Turn down 1:1				
Switch point accuracy		< ± 0.4		
Characteristics deviation *)		< ± 0.25 (BFSL) / < ± 0.5 (LS)		
Hysteresis		< ± 0.1		
Repeatability **)		< ± 0.1		
Long-term stability ***)		< ± 0.05		
Temperature coefficients (TEMPCO) in the temperature range -25...80° C (in % of the span per 10 K)				
Greatest TEMPCO of the zero point		0.2		
Greatest TEMPCO of the span		0.2		
Reaction times				
Power-on delay time	[s]	0.3		
Min. response time switching output	[ms]	< 1.5		
Delay time programmable dS, dr	[s]	0...50		
Damping for the switching output (dAP)	[s]	0...4		
Damping for the analogue output (dAA)	[s]	0...4		
Response time analogue output	[ms]	< 3		
Integrated watchdog		yes		
Software / programming				
Programming options		hysteresis / window function; NO / NC; on delay, off delay; damping; display unit; current/ voltage output		
Interfaces				
IO-Link device				
Transfer type		COM2		
IO-Link revision		1.1		
SDCI standard		IEC 61131-9		
IO-Link device ID		464 d / 00 01 d0 h		
Profiles		Smart Sensor: Process Data Variable; Device Identification, Device Diagnosis		
SIO mode		yes		
Required master port class		A		
Process data analogue		1		
Process data binary		2		
Min. process cycle time	[ms]	2.3		
Environment				
Ambient temperature	[°C]	-25...80		
Storage temperature	[°C]	-40...100		
Protection		IP 65 / IP 67		
Tests / approvals				
Pressure equipment directive		97/23/EG: Sound engineering practice		
EMC		DIN EN 61000-6-2 DIN EN 61000-6-3		

PN2096 - Electronic pressure sensor - eclass: 27201302 / 27-20-13-02

Shock resistance		DIN EN 60068-2-27	50 g (11 ms)
Vibration resistance		DIN EN 60068-2-6	20 g (10...2000 Hz)
MTTF	[Years]	138	
UL approval number		J012	
Mechanical data			
Process connection		G ¼ I	
Materials (wetted parts)		stainless steel (316L / 1.4404); Al2O3 (ceramics); FKM	
Housing materials		stainless steel (316L / 1.4404); PBT+PC-GF 30; PBT-GF 20; PC	
Min. pressure cycles		100 million	
Tightening torque	[Nm]	25...35 (recommended tightening torque²)	
Restrictor element integrated		no (can be retrofitted)	
Weight	[kg]	0.237	
Displays / operating elements			
Display		Display unit	3 x LED green (bar, psi, kPa)
		Switching status	2 x LED yellow
			4-digit alphanumeric display / alternating indication
		Measured values of red and green	
Electrical connection			
Connection		M12 connector; Gold-plated contacts	

Wiring

Core colours

BK black
BN brown
BU blue
WH white



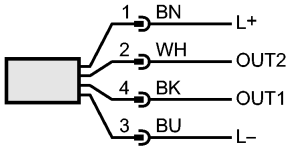

OUT1: switching output or IO-Link
OUT2: switching output or 4...20 mA / 0...10 V
Colours to DIN EN 60947-5-2

Remarks

Remarks

*) BFSL = Best Fit Straight Line / LS = Limit Value Setting
**) with temperature fluctuations < 10 K
***) in% of the span / 6 months
¹) to EN50178, SELV, PELV
²) Depends on lubrication, seal and pressure rating

Pack quantity	[piece]	1