TIMKEN

The Timken Company
4500 Mt Pleasant St. NW
N. Canton, OH 44720
Phone: (234) 262-3000
E-Mail: CustomerCAD@timken.com • **Web site:** www.timken.com

Timken Part Number L44649 - L44610, Tapered Roller Bearings - TS (Tapered Single) Imperial

This is the most basic and most widely used type of tapered roller bearing. It consists of two main separable parts: the cone (inner ring) assembly and the cup (outer ring). It is typically mounted in opposing pairs on a shaft.



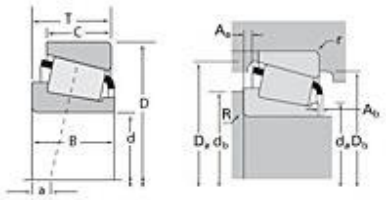

Specifications | Dimensions | Abutment and Fillet Dimensions | Basic Load Ratings | Factors

Specifications

Series	L44600
Cone Part Number	L44649
Cup Part Number	L44610
Design Units	Imperial
Bearing Weight	0.30 lb 0.100 Kg
Cage Type	Stamped Steel

Dimensions

d - Bore	1.0625 in 26.988 mm
D - Cup Outer Diameter	1.9800 in 50.292 mm

B - Cone Width	0.5800 in 14.732 mm
C - Cup Width	0.4200 in 10.668 mm
T - Bearing Width	0.5600 in 14.224 mm

Abutment and Fillet Dimensions

R - Cone Backface "To Clear" Radius[1]	0.14 in 3.560 mm
r - Cup Backface "To Clear" Radius[2]	0.050 in 1.27 mm
da - Cone Frontface Backing Diameter	1.22 in 30.99 mm
db - Cone Backface Backing Diameter	1.48 in 37.59 mm
Da - Cup Frontface Backing Diameter	1.87 in 47.50 mm
Db - Cup Backface Backing Diameter	1.75 in 44.45 mm
Ab - Cage-Cone Frontface Clearance	0.05 in 1.3 mm
Aa - Cage-Cone Backface Clearance	0.02 in 0.5 mm
a - Effective Center Location[3]	-0.13 in -3.30 mm

Basic Load Ratings

C90 - Dynamic Radial Rating (90 million revolutions)[4]	2080 lbf 9230 N
C1 - Dynamic Radial Rating (1 million revolutions)[5]	8010 lbf 35600 N
C0 - Static Radial Rating	7400 lbf 32900 N
C_{a90} - Dynamic Thrust Rating (90 million revolutions)[6]	1330 lbf 5910 N

Factors

K - Factor[7]	1.56
e - ISO Factor[8]	0.37
Y - ISO Factor[9]	1.6
G1 - Heat Generation Factor (Roller-Raceway)	8.9
G2 - Heat Generation Factor (Rib-Roller End)	8.93
Cg - Geometry Factor	0.0526

[1] These maximum fillet radii will be cleared by the bearing corners.
[2] These maximum fillet radii will be cleared by the bearing corners.
[3] Negative value indicates effective center inside cone backface.
[4] Based on 90 x 10^6 revolutions L_{10} life, for The Timken Company life calculation method. C_{90} and C_{a90} are radial and thrust values.
[5] Based on 1 x 10^6 revolutions L_{10} life, for the ISO life calculation method.
[6] Based on 90 x 10^6 revolutions L_{10} life, for The Timken Company life calculation method. C_{90} and C_{a90} are radial and thrust values for a single-row, $C_{90(2)}$ is the two-row radial value.
[7] These factors apply for both inch and metric calculations. Consult your Timken representative for instruction on use.
[8] These factors apply for both inch and metric calculations. Consult your Timken representative for instruction on use.
[9] These factors apply for both inch and metric calculations. Consult your Timken representative for instruction on use.

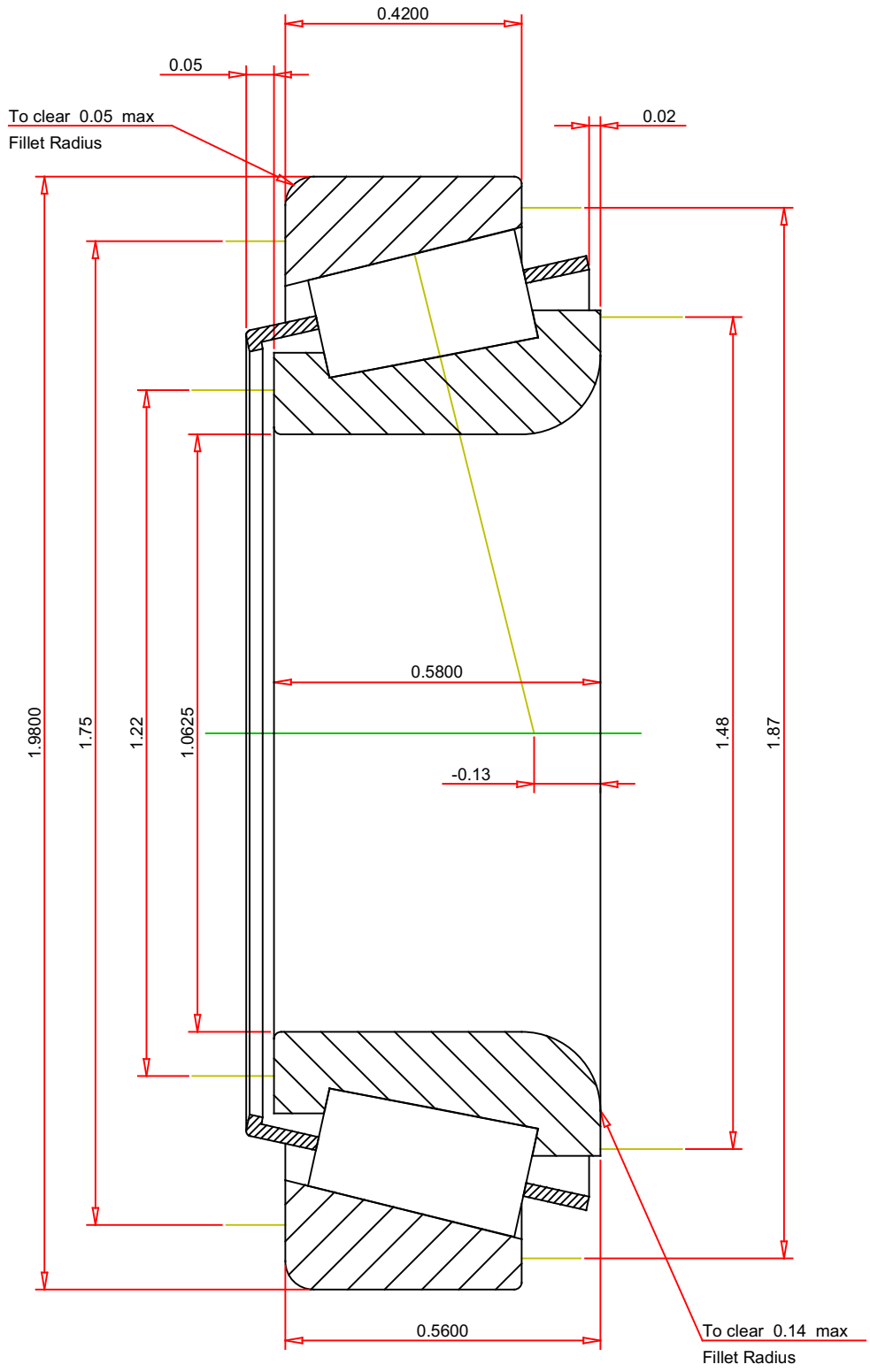

IMPERIAL UNITS

ISO Factor - e	0.37	
ISO Factor - Y	1.6	
Bearing Weight	0.3	lb
Number of Rollers Per Row	19	
Effective Center Location	-0.13	inch

TIMKEN®

THE TIMKEN COMPANY
NORTH CANTON, OHIO USA

L44649 - L44610
TS BEARING ASSEMBLY

K Factor	1.56	
Dynamic Radial Rating - C90	2080	lbf
Dynamic Thrust Rating - Ca90	1330	lbf
Static Radial Rating - C0	7400	lbf
Dynamic Radial Rating - C1	8010	lbf

Every reasonable effort has been made to ensure the accuracy of the information contained in this writing, but no liability is accepted for errors, omissions or for any other reason.

FOR DISCUSSION ONLY