E30058

Screw-in adapter for process sensors

ADAPT 1/4 NPT A-G1/4 A

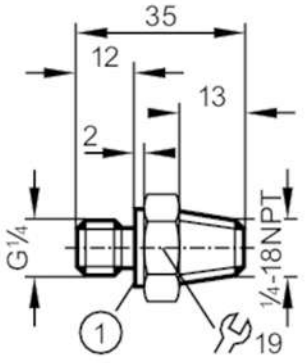

1 sealing edge

CRN

Application		
Pressure rating	[bar]	800
Tests / approvals		
Pressure Equipment Directive		A possible classification to PED depends on the application and has to be carried out by the user / operator.
Pressure Equipment Directive EAC		The adapter is intended for use in devices, machines and installations that do not fall under the categories of the technical rule TR CU 032/2013.
Safety instructions		The compatibility between medium and product material has to be checked in all applications.
Mechanical data		
Weight	[g]	41.3
Materials		stainless steel (1.4571/316Ti)
Sensor connection		G 1/4
Process connection		threaded connection 1/4" NPT
Remarks		
Pack quantity		1 pcs.