O8T200

Diffuse reflection sensor

O8T-FPKG/IO-Link/2,0M

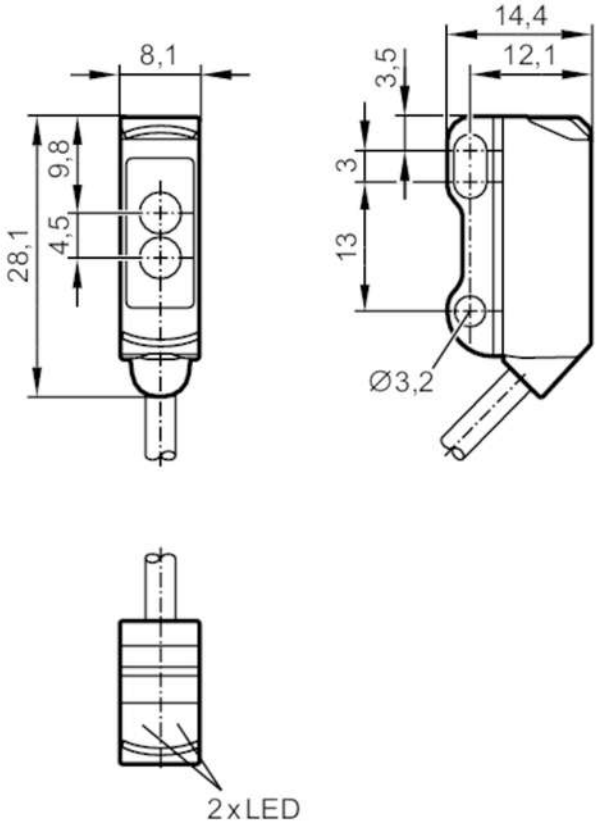

receiver in upper lens
transmitter in lower lens

Product characteristics		
Type of light		red light
Housing		rectangular
Application		
Function principle		Diffuse reflection sensor
Electrical data		
Operating voltage	[V]	10...30 DC
Current consumption	[mA]	20; ((24 V))
Protection class		III
Reverse polarity protection		yes
Type of light		red light
Wave length	[nm]	633
Outputs		
Electrical design		PNP
Output function		light-on/dark-on mode; (programmable)
Max. voltage drop switching output DC	[V]	2.5

O8T200

Diffuse reflection sensor

O8T-FPKG/IO-Link/2,0M

Permanent current rating of switching output DC	[mA]	100	
Switching frequency DC	[Hz]	1000	
Short-circuit protection		yes	
Type of short-circuit protection		pulsed	
Detection zone			
Range	[mm]	0...180; (white paper 200 x 200 mm)	
Max. light spot diameter	[mm]	18	
Light spot dimensions refer to		at maximum range	
Interfaces			
Communication interface		IO-Link	
Transmission type		COM2 (38,4 kBaud)	
IO-Link revision		1.1	
SDCI standard		IEC 61131-9	
Profiles		Smart Sensor: Device Identification; Device Diagnosis; Teach Channel; Switching Channel	
SIO mode		yes	
Required master port type		A	
Min. process cycle time	[ms]	2.5	
IO-Link process data (cyclical)		**function**	**bit length**
		process value	8
		device status	4
		binary switching information	1
IO-Link functions (acyclical)		application specific tag; operating hours counter; switching cycles counter	
Supported DeviceIDs		**Type of operation**	**DeviceID**
		default	788
Operating conditions			
Ambient temperature	[°C]	-25...60	
Protection		IP 65; IP 67	
Tests / approvals			
EMC		EN 60947-5-2	
MTTF	[years]	1054	
UL approval		Ta	-25...60 °C
		Enclosure type	Type 1
		power supply	Limited Voltage/Current
		UL Approval no.	E016
		File number UL	E174191
Mechanical data			
Weight	[g]	38.2	
Housing		rectangular	
Dimensions	[mm]	28.1 x 8.1 x 14.4	
Materials		housing: ABS; stainless steel (316L/1.4404)	
Lens material		PMMA	
Lens alignment		side lens	

O8T200

Diffuse reflection sensor

O8T-FPKG/IO-Link/2,0M

Displays / operating elements

Display	switching status	1 x LED, yellow
	operation	1 x LED, green

Remarks

Pack quantity	1 pcs.

Electrical connection

Cable: 2 m, PVC, black, Ø 2.9 mm; 3 x 0.08 mm²

Connection

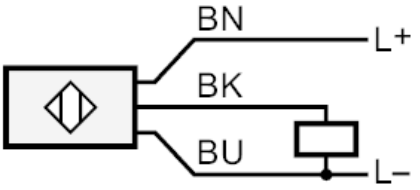

	Core colours :
BN	brown
BK	black
BU	blue

Diagrams and graphs

excess gain graph

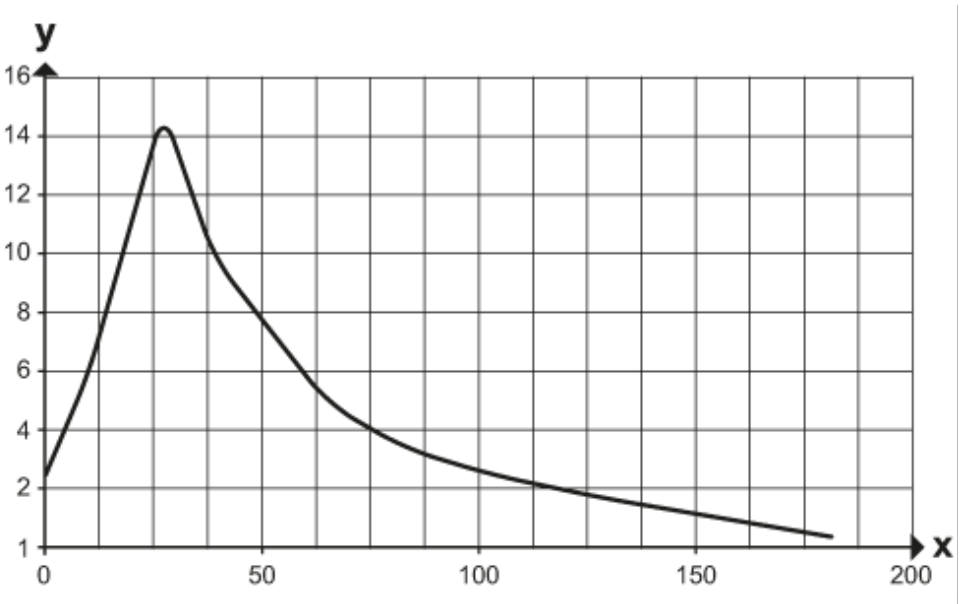

x: distance [mm]

y: excess gain factor