Rear View of Assembly

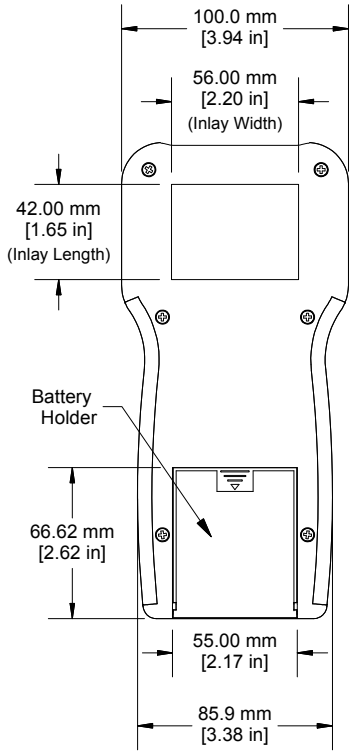

Top View of Assembly

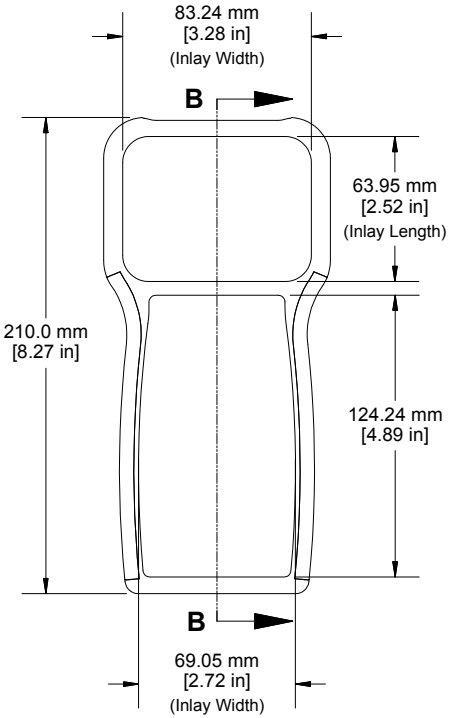

SECTION B-B
(Side View of Assembly)

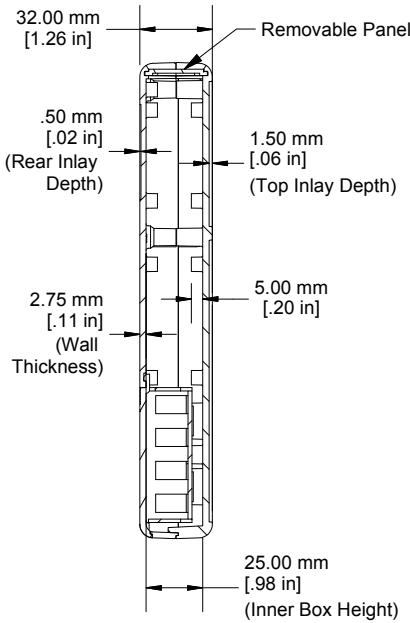

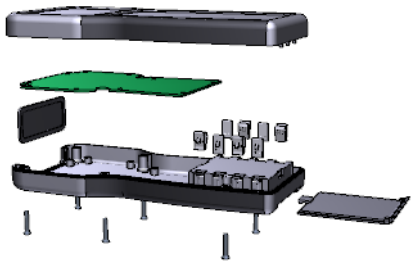

Top End View of Assembly

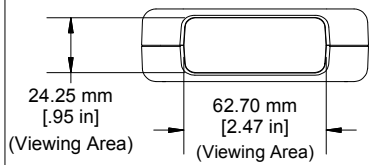

Top/Bottom Panel

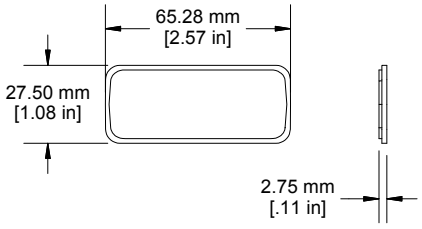

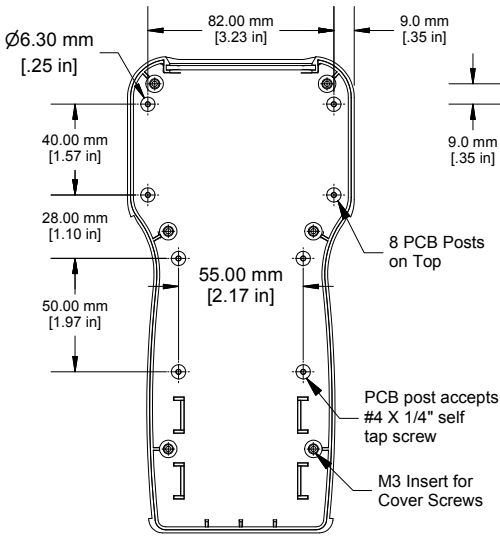

Inside View of Top

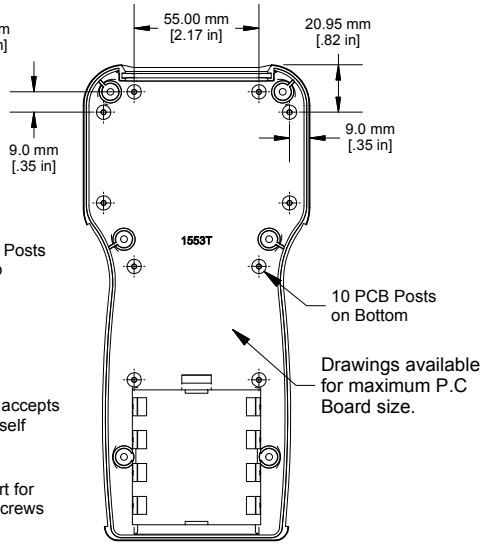

Inside View of Bottom

Enclosures can be Factory Modified (Milling, Drilling, Printing etc.)
Contact Factory mjm@hammondmfg.com for quotes
Solid models of this enclosure available in STEP or IGES.

NOTE	
Enclosure molded from FR ABS (UL94-V0) plastic.	
Purchased assembly includes top and bottom cover, 1 removable panel, battery spring clips (8 pcs), 9V adapters (2 pcs) and 6 cover screws (M3-0.5 x 18mm). M3 Brass inserts are installed to accept the cover screws. (P.C. Board not supplied)	
PART NUMBERS	
1553T Battery Enclosure	
Black Enclosure/Grey Over-mold	1553TBKBAT
Grey Enclosure/Grey Over-mold	1553TGYBAT
ACCESSORIES	
Replacement Cover Screws (Pkg 100) [M3-0.5 x 18mm, Flat Head]	1594MS100 (Silver) 1594MS100BK (Black)
P.C. Board Screws [#4 x 1/4"(6.4mm) Self Tapping]	1593ATS50 (Pkg 50) 1593ATS100 (Pkg 100)

HAMMOND MANUFACTURING™

1553TBAT

www.hammondmfg.com