Datasheet - EX-AZM 161SK-12/12RK-024-3D

Solenoid interlock / EX-AZM 161



(Minor differences between the printed image and the original product may exist!)

- Screw connection
- 6 Contacts
- 130 mm x 114 mm x 30 mm
- Large wiring compartment
- Clamping force 2000N
- Manual release
- Interlock with protection against incorrect locking.
- High holding force
- Long life
- Double-insulated ⧈
- Ex-certified screwed cable gland
- Ex certified
- 4 cable entries M 16 x 1.5

Ordering details

Product type description	EX-AZM 161SK-12/12RK-024-3D
Article number	101185420
EAN code	4030661324982
eCl@ss	27-27-26-03

Approval

Approval	ATEX

Classification

Standards	EN ISO 13849-1
B_{10d} Opener (NC)	2.000.000
Mission time	20 Years
notice	$MTTF_d = \frac{B_{10d}}{0,1 \times n_{op}}$ $n_{op} = \frac{d_{op} \times h_{op} \times 3600\ s/h}{t_{cycle}}$

Global Properties

Product name	EX-AZM 161
Standards	EN 60079-0, EN 60079-31, EN 60947-5-1, BG-GS-ET-19
Compliance with the Directives (Y/N) CE	Yes
Number of actuating directions	3 piece
Active principle	electromechanical

Duty cycle	Magnet 100 %
Materials	
- Material of the housings	Plastic, glass-fibre reinforced thermoplastic, self-extinguishing
- Material of the contacts	Silver
Housing coating	None
Weight	470 g

Mechanical data

Actuating play in direction of actuation	5.5 mm
Design of electrical connection	Screw connection
Cable cross-section of the cable glands	
- Min. Cable cross-section of the cable glands	Ø 5 mm
- Max. Cable cross-section of the cable glands	Ø 10 mm
Cable section	
- Min. Cable section	1 x 0,75 mm²
- Max. Cable section	1 x 1.5 mm²
Mechanical life	> 1.000.000 operations
notice	All indications about the cable section are including the conductor ferrules.
Emergency unlocking device (Y/N)	No
Manual release (Y/N)	Yes
Emergency release (Y/N)	No
Latching force	30 N
Positive break force	20 N
positive break travel	10 mm
Clamping force F_{max}	2000 N
Impact energy	1 J
Max. Actuating speed	1 m/s
Actuating frequency	max. 1000 / h

Ambient conditions

Ambient temperature	
- Min. environmental temperature	−15 °C
- Max. environmental temperature	+50 °C
Protection class	IP67

Electrical data

Design of control element	Normally open contact (NO), Opener (NC)
Switching principle	Creep circuit element
Number of auxiliary contacts	2 piece
Number of safety contacts	4 piece
Power to unlock	Yes
Power to lock	No
Rated control voltage U_s	24 VAC/DC
Power consumption	max. 10 W
Rated impulse withstand voltage U_{imp}	4 kV
Rated insulation voltage U_i	250 V
Thermal test current I_{the}	5 A
Utilisation category	AC-15: 230 V / 4 A, DC-13: 24 V / 2,5 A
Max. fuse rating	6 A gG D-fuse

ATEX

	EX II 3D Ex tc IIIC T80°C Dc X
Explosion protection categories for gases	None
Explosion protection Zones for gases	None
Explosion protected category for dusts	3D
Explosion protection Zones for dusts	22

Dimensions

Dimensions of the sensor	
- Width of sensor	130 mm
- Height of sensor	114 mm
- Length of sensor	30 mm

notice

Manual release

- For maintenance, installation, etc.
- For manual release using M5 triangular key, available as accessory

Included in delivery

Actuators must be ordered separately.

Including Ex-certified screwed cable gland and screw plug

Keywords

Keywords	Ex, EEx, ATEX, Ex AZM161, Ex AZM161, AZM 161 Ex, AZM161ex, AZM161ex, ATEX AZM161

Diagram

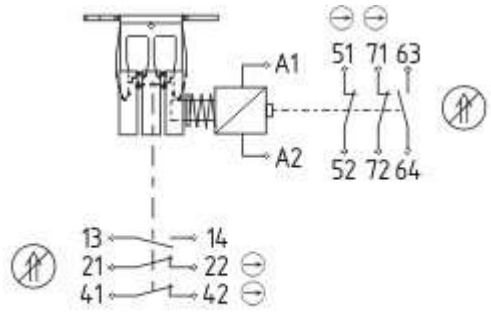

13	14	21	22	41	42	51	52	63	64	71	72	A1	A2

Note Diagram

positive break NC contact

active

no active

Normally-open contact

Normally-closed contact

Switch travel diagram

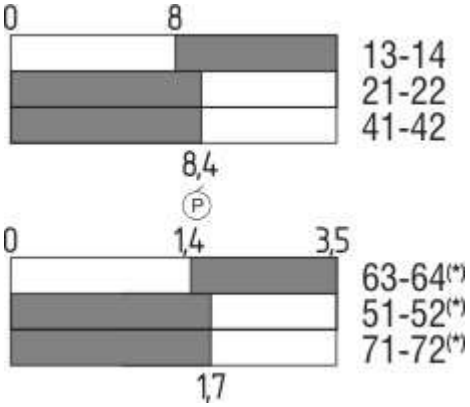

Notes Switch travel diagram

Contact closed

Contact open

Setting range

L Break point

P Positive opening sequence/- angle

VS adjustable range of NO contact

VÖ adjustable range of NC contact

N after travel

Ordering code

EX-AZM 161 **(1)**-12/12-**(2)**K**(3)**-024-3D

(1)	
SK	Screw connection
CC	Cage clamps
(2)	
without	Latching force 5 N
R	Latching force 30 N
(3)	
without	Power to unlock
A	Power to lock

Documents

Operating instructions and Declaration of conformity (it) 465 kB, 26.03.2013
Code: mrl_ex-azm161_it

Operating instructions and Declaration of conformity (nl) 536 kB, 24.09.2012
Code: mrl_ex-azm161_nl

Operating instructions and Declaration of conformity (es) 468 kB, 05.06.2013
Code: mrl_ex-azm161_es

Operating instructions and Declaration of conformity (de) 467 kB, 26.02.2013
Code: mrl_ex-azm161_de

Operating instructions and Declaration of conformity (en) 473 kB, 26.02.2013
Code: mrl_ex-azm161_en

Operating instructions and Declaration of conformity (pl) 524 kB, 23.09.2014
Code: mrl_ex-azm161_pl

Operating instructions and Declaration of conformity (da) 470 kB, 26.03.2013
Code: mrl_ex-azm161_da

Operating instructions and Declaration of conformity (pt) 483 kB, 23.10.2013
Code: mrl_ex-azm161_pt

Operating instructions and Declaration of conformity (jp) 577 kB, 05.06.2013
Code: mrl_ex-azm161_jp

Operating instructions and Declaration of conformity (fr) 474 kB, 05.06.2013
Code: mrl_ex-azm161_fr

Brochure (de) 7 MB, 25.02.2011
Code: b_atep01

Images

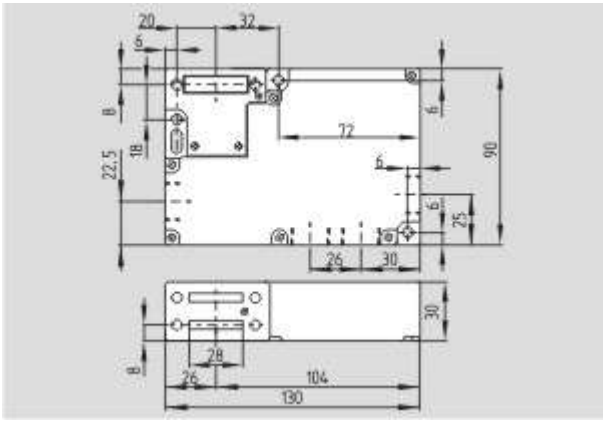

Dimensional drawing (basic component)

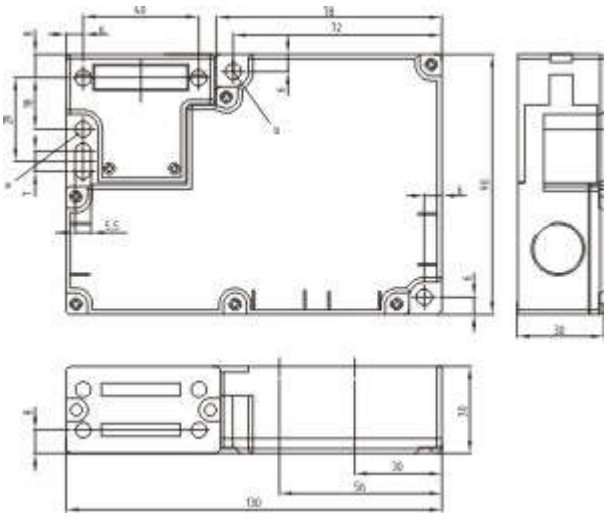
Dimensional drawing (basic component)

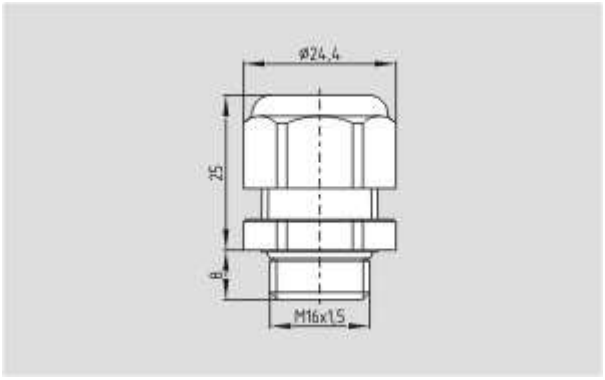

Dimensional drawing (miscellaneous)

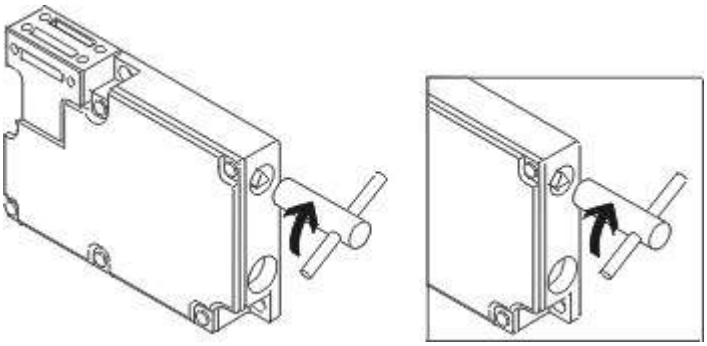
Operating principle

System components

Actuator



101145117 - AZM 161-B1



101144416 - AZM 161-B1E



101175431 - AZM 161-B1F



101144420 - AZM 161-B6

• For very smal actuating radii



101178199 - AZM 161-B1-2024



101173089 - AZM 161-B1-2053 WITH BALL LATCH



101176642 - AZM 161-B1-2177 WITH CENTERING GUIDE



101174113 - AZM 161-B6-2177 WITH CENTERING GUIDE

• For very smal actuating radii



101171125 - AZM 161-B1S



101171859 - AZM 161-B1ES



101170375 - AZM 161-B6S

Accessories

101150376 - Mounting set MS AZM 161 P



101149213 - Mounting set MS AZM 161 R/P

101145379 - SLOT SEALING PLUGS AZM 161

- To cover unused actuator slots
- For protection against the ingress of course dirt
- Simple clip-in fitting



101100887 - TRIANGULAR KEY TK-M5

- For manual release using M5 triangular key, available as accessory
- For maintenance, installation, etc.

Mounting accessories

101135340 - TAMPERPROOF SCREWS M 5 x 20

- To mount the actuator
- Higher protection against tampering with interlock
- Protects against unauthorised removal of actuator
- Various lengths available

101135339 - TAMPERPROOF SCREWS M 5 x 16

- To mount the actuator
- Higher protection against tampering with interlock
- Protects against unauthorised removal of actuator
- Various lengths available