EVF620

Connecting cable with socket

ADOAE050VAS0050P05

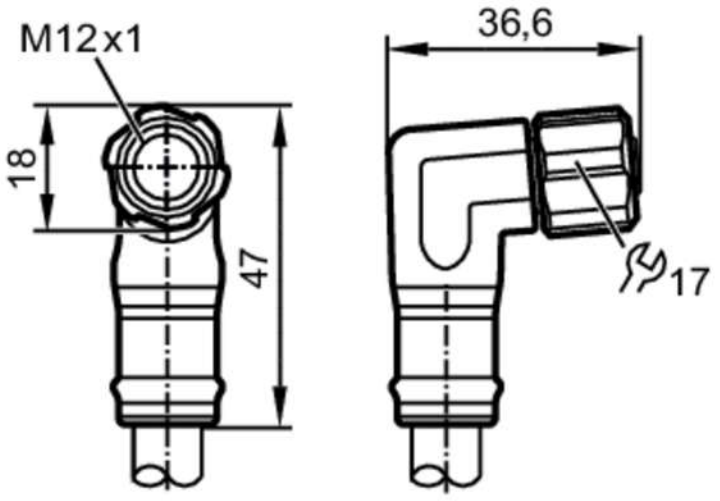

Application		
Special feature		Free from silicone; Halogen-free; Gold-plated contacts; Drag chain suitability
Design		power cable, L-coded
Application		Use in wet areas and in the food and beverage industry
Free from silicone		yes
Electrical data		
Operating voltage	[V]	63 DC
Protection class		III
Max. current load total	[A]	16
Operating conditions		
Ambient temperature	[°C]	-25...100
Note on ambient temperature		cULus: …65 °C
Storage temperature	[°C]	-25...55
Storage humidity	[%]	10...100
Other climatic conditions for storage according to stated class		1K22/ DIN 60721-3-1
Protection		IP 65; IP 67; IP 69K
Mechanical data		
Weight	[g]	8970
Moulded-body material		PP
Material nut		stainless steel (1.4404 / 316L)
Sealing material		EPDM
Drag chain suitability		yes

EVF620

Connecting cable with socket

ADOAE050VAS0050P05

Drag chain suitability	bending radius for flexible use	min. 10 x cable diameter
	travel speed	max. 3.3 m/s for a horizontal travel length of 5 m and max. acceleration of 5 m/s²
	bending cycles	> 1 Mio.
	torsional strain	± 180 °/m

Remarks

Pack quantity	1 pcs.

Electrical connection

Cable: 50 m, MPPE, Halogen-free, grey, Ø 10.1 mm; 5 x 2.5 mm² (141 x Ø 0.15 mm)

Electrical connection - socket

Connector: 1 x M12, angled; coding: L; Moulded body: PP, grey; Locking: stainless steel (1.4404 / 316L); Sealing: EPDM; Contacts: gold-plated; Tightening torque: 0.6...1.2 Nm



Connection

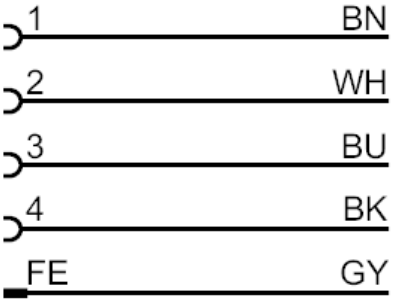

	Core colours :
BK =	black
BN =	brown
BU =	blue
GY =	grey
WH =	white