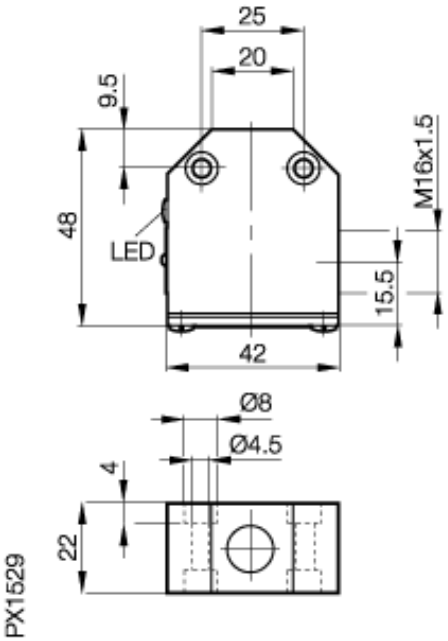

Inductive Sensors
BES 516-346-H2-Y
22 x 42 x 48
normally-open
Sn=5mm
shielded

Common Data

Product name	H0
Mounting in steel	shielded
Rated operating distance Sn	5mm
Assured operating distance Sa	0...4.0mm
Repeatability R	<= 5%
Hysteresis	<= 15%
Function indication	yes
Ambient temperature range	-25...+70°C
Polution Degree	3
IEC-Code	I1D22AP3
Time delay before availability	<= 10ms

Mechanical Data

Measurements BxHxT or DxT	22 x 42 x 48mm
Housing material	Aluminium alloy
Material of sensing face	PA 12
Degree of protection	IP67IP
Connection	Screw terminals

Schock: Halfsinus, 30 gn, 11ms
Vibration: 55 Hz, 1mm Amplitude, 3 x 30 Minutes

Electrical Data

Current type	DC
Wiring	3-Wire
switching function	normally-open
Output signal	PNP
Rated opertional voltage	24 DCV
Rated opertional current	130mA
Supply voltage	10...30 DCV
Ripple	<= 15%
max. switching frequency	500Hz
No-load supply current	<= 25/<= 15mA
Off-state current	<= 80µA
Voltage drop	<= 3.5/-V
Short circuit protection	yes
Protected against polarity reversal	yes

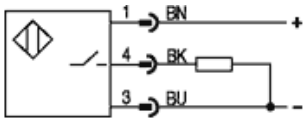

CE

Utilization categories	DC 13
Insulation class	II

Datasheet number:

Definitions see general catalog.
If not otherwise noted, ratings according to
IEC 60947-5-2 (DIN EN60947-5-2)

Balluff GmbH
P.O.Box 1160
73761 Neuhausen Germany
Phone (07158) 173-0 Fax (07158) 5010