COMBI 1610 WH



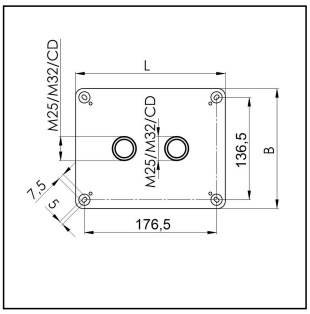

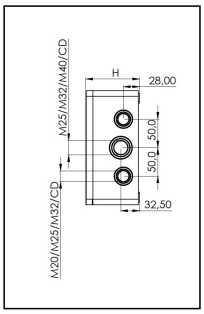

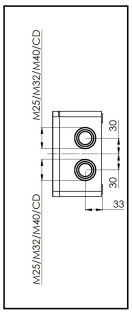

Products may differ in size, colour and appearance to those shown. If you require further information or customisation, please contact us directly.

COMBI RoHS

Material	Polycarbonate
Material sealing gasket	PU
Temp. range min	-30 °C
Temp. range max	100 °C
Temperatures during install.	-5 °C - 60 °C
Protection class	IP66 / IP67
Glow wire test	960 °C
Voltage	690 V
Rated cross section	16 mm²
External dimensions LxWxH	200 x 160 x 94 mm
Product Color	RAL 9001
Order no. RAL 9001	10110743
Type	COMBI 1610 WH
Packing unit	1
EAN number	4007686251845
Tariff number	39269097
ETIM-Classification	EC002600

Remarks:

IP66: using the QUIXX self sealing membrane screw

IP67: using the knockout entry together with ESKV cable gland

Equipment:

- 10 knockouts side 6x M25/M32/M40; 4x M20/M25/M32
- 2 knockouts in the bottom 2x M25/M32
- 4 captive cover screws

Your Contact:
WISKA UK Ltd.
Unit 7, Hurling Way · St. Columb Major Business Park · TR9 6SX, St. Columb Major, Cornwall · Great Britain
☎ +44-12-08816062 · 🖷 +44-12-08816708
info@wiska.co.uk · www.wiska.co.uk

Other technical data on request / subject to change without notice

- including 3 QUIXX membrane spout EMT 32

- CD (cable diameter) 6-28mm

Mounting:

4 internal openings outside of the sealing area

Recommended accessories

External mounting - COMBI LG	10108836
SP-HKT 1610 Terminal block	22001224

16.12.2024

Your Contact:
WISKA UK Ltd.
Unit 7, Hurling Way · St. Columb Major Business Park · TR9 6SX, St. Columb Major, Cornwall · Great Britain
☎ +44-12-08816062 · 🖷 +44-12-08816708
info@wiska.co.uk · www.wiska.co.uk

Other technical data on request / subject to change without notice

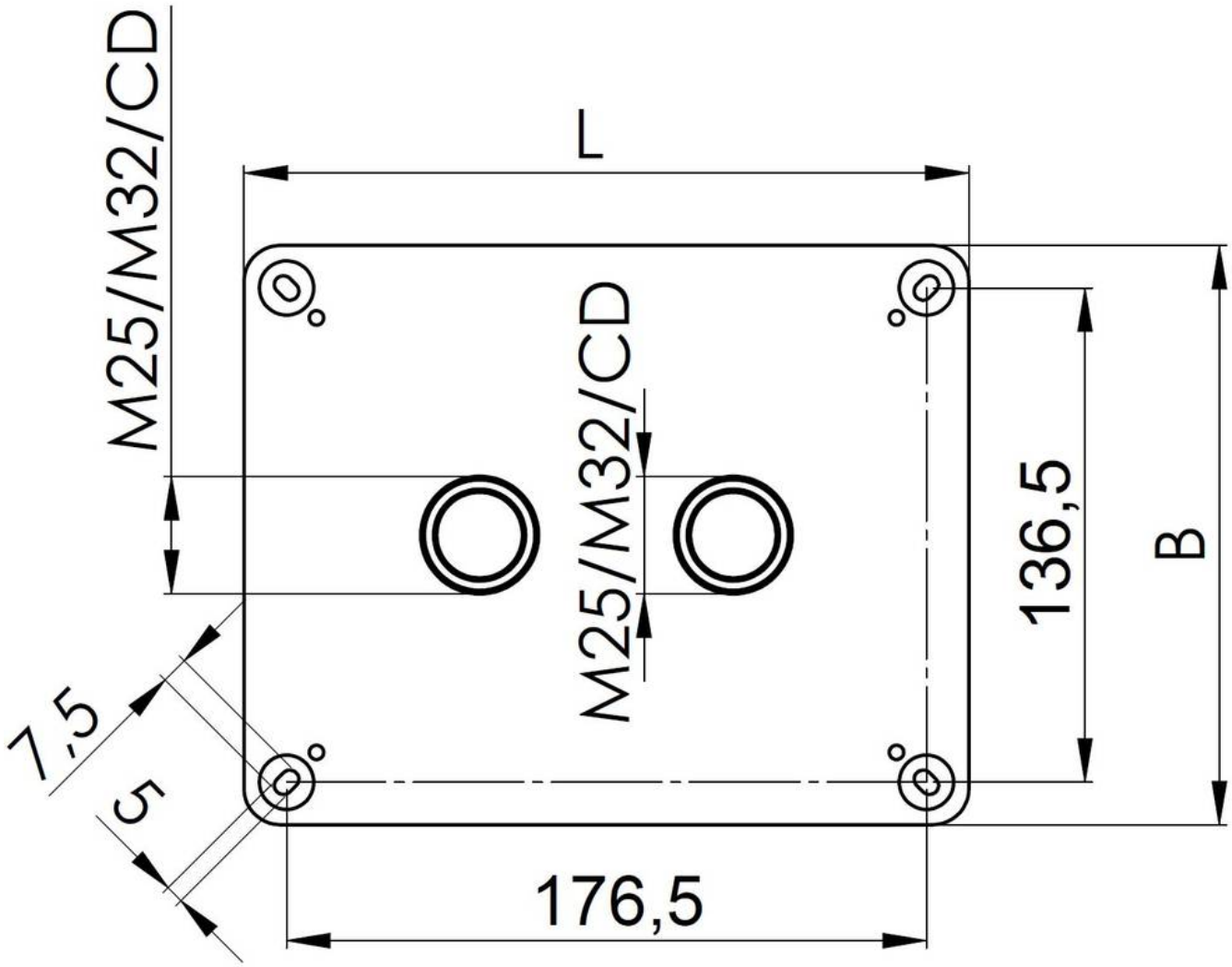

Your Contact:
WISKA UK Ltd.
Unit 7, Hurling Way · St. Columb Major Business Park · TR9 6SX, St. Columb Major, Cornwall · Great Britain
☎ +44-12-08816062 · 🖷 +44-12-08816708
info@wiska.co.uk · www.wiska.co.uk

Other technical data on request / subject to change without notice

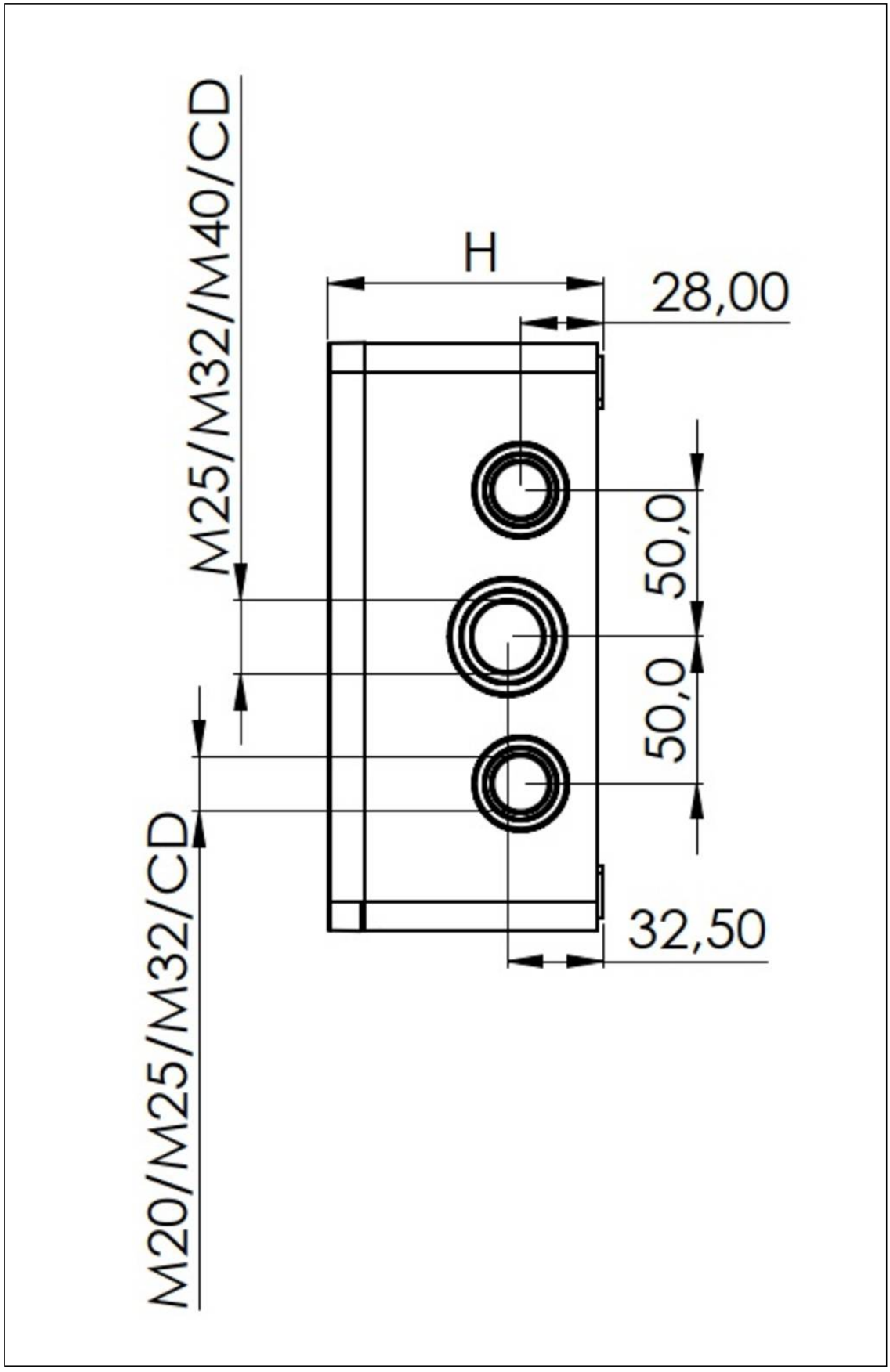

Your Contact:
WISKA UK Ltd.
Unit 7, Hurling Way · St. Columb Major Business Park · TR9 6SX, St. Columb Major, Cornwall · Great Britain
☎ +44-12-08816062 · 🖷 +44-12-08816708
info@wiska.co.uk · www.wiska.co.uk

Other technical data on request / subject to change without notice