WATERPROOF GT 53-26 PTS

Waterproof polypropylene tool case





General features

- waterproof and airtight (IP 67)
- interstackable
- corrosionproof, sandproof and dustproof
- shockproof and crushproof
- temperature rating -33°C/+90°C
- ergonomic handle, rubber coated grip
- jam free latches with user-friendly opening mechanism
- corrosion proof metal hinges with lid stay features
- pressure release valve
- special PU injected seal
- stainless steel reinforced pad lockable points providing maximum security

Internal Configuration

- document wallet
- 2 tool pallets with pouches and elastics
- 1 lid panel with pouches (double side)
- bottom tray with removable dividers
- wheels and telescopic handle
- equipped with gas-pressurised lid supports

Versions

WATERPROOF GT 42-09 PEL
WATERPROOF GT 42-09 PTS
WATERPROOF GT 42-16 PEL
WATERPROOF GT 42-16 PTS
WATERPROOF GT 44-19 PEL
WATERPROOF GT 44-19 PSS
WATERPROOF GT 44-19 PTS
WATERPROOF GT 52-21 PEL
WATERPROOF GT 52-21 PSS
WATERPROOF GT 52-21 PTS
WATERPROOF GT 53-26 PEL
WATERPROOF GT 53-26 PTS
WATERPROOF GT 58-23

EAN

8024482180816

Technical features	A	B	C	D	E
mm internal dimensions	538	405	250	60	190
	Weight Kg 12,00				
inc internal dimensions	21 3/16	15 15/16	9 13/16	2 3/8	7 1/2
	Weight lbs 26.45				

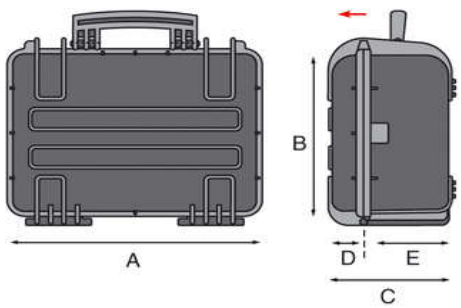

Copyright © 2022 - GT Line srl - Via del Lavoro, 9 - 40053 Loc. Crespellano Valsamoggia (Bologna) - Italy - Phone +39/051/65041 - Fax +39/051/734925
sales@gtline.com - www.gtline.com

WATERPROOF GT 53-26 PTS

Waterproof polypropylene tool case

Watertight and perfectly sealed thanks to the exclusive neoprene “O” ring and to the purge valve, these cases grant an absolute protection to your tools. Made of resistant lightweight resin, they are provided with strong locks and a useful and ergonomic handle. They are ideal for use in the harshest environment, such as industrial, aeronautical, military and nautical fields.

Copyright © 2022 - GT Line srl - Via del Lavoro, 9 - 40053 Loc. Crespellano Valsamoggia (Bologna) - Italy - Phone +39/051/65041 - Fax +39/051/734925
sales@gtline.com - www.gtline.com

Accessories

WATERPROOF GT 53-26 PTS



EXPL COMBILOCK



EXPL PADLOCK



LOCK BELT



WL01



WL02



WL03



WL04



WL05



EXPL TSA.DIGILOCK



UNIVERS.TROLLEY

Copyright © 2022 - GT Line srl - Via del Lavoro, 9 - 40053 Loc. Crespellano Valsamoggia (Bologna) - Italy - Phone +39/051/65041 - Fax +39/051/734925

sales@gtline.com - www.gtline.com