OMRON

# PCB Relay | G5LE-E/-G

## Single-pole 10A35VDC 0.8mm Contact Gap Power Relay : G5LE-G

## Single-pole 16A250VAC Power Relay : G5LE-E

- Sub-miniature 'sugar cube ' relay with universal terminal footprint.
- UL class-F coil insulation system.
- Tracking resistance: CTI>250.
- Withstands impulse of up to 4,500 V.
- RoHS compliant.

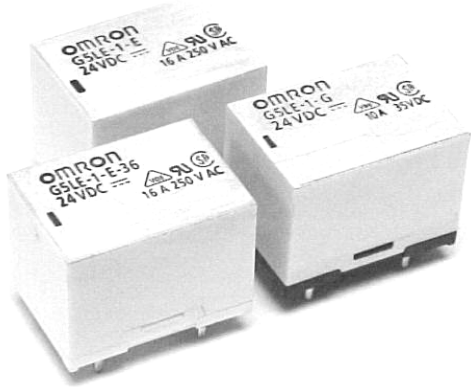


VDE
REG.-Nr.6850

# Ordering Information

| Enclosure Rating | Contact Form | Rated load | |
|---|---|---|---|
| | | 10A 35VDC | 16A 250VAC |
| Flux protection | SPDT | G5LE-1-G | G5LE-1-E |
| | SPST-NO | G5LE-1A-G | G5LE-1A-E |

**Note:** When ordering, add the rated coil voltage to the number.
Examples : G5LE-1-E 12 VDC
Rated coil voltage

## ■ Model Number Legend

**G5LE** - ☐ ☐ - ☐ - ☐ - ☐ - ☐ - ☐ ☐VDC
1 2 3 4 5 6 7 8

**1. Number of Poles**
1 : 1 pole

**2. Contact Form**
None : SPDT
A : SPST-NO

**3. Enclosure ratings**
None : Flux protection

**4. Insulation System**
None : Class F (155°C)

**8 Rated Coil Voltage**
5, 12 & 24 (for suffix-E)
9, 12, 20 & 24 (for suffix-G)

**5. Classification**
G : 0.8mm contact gap type
E : High capacity type

**6. Coil Power Consumption / Coil Characteristics**
None : Approx. 400mW (applicable to suffix -E only)
None : Approx. 700mW (applicable to suffix -G only)
36 : Approx. 360mW (applicable to suffix -E only)

**7. Packaging**
None : Standards Polystyrene tray
SP : Anti-static Tube packing

# Specifications

## ■ Coil Ratings

### 700-mW Type (G5LE-G)

| Rated voltage | 9 VDC | 12 VDC | 20 VDC | 24 VDC |
|---|---|---|---|---|
| Rated current | 77.8 mA | 58.3 mA | 35.0 mA | 29.2 mA |
| Coil resistance | 115.7 Ω | 205.7 Ω | 571.4 Ω | 822.9 Ω |
| Must operate voltage | 75% of rated voltage (max.) | | | |
| Must release voltage | 10% of rated voltage (min.) | | | |
| Max. voltage | 120% of rated voltage at 85°C, 150% of rated voltage at 23°C | | | |
| Power consumption | Approx. 700 mW | | | |

**Note:** The rated current and coil resistance are measured at a coil temperature of 23°C with a tolerance of ±10%.

### 400-mW Type (G5LE-E)

| Rated voltage | 5 VDC | 12 VDC | 24 VDC |
|---|---|---|---|
| Rated current | 80.0 mA | 33.3 mA | 16.7 mA |
| Coil resistance | 62.5 Ω | 360.0 Ω | 1440.0 Ω |
| Must operate voltage | 75% of rated voltage (max.) | | |
| Must release voltage | 10% of rated voltage (min.) | | |
| Max. voltage | 130% of rated voltage at 85°C, 170% of rated voltage at 23°C | | |
| Power consumption | Approx. 400 mW | | |

**Note:** The rated current and coil resistance are measured at a coil temperature of 23°C with a tolerance of ±10%.

### 360-mW Type (G5LE-E-36)

| Rated voltage | 5 VDC | 12 VDC | 24 VDC |
|---|---|---|---|
| Rated current | 72.0 mA | 30.0 mA | 15.0 mA |
| Coil resistance | 69.4 Ω | 400.0 Ω | 1600.0 Ω |
| Must operate voltage | 75% of rated voltage (max.) | | |
| Must release voltage | 10% of rated voltage (min.) | | |
| Max. voltage | 130% of rated voltage at 85°C, 170% of rated voltage at 23°C | | |
| Power consumption | Approx. 360 mW | | |

**Note:** The rated current and coil resistance are measured at a coil temperature of 23°C with a tolerance of ±10%.

## ■ Contact Ratings

| Item | G5LE-G | G5LE-E/-E-36 |
|---|---|---|
| Load | Resistive load (cos Ø=1) | Resistive load (cos Ø=1) |
| Rated load | 10A at 35VDC | 16A at 250VAC |
| Rated carry current | 10A | 16A |
| Max. switching voltage | 35VDC | 250VAC |
| Max. switching current | DC : 10A | AC : 16A |
| Max. switching capacity | 350W | 4000VA |
| Min. permissible load | 100mA at 5VDC | 100mA at 5VDC |

## ■ Characteristics

| | |
|---|---|
| **Contact resistance** | 100mΩ max. |
| **Operate time** | 10ms max. |
| **Release time** | 5ms max. |
| **Bounce time** | Operate : Approx. 0.6 ms<br>Release : Approx. 7.2 ms |
| **Max. switching frequency** | Mechanical : 18,000 operations/hr<br>Electrical : *1,800 operations/hr |
| **Insulation resistance** | 100MΩ min. (at 500VDC) |
| **Dielectric strength** | 750VAC (for suffix -E), 50/60 Hz for 1 min. between contacts of same polarity<br>1500VAC (for suffix -G), 50/60 Hz for 1 min. between contacts of same polarity<br>2,000VAC, 50/60 Hz for 1 min. between coil and contacts |
| **Impulse withstand voltage** | 4,500V between coil and contacts, 1.2 X 50 μsec |
| **Vibration resistance** | Destruction : 10 to 55Hz, 1.5mm double amplitude<br>Malfunction : 10 to 55hHz, 1.5mm double amplitude |
| **Shock resistance** | Destruction : 1,000m/s$^2$ (approx. 100G)<br>Malfunction : 100m/s$^2$ (approx. 10G) |
| **Life expectancy** | Mechanical : 10,000,000 operations min. (at 18,000 operations/hr)<br>Electrical : *100,000 operations min. (at 1,800 operations/hr, 12A 250VAC) |
| **Ambient temperature** | Operating : -40°C to 85°C |
| **Ambient humidity** | Operating : 35% to 85% |
| **Weight** | Approx. : 12g |

**Note :** * Applicable for G5LE-1-E normally open contact only.

## ■ Approved Standards

### UL508, UL114, UL478, UL325, UL873, UL1409 (File No. E41643)/CSA C22.2 No. 14, No. 1 (File No. LR31928)

| Model | Coil ratings | Contact ratings |
|---|---|---|
| G5LE-E/-E-36 | 5 to 24 VDC | 16 A, 250 VAC (general use, normally open contact, 50,000 cycles)<br>12 A, 250 VAC (general use, normally open contact, 105°C, 100,000 cycles)<br>12 A, 250 VAC (general use, normally close contact, 30,000 cycles) |
| G5LE-G | 9 to 24 VDC | 10 A, 35 VDC (resistive, normally open contact, 100,000 cycles)<br>10 A, 35 VDC (resistive, normally close contact, 50,000 cycles) |

### EN61810-1 (2nd Ed) / EN60255-25 (VDE Reg. No. 6850)

| Model | Coil Rating | Contact rating |
|---|---|---|
| G5LE-E/-E-36 | 5 to 24 VDC | 16 A, 250 VAC (resistive, normally open contact, 85°C 50,000 cycles)<br>12 A, 250 VAC (resistive, normally open contact, 105°C, 75,000 cycles) |
| G5LE-G | 9 to 24 VDC | 10 A, 35 VDC (resistive, normally open contact, 100,000 cycles)<br>10 A, 35 VDC (resistive, normally close contact, 50,000 cycles) |

# Engineering Data

**Max. Switching Capacity**

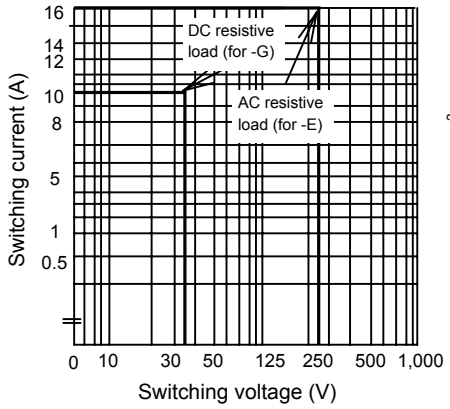


**Life Expectancy**

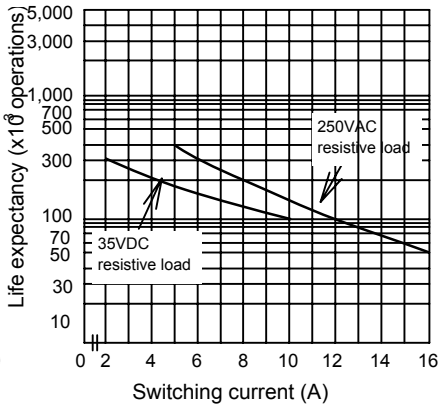


**Ambient Temp. Vs Max. Voltage**

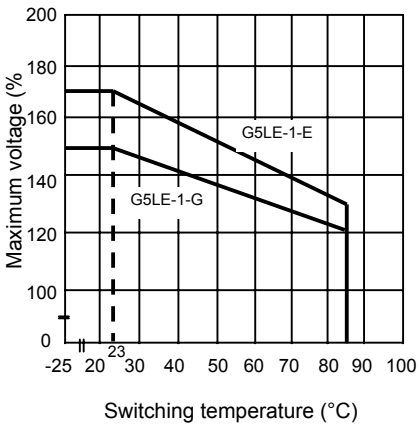


**Note:** The maximum coil voltage refers to the maximum value in a varyin range of operating power voltage not a continuous voltage

# Dimensions

Note: 1. All units are in millimeters unless otherwise indicated.
2. Orientation marks are indicated as follows :

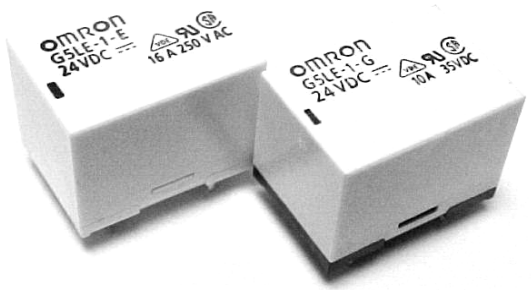


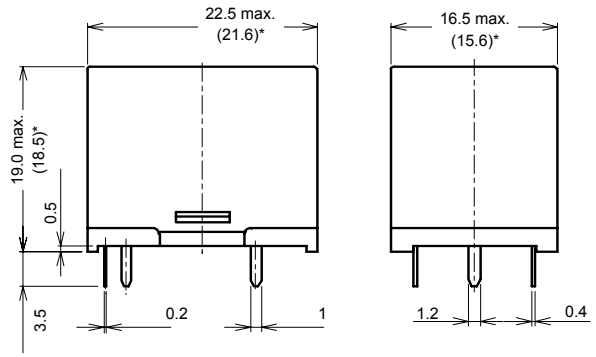


*Average value

**Terminal Arrangenement/Internal Connections (Bottom View)**

**SPDT**

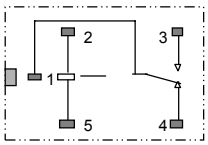


**SPST-NO**

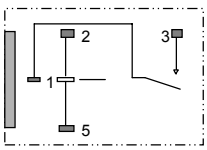


**Mounting Holes (Bottom View)**
Tolerance: ±0.1 mm unless specified

**SPDT**

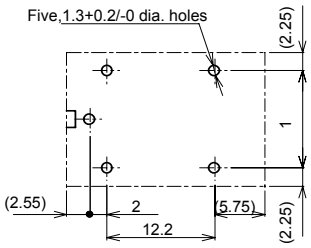


**SPST-NO**

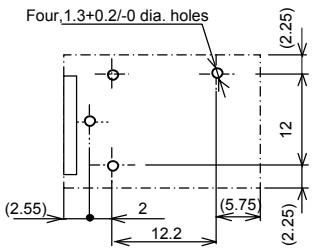

# Packaging

**Note :** 1. All units are millimeters unless otherwise indicated.

## ■ Polystyrene Trays Packing

| | | | |
|---|---|---|---|
| 1 Polystyrene | = | 100 | pcs relay |
| 1 Sleeve Packing | = | 5 | polystyrene tray |
| 1 Carton | = | 4 | sleeve packing |
| | = | **2000** | **pcs relay** |
| Weight | = | Approx. 24 Kg per carton | |

- Size of polystyrene tray: Approx. 311 x 196 x 35mm (L x W xH)
- Size of Carton: Approx. 450 x 316 x 320 mm (L x W xH)

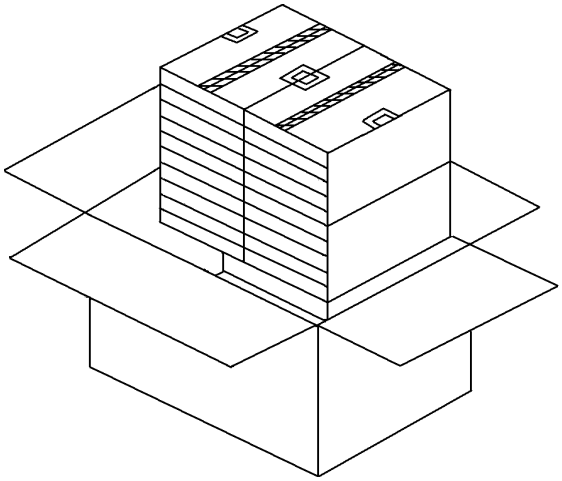

## ■ Tube Packing

| | | | |
|---|---|---|---|
| 1 Tube | = | 25 | relays |
| 1 Carton | = | 40 | tubes |
| | = | 1,000 | relays |
| Weight | = | Approx. 12 Kg per carton | |

- Size of Carton: Approx. 512 x 252 x 105 mm (L x W xH)

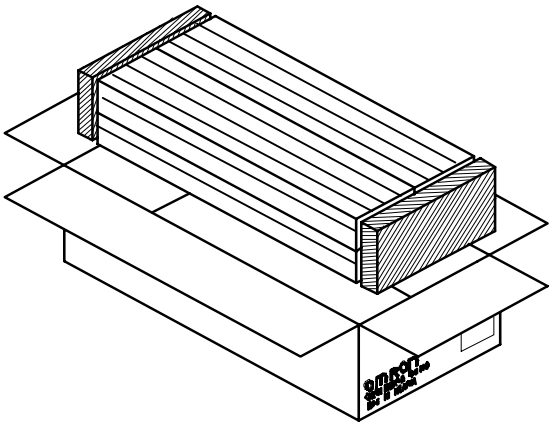

## ■ Ordering Information - Packaging

G5LE-1-E-□ DC12 by OMB

| KEY | | DESCRIPTION |
|---|---|---|
| None | : | Standards Polystyrene tray |
| SP | : | Anti-static Tube packing |

G5LE-1-G-□DC20 by OMB

| KEY | | DESCRIPTION |
|---|---|---|
| None | : | Standards Polystyrene tray |
| SP | : | Anti-static Tube packing |

**ALL DIMENSION SHOWN ARE IN MILLIMETERS**

To convert into inches, multiply by 0.03937, To convert grams into ounces, multiply by 0.03527