SV08-22 Poppet, 2-Way, Normally Closed

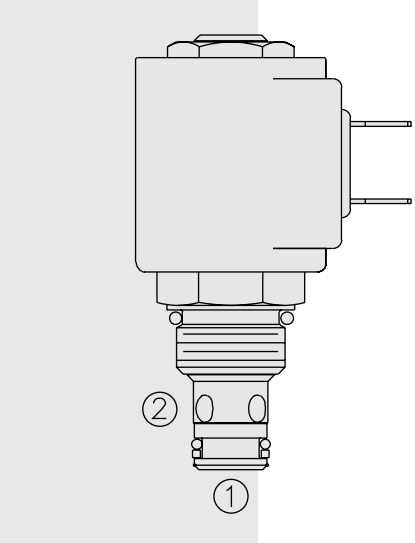

SYMBOLS

USASI:

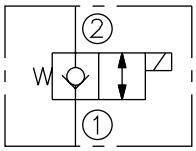

ISO:

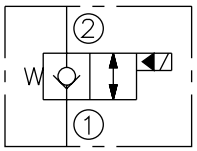

PERFORMANCE (Cartridge Only)

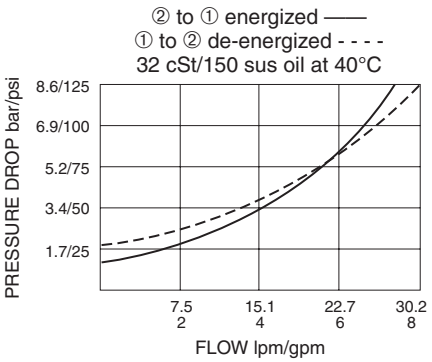

DESCRIPTION

A solenoid-operated, 2-way, normally closed, poppet-type, screw-in hydraulic cartridge valve, designed for low leakage blocking and load holding applications.

OPERATION

When de-energized, the **SV08-22** acts as a check valve, allowing flow from 1 to 2, while blocking flow from 2 to 1.

When energized, the poppet lifts to open the 2 to 1 flow path. In this mode, bidirectional flow is allowed.

Operation of Manual Override Option: To override, push button in, twist counter-clockwise 180° and release. In this position, the valve will remain open.

To return to normal operation, push button in, twist clockwise 180° and release. Override will be detented in this position.

FEATURES

- Continuous-duty rated solenoid.
- Hardened seat for long life and low leakage.
- Optional coil voltages and terminations.
- Efficient wet-armature construction.
- Cartridges are voltage interchangeable.
- Manual override option.
- Optional waterproof E-Coils rated up to IP69K.
- Unitized, molded coil design.
- Industry common cavity.
- Compact size.

RATINGS

Operating Pressure: 207 bar (3000 psi)

Flow: See Performance Chart

Internal Leakage: 0.15 cc/minute (3 drops/minute) max. at 207 bar (3000 psi)

Temperature: -40 to 120°C with standard Buna seals

Coil Duty Rating: Continuous from 85% to 115% of nominal voltage

Initial Coil Current Draw at 20°C: Standard Coil: 1.2 amps at 12 VDC; 0.13 amps at 115 VAC (full wave rectified).
E-Coil: 1.4 amps at 12 VDC; 0.7 amps at 24 VDC

Minimum Pull-in Voltage: 85% of nominal at 207 bar (3000 psi)

Filtration: See page 9.010.1

Fluids: Mineral-based or synthetics with lubricating properties at viscosities of 7.4 to 420 cSt (50 to 2000 sus); See Temperature and Oil Viscosity, page 9.060.1

Installation: No restrictions; See page 9.020.1

Cavity: VC08-2; See page 9.108.1

Cavity Tool: CT08-2XX; See page 8.600.1

Seal Kit: SK08-2X-T; See page 8.650.1

Coil Nut: Part No. 7004400;
For E-coils manufactured prior to 1-1-04, see page 3.400.1 for coil nut info.

DIMENSIONS

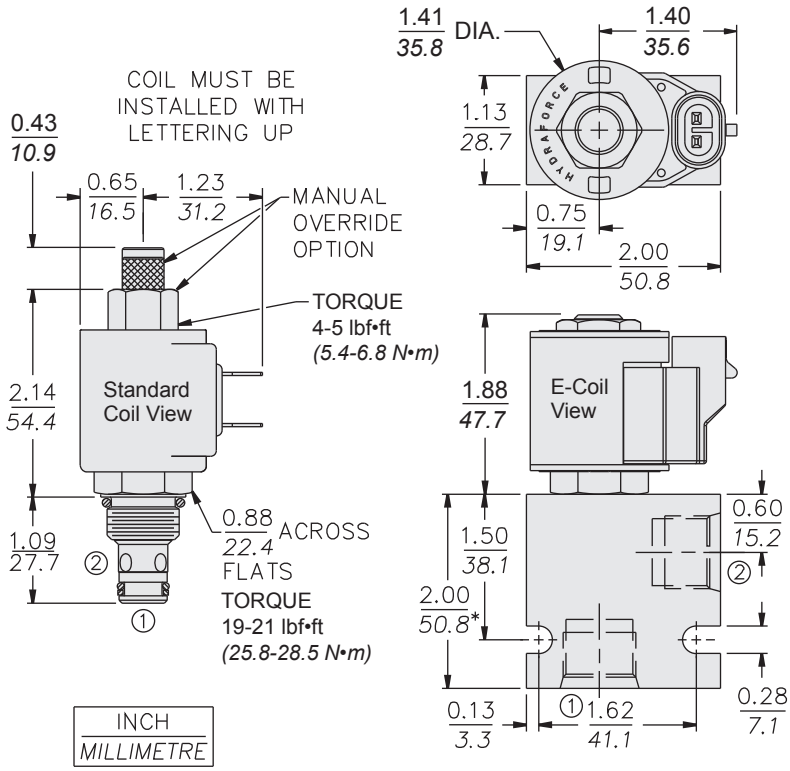

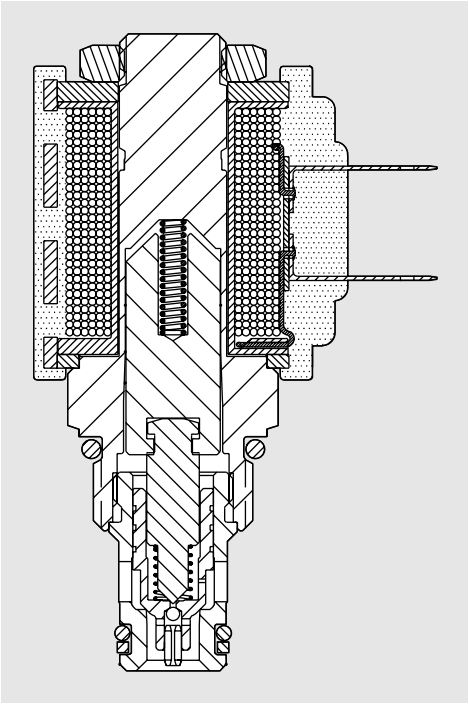

MATERIALS

Cartridge: Weight: 0.09 kg. (0.20 lbs.); Steel with hardened work surfaces. Zinc-plated exposed surfaces; Buna N O-rings and back-ups standard.

Standard Ported Body: Weight: 0.16 kg. (0.35 lbs.); Anodized high-strength 6061 T6 aluminum alloy, rated to 207 bar (3000 psi); Ductile iron bodies available; dimensions may differ. See page 8.008.1

Standard Coil: Weight: 0.11 kg. (0.25 lbs.); Unitized thermoplastic encapsulated, Class H high temperature magnetwire. See page 3.200.1

E-Coil: Weight: 0.14 kg. (0.3 lbs.); Perfect wound, fully encapsulated with rugged external metal shell; Rated up to IP69K with integral connectors.
Note: See page 3.400.1 for all E-Coil retrofit applications.

TO ORDER

SV08-22__ - __ __ __ - __ - __ __ __ __ __

Option
None (Blank)
Screen **S**
Manual Override **M**

Porting
Cartridge Only **0**
SAE 8 **8T**
3/8 in. BSP* **3B**
*BSP Body; U.K. Mfr. Only

Seals
Buna N (Std.) **N**
Fluorocarbon **V**

Voltage Std. Coil
0 Less Coil**
10 10 VDC†
12 12 VDC
24 24 VDC
36 36 VDC
48 48 VDC
24 24 VAC
115 115 VAC
230 230 VAC
**Includes Std. Coil Nut
† DS, DW or DL terminations only.

E-Coil
10 10 VDC
12 12 VDC
20 20 VDC
24 24 VDC

Termination (VDC) Std. Coil
DS Dual Spades
DG DIN 43650
DL Leadwires (2)
DL/W Leads w/Weatherpak® Connectors
DR Deutsch DT04-2P

Termination (VAC) Std. Coil
AG DIN 43650
AP 1/2 in. Conduit

Termination (VDC) E-Coil
ER Deutsch DT04-2P (IP69K Rated)
EY Metri-Pack® 150 (IP69K Rated)

Coils with internal diode are available. Consult factory.