Brand of NTN corporation

Technical data

UCP218-56

Bearing units



Grey cast housing, radial insert ball bearing with socket set screws,seal with slinger

KIT CONTENT

UC218-56G2, P218

VISUAL (S)

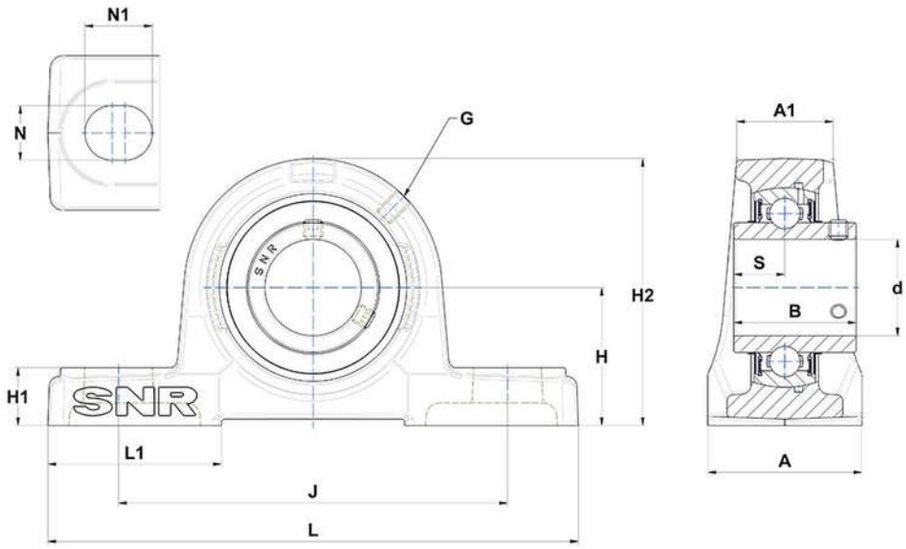

PRODUCT DEFINITION

Brand	SNR
A - Housing width	88 mm
A1 - Housing top width	55 mm
B - Width of Inner Ring	96 mm
d - Shaft diameter	88,9 mm
G - Grease fitting	M10x1

PRODUCT DEFINITION	
H - Distance mounting base to centerline spheric. seating diam.	101,6 mm
H1 - Housing foot height	34 mm
H2 - Housing height	200 mm
J - Mounting holes distance	262 mm
L - Housing length	327 mm
L1 - Housing foot length	100 mm
N - Mounting hole dimension	27 mm
N1 - Mounting hole length	33 mm
S - Distance front side/bearing centre	39,7 mm

PRODUCT PERFORMANCE	
C - Dynamic load rating	96000000 mN
C0 - Static load rating	71500000 mN
Operating temperature min.	253,15 °K
Operating temperature max.	373,15 °K

OTHER FEATURES	
Mass	13,56 kg
Recommended tightening torque for set screw	33.9 N-m