ITA

# iJW

Electronic controller for field service and new installations




# USER MANUAL

LEGGI E CONSERVA QUESTE ISTRUZIONI

READ AND SAVE THESE INSTRUCTIONS

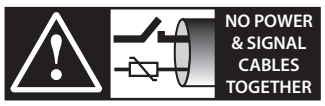


READ CAREFULLY IN THE TEXT!

**iJW**
+0300103EN - ENG
Up to date version available on
**www.carel.com**

## IMPORTANT WARNINGS

CAREL bases the development of its products on decades of experience in HVAC, on continuous investments in technological innovations to products, procedures and strict quality processes with in-circuit and functional testing on 100% of its products, and on the most innovative production technology available on the market. CAREL and its subsidiaries/affiliates nonetheless cannot guarantee that all the aspects of the product and the software included with the product respond to the requirements of the final application, despite the product being developed according to start-of-the-art techniques. The customer (manufacturer, developer or installer of the final equipment) accepts all liability and risk relating to the configuration of the product in order to reach the expected results in relation to the specific final installation and/or equipment. CAREL may, based on specific agreements, act as a consultant for the successful commissioning of the final unit/application, however in no case does it accept liability for the correct operation of the final equipment/system. The CAREL product is a state-of-the-art product, whose operation is specified in the technical documentation supplied with the product or can be downloaded, even prior to purchase, from the website www.carel.com. Each CAREL product, in relation to its advanced level of technology, requires setup/configuration/programming/commissioning to be able to operate in the best possible way for the specific application. Failure to complete such operations, which are required/indicated in the user manual, may cause the final product to malfunction; CAREL accepts no liability in such cases. Only qualified personnel may install or carry out technical service on the product.

The customer must only use the product in the manner described in the documentation relating to the product. In addition to observing any further warnings described in this manual, the following warnings must be heeded for all CAREL products:

- prevent the electronic circuits from getting wet. Rain, humidity and all types of liquids or condensate contain corrosive minerals that may damage the electronic circuits. any case, the product should be used or stored in environments that comply with the temperature and humidity limits specified in the manual;
- do not install the device in particularly hot environments. Too high temperatures may reduce the life of electronic devices, damage them and deform or melt the plastic parts. In any case, the product should be used or stored in environments that comply with the temperature and humidity limits specified in the manual;
- do not attempt to open the device in any way other than described in the manual.
- do not drop, hit or shake the device, as the internal circuits and mechanisms may be irreparably damaged;
- do not use corrosive chemicals, solvents or aggressive detergents to clean the device;
- do not use the product for applications other than those specified in the technical manual.

All of the above suggestions likewise apply to the controllers, serial cards, programming keys or any other accessory in the CAREL product portfolio.

CAREL adopts a policy of continual development. Consequently, CAREL reserves the right to make changes and improvements to any product described in this document without prior warning. The technical specifications shown in the manual may be changed without prior warning. The liability of CAREL in relation to its products is specified in the CAREL general contract conditions, available on the website www.carel.com and/or by specific agreements with customers; specifically, to the extent where allowed by applicable legislation, in no case will CAREL, its employees or subsidiaries/affiliates be liable for any lost earnings or sales, losses of data and information, costs of replacement goods or services, damage to things or people, downtime or any direct, indirect, incidental, actual, punitive, exemplary, special or consequential damage of any kind whatsoever, whether contractual, extra-contractual or due to negligence, or any other liabilities deriving from the installation, use or impossibility to use the product, even if CAREL or its subsidiaries/affiliates are warned of the possibility of such damage.

## ATTENTION

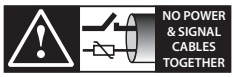


READ CAREFULLY IN THE TEXT!

Separate the probe cables and the digital input cables as much as possible from the inductive load and power cables to prevent possible electro-magnetic interference. Never introduce power cables and signal cables (including those of electric control board) into the same cable troughs.

## DISPOSAL

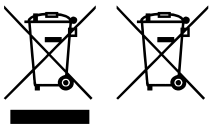

Fig. 1 Fig.2

## DISPOSAL: INFORMATION TO USERS

**Please read and keep.**

With reference to European Union directive 2012/19/EU issued on 4 July 2012 and related national legislation, please note that:

1. Waste Electrical and Electronic Equipment (WEEE) cannot be disposed of as municipal waste but must be collected separately so as to allow subsequent recycling, treatment or disposal, as required by law;
2. users are required to take Electrical and Electronic Equipment (EEE) at end-of-life, complete with all essential components, to the WEEE collection centres identified by local authorities. The directive also provides for the possibility to return the equipment to the distributor or retailer at end-of-life if purchasing equivalent new equipment, on a one-to-one basis, or one-to-zero for equipment less than 25 cm on their longest side;
3. this equipment may contain hazardous substances: improper use or incorrect disposal of such may have negative effects on human health and on the environment;
4. the symbol (crossed-out wheeled bin – Fig.1) even if, shown on the product or on the packaging, indicates that the equipment must be disposed of separately at end-of-life;
5. if at end-of-life the EEE contains a battery (Fig. 2), this must be removed following the instructions provided in the user manual before disposing of the equipment. Used batteries must be taken to appropriate waste collection centres as required by local regulations;
6. in the event of illegal disposal of electrical and electronic waste, the penalties are specified by local waste disposal legislation.

| | |
|---|---|
| Warranty on materials: | 2 years (from production date, excluding consumables). |
| Approval: | the quality and safety of CAREL S.p.A. products are guaranteed by the ISO 9001 certified design and production system. |

**Key to the symbols:**

**Caution:** to bring critical issues to the attention of those using the product.

**Notice:** to focus attention on important topics; in particular the practical application of the various product functions.

**Caution:** this product is to be integrated and/or incorporated into the final apparatus or equipment. Verification of conformity to the laws and technical standards in force in the country where the final apparatus or equipment will be operated is the manufacturer's responsibility. Before delivering the product, Carel has already completed the checks and tests required by the relevant European directives and harmonised standards, using a typical test setup, which however cannot be considered as representing all possible conditions of the final installation.

## HACCP: CAUTION



Food Safety programs based on procedures such as HACCP and, more generally, certain national regulations, require that the devices used for food storage be periodically checked to ensure that measurement errors are within the limits allowed for the application used. Carel recommends users to follow, for example, the indications of the European standard "Temperature recorders and thermometers for the transport, storage and distribution of chilled, frozen, deep-frozen/ quick-frozen food and ice cream - PERIODIC VERIFICATION", EN 13486 - 2001 (or subsequent updates) or similar regulations and provisions in force in the country in question. Further information can be found in the manual regarding the technical characteristics, correct installation and configuration of the product.

# Index


**1. Introduction ..... 7**
1.1 Functions and main features ..... 7
1.2 Models and accessories ..... 8

**2. Installation ..... 10**
2.1 Warnings ..... 10
2.2 Small version for front panel mounting ..... 10
2.3 Large version for front panel mounting ..... 11
2.4 Description of the terminals ..... 13
2.5 Probe connections ..... 14
2.6 Connection diagrams ..... 14
2.7 Positioning inside the panel ..... 15
2.8 Electrical installation ..... 15
2.9 Serial port connections ..... 16
2.10 Installation ..... 16

**3. Configuration tools ..... 16**
3.1 Applica and Controlla apps ..... 16
3.2 Applica Desktop ..... 17

**4. User interface ..... 18**
4.1 Introduction ..... 18
4.2 User terminal ..... 19
4.3 Navigation modes ..... 20

**5. Configuration wizard ..... 25**
5.1 Wizard from the user terminal ..... 25
5.2 Wizard from the Applica app ..... 26

**6. initial configuration ..... 27**
6.1 Description of the initial configuration parameters ..... 27
6.2 Set date/time and time bands ..... 28
6.3 Checks after configuration ..... 28
6.4 Device security against undesired changes ..... 29
6.5 Upgrading the device software ..... 30

**7. Functions ..... 31**
7.1 ON/OFF ..... 31
7.2 Inputs and outputs ..... 32
7.3 Digital inputs ..... 34
7.4 Digital outputs ..... 37
7.5 Control ..... 40
7.6 Control modes ..... 42
7.7 Night-time operation ..... 44
7.8 ECO operation ..... 45
7.9 Continuous cycle ..... 46
7.10 Custom set points ..... 46
7.11 Compressor ..... 46
7.12 Defrost ..... 48
7.13 Evaporator fans ..... 55
7.14 Condenser fans ..... 57
7.15 Humidity management ..... 57
7.16 Light management ..... 61
7.17 Door management ..... 61
7.18 Door - light interactions ..... 62
7.19 Curtain management ..... 62
7.20 Generic functions ..... 62
7.21 Anti-sweat heater or fan ..... 64
7.22 Gasket heater ..... 64
7.23 Condensate drain pan heater ..... 65
7.24 Anti-heating ..... 65
7.25 High and low voltage protection (HLVP) ..... 65
7.26 Zero crossing ..... 66

**8. Parameter table ..... 66**
8.1 Parameter table ..... 66
8.2 Configuring the iJW controller via the Applica app ..... 71

**9. Technical specifications ..... 73**
9.1 Connector/cable table ..... 74

**10. Alarms and signals ..... 75**
10.1 Signals ..... 75
10.2 Types of alarms ..... 75
10.3 Alarm table ..... 76
10.4 Low and high temperature alarms LO and HI ..... 78
10.5 HACCP alarms (HACCP = Hazard Analysis and Critical Control Point) ..... 79
10.6 Dirty condenser alarm ..... 80
10.7 Frost protection alarm ..... 80
10.8 Refrigerant leak alarm rSF ..... 81
10.9 Maintenance alarm ..... 81

**11. LOGS ..... 82**
11.1 Periodic logs ..... 82
11.2 Event logs ..... 82

**12. Appendix ..... 83**
12.1 ir33 and IJ parameter compatibility table ..... 83
12.2 Input/output configuration procedure ..... 84
12.3 Setting the default parameters/loading the parameter sets ..... 85
12.4 Copy configuration parameters ..... 86
12.5 List of available configurations and related connections ..... 87

**13. Release notes ..... 100**

# 1. INTRODUCTION

iJW is the range of CAREL electronic controllers designed for commercial refrigeration food storage and display applications. The range comprises SMALL and LARGE formats, which differ in terms of the number of inputs/outputs and buttons available. All models come with 115 - 230 Vac switching power supply and NFC (Near Field Communication) connectivity. All standard iJW display interfaces use backlit buttons with a capacitive touch screen.
A vast catalogue of options for integration into the device is available across the entire iJW range:

- Bluetooth™ to interact in real time with the chiller and access the data logs stored on the controller. Bluetooth™ antenna for connection to the Applica (service) and Controlla (end user) apps.
- Modbus over RS485 for connection to Carel or third-party supervisory systems (no external converter needed). Carel protocol available on specific models.
- Modbus over TTL for connection to Carel or third-party supervisory systems (with external converter). Carel protocol available on specific models.
- Humidity input to directly read a 0-5 V ratiometric humidity probe.
- Safety package with compressor protection against high and low power supply voltages (HLVP) and zero crossing function for the relays.
- RTC clock

The entire iJW range is integrated into the following CAREL support software and apps:

- Applica Desktop software for OEM technical departments; connection via RS485, BMS or DI2 port with specific converters.
- Applica for technical service in the field; local connection via NFC and BT.
- Controlla app for end users; local connection via BT.

## 1.1 Functions and main features

The functions and most of the parameters available on the iJW range are mainly derived from the Carel ir33+ range. In addition to these, the following functions have been added:

- Configuration wizard from user terminal or Applica app.
- Read/write parameters via NFC (replacing the programming key).
- Temperature control in the dead band.
- Defrost condensate drain heater.
- Fan cycles to avoid air stratification.
- Fan management for humidity levels (no dedicated probe needed).
- Door gasket heater.
- High and low power supply voltage detection.
- Refrigeration system failure alarm (rSF).

The iJW range has been designed to offer maximum flexibility through the use of modular hardware.
Main features of the basic versions:

- SMALL models, 4 inputs and 2/4 relays.
- LARGE models, 5 inputs and 6 relays.
- Panel version with built-in display.
- 115-230 Vac +-10% (90-264 Vac) switching power supply.
- NFC connectivity.

Fully-integrated options:

- Bluetooth™ (with real time clock).
- Real time clock
- 1 RS485 serial port with Modbus supervisor protocol (Carel protocol available on specific models).
- 1 TTL serial port with Modbus supervisor protocol (Carel protocol available on specific models).
- 1 modulating output (0-10V/PWM) (*)
- 1 x 0-5 V ratiometric input (*)
- Compressor protection against high and low power supply voltages (HLVP) and zero crossing function for the relays.

(*) versions are mutually exclusive

## 1.2 Models and accessories

The iJW controllers have different features, based on the model, as indicated by the four digits in the table. These features include the number of relays, the connectivity options, RTC, serial connection via BMS RS485 or TTL port and the 0-5 Vrat humidity probe.

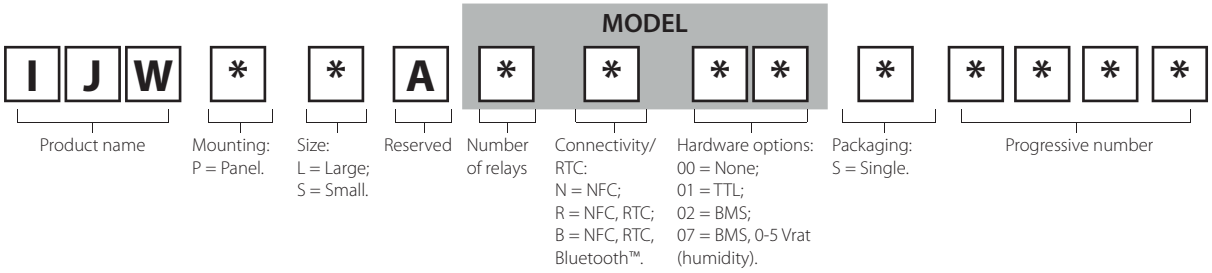


Tab. 1.a

**Notice**: the Carel protocol is only available on some specific models for retrofits, identified by the C CAREL icon on the packaging.

Contact CAREL for details on the complete product part numbers available and the corresponding technical specifications. Below are the features of the iJW models, divided by format.

### 1.2.1 SMALL controllers

FRONT PANEL mounting with built-in display



Fig. 1.a

| P/N (first 6 digits) | Description |
|---|---|
| IJWPSA | Basic features:<br>• switching power supply, 115-230 Vac with high and low voltage detection;<br>• NFC;<br>• 2 probe inputs, 1 digital input, 1 multifunction input;<br>• 2 or 4 relays (2HP 8A or 5A 5A 2HP 8A, according to the model);<br>• plug-in terminals;<br>• single pack;<br>• black faceplate;<br>• white digits;<br>• 6 backlit touch buttons.<br>Optional features:<br>• Bluetooth™ with RTC;<br>• RTC;<br>• HLVP, ZC (see the corresponding chapter for correct use);<br>• 1 RS485 serial port for supervision.<br>Mutually-exclusive options:<br>• 1 x 0-5 V ratiometric input;<br>• 1 TTL serial port. |

Tab. 1.b

### 1.2.2 LARGE controllers

FRONT PANEL mounting with built-in display



Fig. 1.b

| P/N (first 6 digits) | Description |
|---|---|
| IJWPLA | Basic features:<br>• switching power supply, 115-230 Vac with high and low voltage detection;<br>• NFC;<br>• 3 probe inputs, 1 digital input, 1 multifunction input;<br>• max 6 relays (30A 16A 8A 8A 8A 8A);<br>• plug-in terminals;<br>• single pack;<br>• black faceplate;<br>• white digits;<br>• 8 backlit touch buttons.<br>Optional features:<br>• Bluetooth™ with RTC;<br>• RTC;<br>• HLVP, ZC (see the corresponding chapter for correct use);<br>• 1 RS485 serial port for supervision.<br>Mutually-exclusive options:<br>• 1 x 0-5 V ratiometric input;<br>• 1 TTL serial port. |

Tab. 1.c

## 1.2.3 Accessories

**Notice**: This list of ACCESSORY part numbers is updated as of the release date of this manual; please contact CAREL for any additional part numbers available.

Connector kit



Fig. 1.c

| P/N | Description |
|---|---|
| BXOPZB35002B1 | plug-in connector kit, 2 pins, 3.5 mm pitch, black (10 pcs) |
| BXOPZB35003B1 | plug-in connector kit, 3 pins, 3.5 mm pitch, black (10 pcs) |
| BXOPZB38102G1 | plug-in connector kit, 2 pins, 3.81 mm pitch, green (10 pcs) |
| BXOPZB38104G1 | plug-in connector kit, 4 pins, 3.81 mm pitch, green (10 pcs) |
| BXOPZB38105G1 | plug-in connector kit, 5 pins, 3.81 mm pitch, green (10 pcs) |
| BXOPZB50802O1 | plug-in connector kit, 2 pins, 5.08 mm pitch, orange (10 pcs) |
| BXOPZB50803G1 | plug-in connector kit, 3 pins, 5.08 mm pitch, green (10 pcs) |
| BXOPZB50805G1 | plug-in connector kit, 5 pins, 5.08 mm pitch, green (10 pcs) |
| BXOPZB50807G1 | plug-in connector kit, 7 pins, 5.08 mm pitch, green (10 pcs) |

Tab. 1.d

Fixing brackets



Fig. 1.d

| P/N | Description |
|---|---|
| BXOPZMBRC0002 | bracket kit for panel version, multiple pack (20 pcs) |

Tab. 1.e

Converters



Fig. 1.e

| P/N | Description |
|---|---|
| BXOPZIOWD0000 | USB to 1-wire converter for digital input (DI2) |
| BXOPZI4850000 | RS485 converter for TTL serial port |
| CVSTDUMOR0 | USB/RS485 converter |

Tab. 1.f

## 1.2.4 Temperature sensors



Fig. 1.f

| P/N | Type | Description | Range |
|---|---|---|---|
| NTC***HP0* | 10 kΩ±1%@25 °C, IP67 β 3435 | Temperature probe | -50 to 50 °C (105°C in air) |
| NTC***HF01 | 10 kΩ±1%@25 °C, IP67 β 3435 | Evaporator outlet temperature probe | -50 to 90°C strap-on |
| PT1060HP01 | PT1000 Class B, IP67 | Temperature probe | -50T105°C in air |
| PT1***HF01 | PT1000 Class B, IP67 | Evaporator outlet temperature probe | 50T105°C in air |
| DPRC* | NTC 10KΩ@25°C β3435 - 0 to 5 Vdc | Ambient temperature and humidity probe | -10T60°C - 10-90% U.R |

**Notice**: see manuals +040010025 (ITA- ENG) /+040010026 (FRE-GER) for guidelines on installing the sensors on the unit.

Installation example with one evaporator

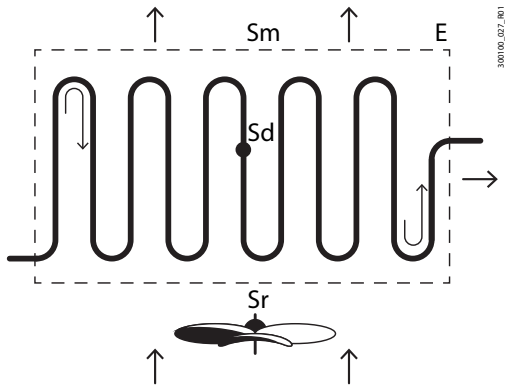


Fig. 1.g

**Key:**

| Code | Description |
|---|---|
| Sm | Air off probe |
| Sr | Air on probe |
| Sd | Defrost probe |
| E | Evaporator |

Tab. 1.g

# 2. INSTALLATION

## 2.1 Warnings

**Caution**: avoid installing the controller in environments with the following characteristics:

- temperature and humidity that do not comply with the ambient operating conditions (see "Technical specifications");
- strong vibrations or knocks;
- exposure to water sprays or condensate;
- exposure to aggressive and polluting atmospheres (e.g.: sulphur and ammonia gases, saline mist, smoke) which may cause corrosion and/or oxidation;
- strong magnetic and/or radio frequency interference (thus avoid installation near transmitting antennae);
- exposure to direct sunlight and the elements in general;
- wide and rapid fluctuations in ambient temperature;
- exposure of the controller to dust (formation of corrosive patina with possible oxidation and reduction of insulation);

## 2.2 Small version for front panel mounting

### 2.2.1 Dimensions mm (inch)

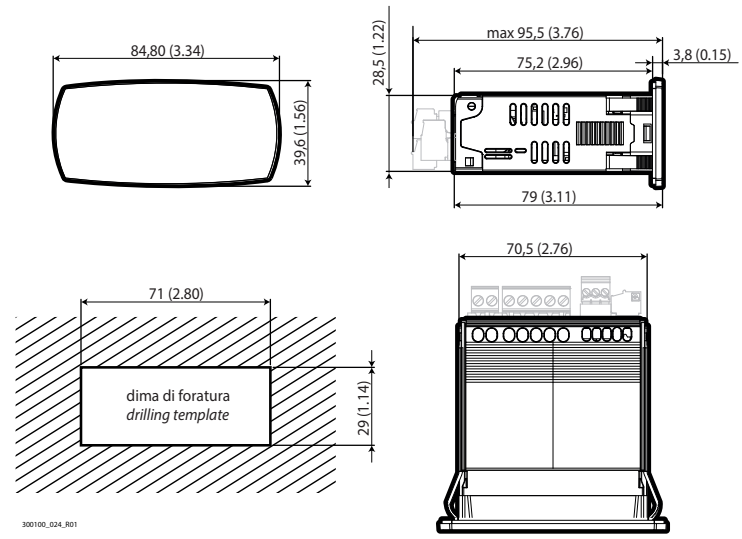


Fig. 2.a

### 2.2.2 Assembly

**Caution**: before carrying out any maintenance, disconnect the controller from the power supply by moving the main system switch to "off".

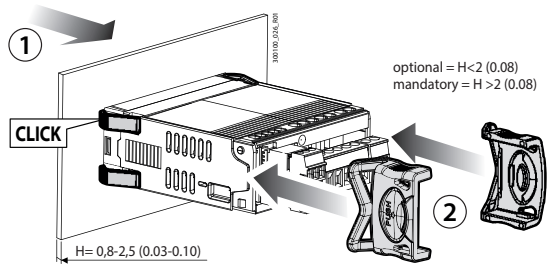


Fig. 2.b

1. Place the controller in the opening, pressing lightly on the side anchoring tabs.
2. Then press on the front until fully inserted (the side tabs will bend, and the catches will attach the controller to the panel, up to a maximum thickness of 2 mm).
3. If necessary, fit the fixing brackets.

**Caution**: IP65 front protection is guaranteed only if the following conditions are met:

- maximum deviation of the rectangular opening from flat surface: ≤ 0.5 mm (0.02 in);
- thickness of the electrical panel sheet metal: 0.8-2 mm (0.03-0.1 in); for thicknesses from 2-2.5 mm (0.08-0.10 in), the optional fixing brackets are required;
- maximum roughness of the surface where the gasket is applied: ≤ 120 µm.

**Notice**: the thickness of the sheet metal (or material) used to make the electrical panel must be adequate to ensure safe and stable mounting of the product (0.8-2.5 mm / 0.03-0.10 in).

### 2.2.3 Removal

**Caution**: before carrying out any maintenance, disconnect the controller from the power supply by moving the main system switch to "off".

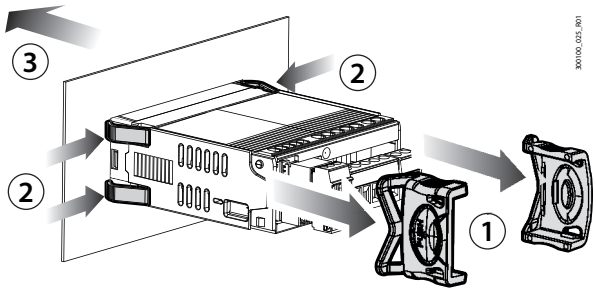


Fig. 2.c

Open the electrical panel and from the rear:

1. remove the fixing brackets (if fitted);
2. gently press the side anchoring tabs on the controller;
3. exert slight pressure on the controller until it is removed.

## 2.3 Large version for front panel mounting

### 2.3.1 Dimensions - mm (in)

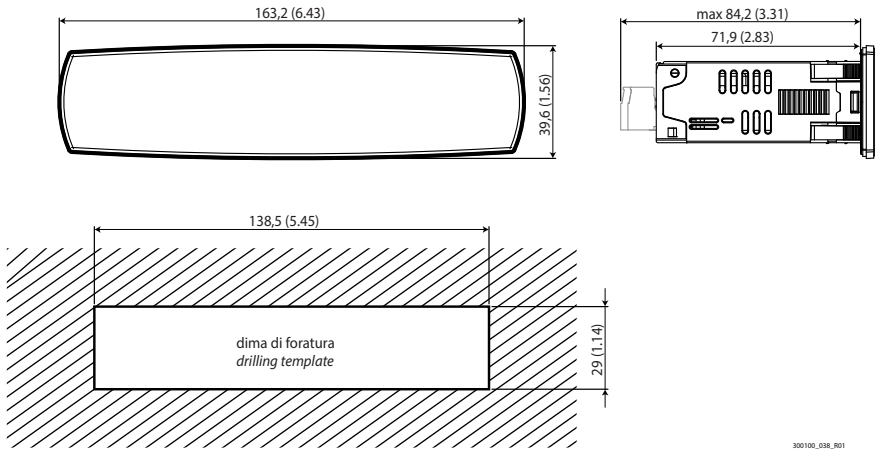


Fig. 2.d

## 2.3.2 Assembly

**Caution**: before carrying out any maintenance, disconnect the controller from the power supply by moving the main system switch to "off".

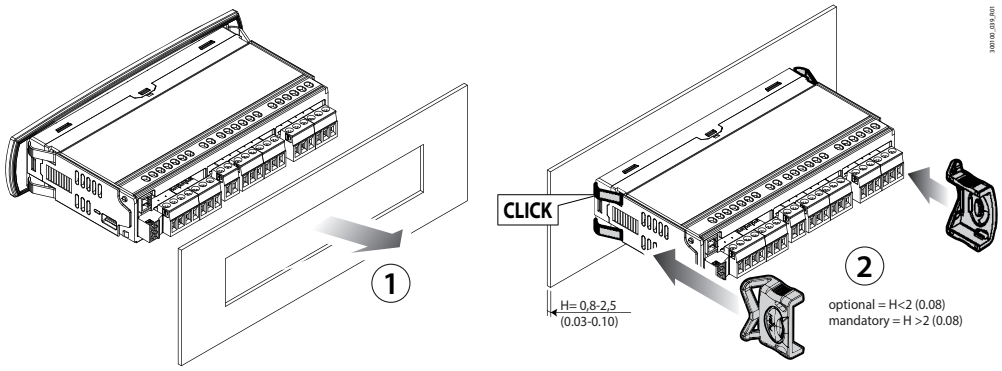


Fig. 2.e

1. Place the controller in the opening, pressing lightly on the side anchoring tabs.
2. Then press on the front until fully inserted (the side tabs will bend, and the catches will attach the controller to the panel, up to a maximum thickness of 2 mm).
3. If necessary, fit the fixing brackets.

**Caution**: IP65 or IP43 front protection (with or without fixing brackets, respectively) is guaranteed only if the following conditions are met:

- maximum deviation of the rectangular opening from flat surface: ≤ 0.5 mm (0.02 in);
- thickness of the electrical panel sheet metal: 0.8-2 mm (0.03-0.1 in); for thicknesses from 2-2.5 mm (0.08-0.10 in), the optional fixing brackets are required;
- maximum roughness of the surface where the gasket is applied: ≤ 120 µm.

**Notice**: the thickness of the sheet metal (or material) used to make the electrical panel must be adequate to ensure safe and stable mounting of the product (0.8-2.5 mm / 0.03-0.10 in).

## 2.3.3 Removal

**Caution**: before carrying out any maintenance, disconnect the controller from the power supply by moving the main system switch to "off".

Open the electrical panel and from the rear:

1. remove the fixing brackets (if fitted);
2. gently press the side anchoring tabs on the controller;
3. exert slight pressure on the controller until it is removed.

## 2.4 Description of the terminals

Small model

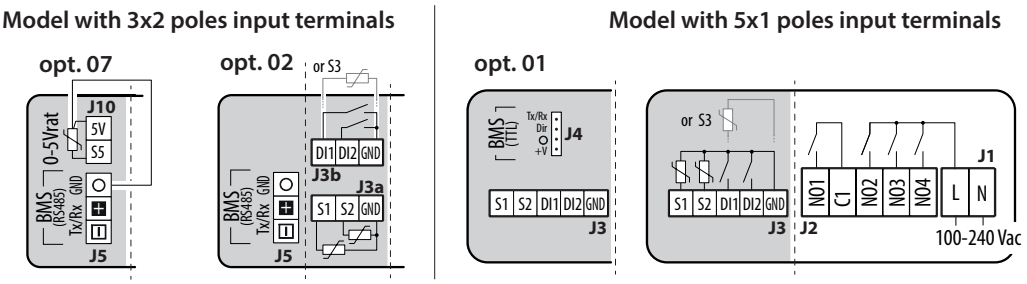


Fig. 2.f

| Ref. | Description | |
|---|---|---|
| J1 | L | Power supply |
| | N | |
| J2 | NO1 | Digital output (relay) 1 |
| | C1 | Common for relay 1 |
| | NO2 | Digital output (relay) 2 |
| | NO3 | Digital output (relay) 3 |
| | NO4 | Digital output (relay) 4 |
| J3, J3a, J3b | S1 | Analogue input 1 (NTC, PTC or PT1000, NTC_HT and NTC_LT) |
| | S2 | Analogue input 2 (NTC, PTC or PT1000, NTC_HT and NTC_LT) |
| | DI1 | Digital input 1/Analogue input 3 (NTC, PTC or PT1000, NTC_HT and NTC_LT) |
| | DI2 | Digital input 2 |
| | GND | GND: reference for probes, digital inputs and analogue outputs |

| Ref. | Description | |
|---|---|---|
| J4 | Tx/Rx | TTL port: Tx/Rx |
| | Dir | TTL port: Dir |
| | O | TTL port: GND |
| | +V | TTL port: +V |
| J5 | - | BMS serial port (RS485): Rx-/Tx- |
| | + | BMS serial port (RS485): Rx+/Tx+ |
| | O | BMS serial port (RS485): GND |
| J10 | 5V | Ratiometric probe power supply |
| | S5 | Analogue input 5 (ratiometric probe) |

Tab. 2.h

Large model

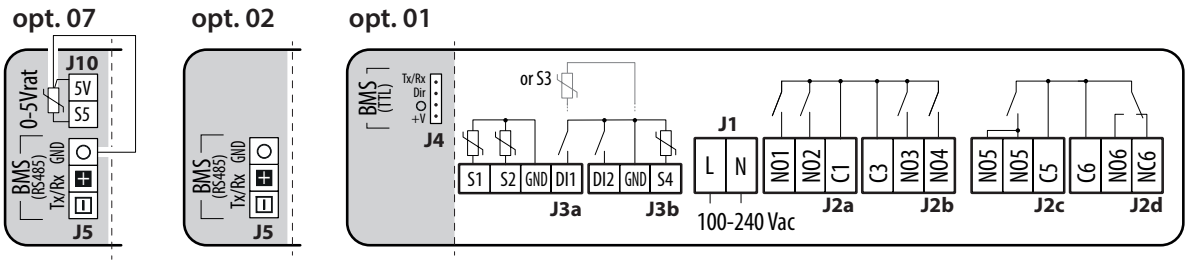


Fig. 2.g

| Ref. | Description | |
|---|---|---|
| J1 | L | Power supply |
| | N | |
| J2a | NO1 | Digital output (relay) 1 |
| | NO2 | Digital output (relay) 2 |
| J2b | C3 | Common for relay 3.4 |
| | NO3 | Digital output (relay) 3 |
| | NO4 | Digital output (relay) 4 |
| J2c | NO5 | Digital output (relay) 5 |
| | C5 | Common for relay 5 |
| J2d | C6 | Common for relay 6 |
| | NC6 | Digital output (relay) 6, normally-closed contact |
| | NO6 | Digital output (relay) 6, normally-open contact |
| J3a | S1 | Analogue input 1 (NTC, PTC, PT1000, NTC_HT and NTC_LT) |
| | S2 | Analogue input 2 (NTC, PTC, PT1000, NTC_HT and NTC_LT) |

| Ref. | Description | |
|---|---|---|
| J3a | GND | GND: reference for probes, digital inputs and analogue outputs |
| | DI1 | Digital input 1/Analogue input 3 (NTC, PTC, PT1000, NTC_HT and NTC_LT) |
| J3b | DI2 | Digital input 2 |
| | GND | GND: reference for probes, digital inputs and analogue outputs |
| | S4 | Analogue input 4 (NTC, PTC, PT1000, NTC_HT and NTC_LT) |
| J4 | Tx/Rx | TTL port: Tx/Rx |
| | Dir | TTL port: Dir |
| | O | TTL port: GND |
| | +V | TTL port: +V |
| J5 | - | BMS serial port (RS485): Rx-/Tx- |
| | + | BMS serial port (RS485): Rx+/Tx+ |
| | O | BMS serial port (RS485): GND |
| J10 | 5V | Ratiometric probe power supply |
| | S5 | Analogue input 5 (ratiometric probe) |

Tab. 2.i

## 2.5 Probe connections

Notice:
- the probe connections relate to the default parameter configuration;
- probes S1, S2, S3 can be configured as NTC, PTC, PT1000, NTC_HT or NTC_LT;
- the temperature probes must all be the same type.

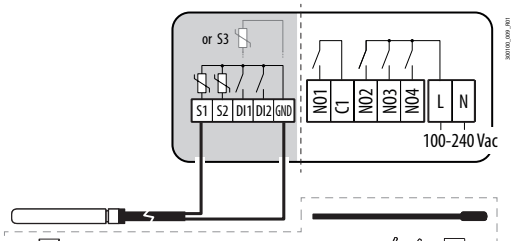


Fig. 2.h

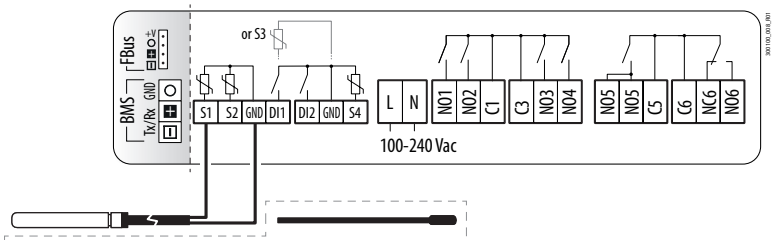


Fig. 2.i

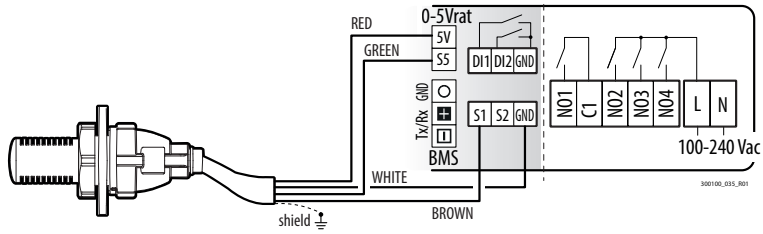


Fig. 2.j

## 2.6 Connection diagrams

Notice: the "Applica" app and the Applica Desktop software (see the "Configuration tool" chapter) can be used to change the configuration of the probes without needing to rewire or change the assignment of the relays to specific functions, thus taking advantage of different capacities when needed.

Below are two examples of wiring diagrams for the small and large iJW controllers. See the Appendix for the complete list of available configurations and corresponding connections.

### 2.6.1 Small model

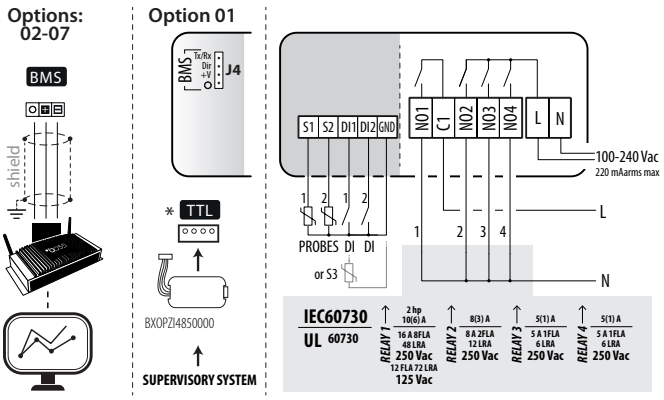


Fig. 2.k

### 2.6.2 Large model

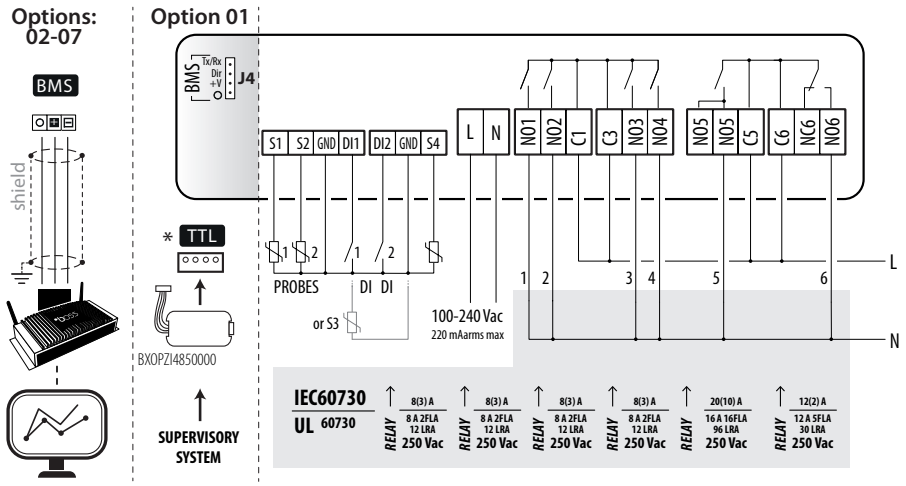


Fig. 2.l

## 2.7 Positioning inside the panel

The position of the controller in the electrical cabinet must be chosen so as to guarantee correct physical separation from the power components (solenoids, contactors, actuators, inverters, ...) and the connected cables. Proximity to such devices/cables may create random malfunctions that are not immediately evident. The structure of the panel must allow the correct flow of cooling air.

## 2.8 Electrical installation

**Caution**: when laying the wiring, "physically" separate the power part from the control part. The proximity of these two sets of wires will, in most cases, cause problems of induced disturbance or, over time, malfunctions or damage to the components. The ideal solution is to house these two circuits in two separate cabinets. Sometimes this is not possible, and therefore the power part and the control part must be installed in two separate areas inside the same panel.

For the control signals, it is recommended to use shielded cables with twisted wires. If the control cables have to cross over the power cables, the intersections must be as near as possible to 90 degrees, always avoiding running the control cables parallel to the power cables.

Pay attention to the following warnings:

- use cable ends suitable for the corresponding terminals. Loosen each screw and insert the cable ends, then tighten the screws. When the operation is completed, slightly tug the cables to check they are sufficiently tight;
- Separate as much as possible the probe signal, digital input and serial line cables from the cables carrying inductive loads and power cables to avoid possible electromagnetic disturbance. Never run power cables (including the electrical cables) and probe signal cables in the same conduits. Do not install the probe cables in the immediate vicinity of power devices (contactors, circuit breakers or similar);
- Reduce the path of the probe cables as much as possible, and avoid spiral paths that enclose power devices;
- Avoid touching or nearly touching the electronic components fitted on the boards to avoid electrostatic discharges (extremely damaging) from the operator to the components;
- Do not secure the cables to the terminals by pressing the screwdriver with excessive force, to avoid damaging the controller: maximum tightening torque: 0.22-0.25 N•m.
- For applications subject to considerable vibrations (1.5 mm pk-pk 10/55 Hz), secure the cables connected to the controller around 3 cm from the connectors using cable ties;
- All the extra low voltage connections (analogue and digital inputs, analogue outputs, serial bus connections, power supplies) must have reinforced or double insulation from the mains network.

## 2.9 Serial port connections

For serial connections (FieldBus and BMS ports), the cables used must be suitable for the RS485 standard (shielded twisted pair, see the specifications in the following table).

| Main device | Serial port | Lmax (m) | Wire/wire capacitance (pF/m) | Resistance on last device | Max secondary devices on bus | Data rate (bit/s) |
|---|---|---|---|---|---|---|
| PC (supervision) | BMS | 500 | <90 | 120 Ω | - | 19200 (*) |
| PC (supervision) | TTL | 2 | <90 | - | - | 19200 (*) |

Tab. 2.j

(*) modifiable by parameter.

**Caution**: connect the shield to the GND of the control, do not connect GND to earth. Connect a 120 Ω terminating resistor between the Tx/Rx+ and Tx/Rx- terminals on the last controller on the RS485 line.

## 2.10 Installation

For installation proceed as follows, with reference to the wiring diagrams:

- before performing any operations on the control board, disconnect the main power supply by turning the main switch in the electrical panel OFF;
- avoid touching the control board, as electrostatic discharges may damage the electronic components;
- the index of protection required for the application must be ensured by the manufacturer of the cabinet or by suitable assembly of the controller;
- connect any digital inputs, Lmax = 10 m;
- connect the actuators: the actuators should only be connected after having programmed the controller. Carefully evaluate the maximum ratings of the relay outputs as indicated in "Controller electrical and physical specifications";
- program the controller: see "User interface";
- for safety devices (e.g. circuit breakers), comply with the following requirements:
  - IEC 60364-4-41;
  - standards in force in the country;
  - connection technical requirements of the power company.

**Caution**: the following warnings must be observed when connecting the controllers:

- incorrect connection to the power supply may seriously damage the controller;
- use cable ends suitable for the corresponding terminals. Loosen each screw and insert the cable ends, then tighten the screws and lightly tug the cables to check correct tightness;
- separate as much as possible the probe and digital input cables from cables to inductive loads and power cables, so as to avoid possible electromagnetic disturbance. Never run power cables (including the electrical panel cables) and probe signal cables in the same conduits;
- do not install the probe cables in the immediate vicinity of power devices (contactors, circuit breakers, etc.). reduce the path of probe cables as much as possible, and avoid spiral paths that enclose power devices.

# 3. CONFIGURATION TOOLS

## 3.1 Applica and Controlla apps

The Carel apps can be used to configure the controller from a mobile device (smartphone, tablet), via NFC (Near Field Communication) or BLE (Bluetooth™ Low Energy). Supported devices: Android 7, iOS 11; Bluetooth™ 4.0, and higher.

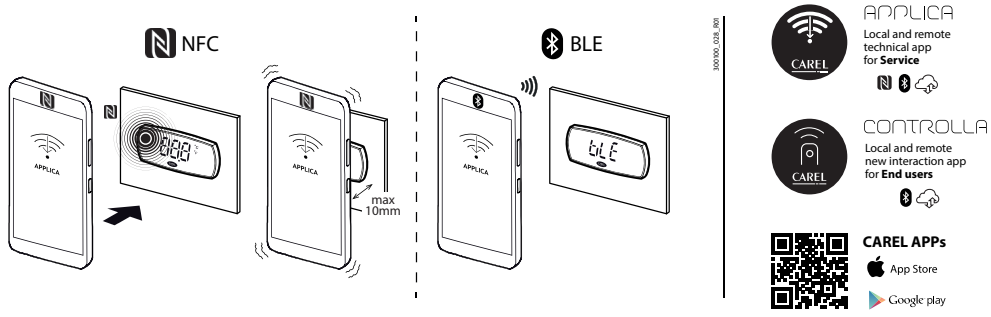


Fig. 3.a

Procedure (modify parameters):
- download the CAREL "Applica" or "Controlla" app from Apple Store or Google Play;
- (on the mobile device) enable NFC and/or Bluetooth™ communication and mobile data;
- open Applica (or Controlla);
- select NFC or Bluetooth™ communication, depending on the iJW model;
- move the mobile device near to the user terminal, maximum distance 10 mm (for NFC only), so as to recognise the configuration;
- select the access profile and enter the required password (*);
- set the parameters as needed;
- move the mobile device near to the user terminal again to upload the configuration parameters (for NFC only).

(*) pre-assigned by the unit manufacturer to allow maintenance only by authorised service technicians, default Applica "22", Controlla "00"

Notice:
- make sure NFC or Bluetooth™ have been enabled. Some smartphones may experience problems if location is not enabled.
- During Bluetooth™ connection, the iJW user terminal is disabled and shows the message "bLE".
- Parameter "nFE" can be used to disable copying the parameters written to the NFC memory to the controller's memory. If nFE = 0, writes to NFC memory are ignored by the controller.

## 3.2 Applica Desktop

Applica Desktop is configuration software for laptops that provides the following functions:
- configure the controller;
- change parameter sets and create custom lists to upload to the device;
- view the trends of physical values in real time, with the possibility to save data in Excel format.

For the electrical connection, use the USB/RS485 converter CVSTDUMOR0 for models equipped with BMS port option.

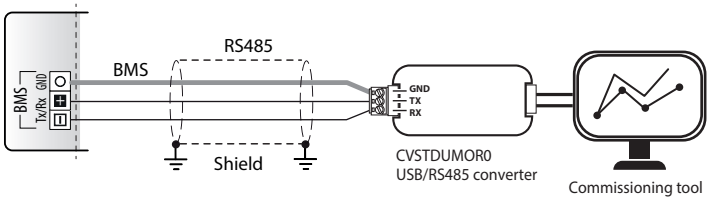


Fig. 3.b

For models without BMS port option, the USB/ID converter BXOPZIOWD000 can be used, connecting to digital input DI2 and completing the specific procedure.

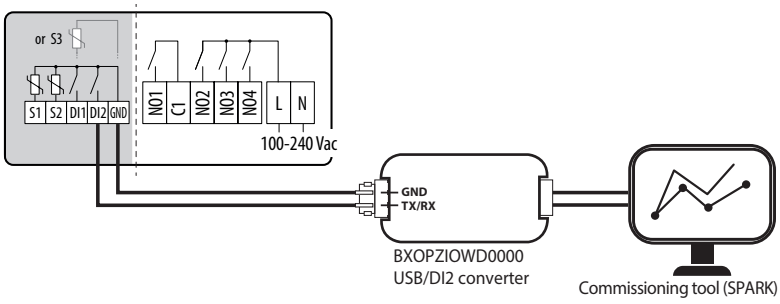


Fig. 3.c

# 4. USER INTERFACE

## 4.1 Introduction

iJW is available in the panel version with front mounting and built-in display; the front panel incorporates the display and the keypad with backlit buttons used to program the controller. The user interface display features three digits with sign for below-zero temperatures and decimal point, a buzzer for signalling alarms and nine icons. The terminal features wireless connectivity and an NFC (Near Field Communication) or Bluetooth™ interface for interaction with mobile devices (on which the CAREL "Applica" app has been installed, available on Google Play for the Android operating system and on Apple store for iOS devices).

**Notice:** for simplicity, the set of parameters accessible from the user interface is a subset of all the parameters available via the Applica app.

The information available on the user terminal may vary according to the parameter configuration set by the manufacturer. The user parameters (U) are accessible without entering a password, while the service parameters (S) can be accessed after entering the service password (default 22). See the parameter table.

**Notice:** the service password can be changed directly by accessing the parameter list in the Applica app, and can contain up to 8 alphanumeric and special characters.

| Code | Description | Def. | Min | Max | UOM | User | User terminal |
|---|---|---|---|---|---|---|---|
| PDS | Service password | 22 | 0 | 999 | - | S | NO |
| PDU | User password | 0 | 0 | 999 | - | U | NO |

Parameter /5 can be set to change the unit of measure of the values shown on the display, while parameter /6 selects whether or not to display the decimal point.

**Notice:** parameter /5 only affects the controller's display and not Applica and the Applica Desktop configuration software, which need to be set accordingly.

| Code | Description | Def. | Min | Max | UOM | User | User terminal |
|---|---|---|---|---|---|---|---|
| /5 | Unit of measure: 0 = °C; 1 = °F | 0 | 0 | 1 | - | U | YES |
| /6 | Display decimal point (main screen only): 0 = visible; 1 = not visible | 0 | 0 | 1 | - | S | YES |

Parameter Hb can be set to enable or disable the buzzer (on models where featured).

| Code | Description | Def. | Min | Max | UOM | User | User terminal |
|---|---|---|---|---|---|---|---|
| Hb | Enable buzzer: 0 = disabled; 1 = enabled | 1 | 0 | 1 | - | U | YES |

Parameter /nE can be used to enable or disable navigation via the user terminal, while parameter BTE can be used to disable Bluetooth™ communication.
Due to its operating characteristics, the NFC memory is always active, while parameter nFE can be used to have the controller ignore writes to NFC memory.

| Code | Description | Def. | Min | Max | UOM | User | User terminal |
|---|---|---|---|---|---|---|---|
| /nE | Enable user terminal navigation: 0 = enabled; 1 = disabled; 2 = On/Off disabled; 3 = On/Off and access to set point disabled. | 0 | 0 | 3 | - | S | NO |
| BtE | Bluetooth™ communication - 0 = Disabled; 1 = Enabled | 1 | 0 | 1 | - | S | NO |
| nFE | Enable copy parameters from NFC memory to controller: 0 = copy parameters disabled; 1 = copy parameters enabled. | 1 | 0 | 1 | - | S | NO |

Parameters /Lb and /Sb can be set to change how the terminal behaves in standby; specifically, /Lb enables or disables the lighting on the status LEDs (icons), including ON/OFF, while /Sb enables or disables the lighting on the PRG button.

| Code | Description | Def. | Min | Max | UOM | User | User terminal |
|---|---|---|---|---|---|---|---|
| /Lb | Status LEDs on in standby (including ON/OFF): 0 = off; 1 = on. | 0 | 0 | 1 | - | S | NO |
| /Sb | PRG button always ON in standby: 0 = off; 1 = on. | 1 | 0 | 1 | - | S | NO |

## 4.2 User terminal



Fig. 4.a

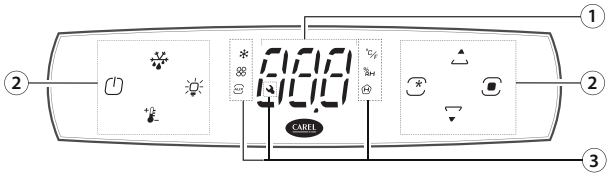

Fig. 4.b

**Key:**

| | |
|---|---|
| 1 | Display |
| 2 | Icons/buttons |
| 3 | Icons |

**Notice:**

- the user terminal can only be used to set the frequent parameters and display the value of the probes connected to iJW. The other parameters are set using the Applica app or the Applica Desktop configuration software, depending on the access profile. See the parameter table and the paragraph "Parameter categories visible on the user terminal";
- Parameter /t1 is used to choose the variable to be shown on the display during normal operation:
- Parameter /5 is used to change the unit of measure .
- Parameter /d6 is used to choose the value to be shown on the display when defrosting:

| Code | Description | Def. | Min | Max | UOM | User | User terminal |
|---|---|---|---|---|---|---|---|
| /5 | Unit of measure: 0 = °C; 1 = °F | 0 | 0 | 1 | - | U | YES |
| /6 | Display decimal point: 0 = Yes; 1 = No | 0 | 0 | 1 | - | S | NO |
| /t1 | Display on user terminal:<br>0 = Not configured \| 4 = value of S4 \| 10 = virtual probe<br>1 = value of S1 \| 5 = value of S5 \| 11 to 14 = not available<br>2 = value of S2 \| 6 to 8 = not available \| 15 = actual control set point<br>3 = value of S3 \| 9 = control probe | 9 | 0 | 15 | - | S | NO |
| d6 | Display on terminals during defrost:<br>0 = temperature alternating with 'dEF'; \| 1 = freeze display; \| 2 = 'dEF' | 1 | 0 | 2 | - | U | NO |

Tab. 4.a

### Keypad

| Icon/button | Description | On | Flashing |
|---|---|---|---|
| | Defrost | Active / can be deactivated from the keypad | Waiting / can be activated from the keypad |
| | On/Off | • Command activation: on / can be switched off from the keypad<br>• Return to the previous level in the parameters menu | Off / can be switched on from the keypad |
| | Set point | Access to temperature / humidity set point | - |
| | Light | Active / can be deactivated from the keypad | Waiting / can be activated from the keypad |
| | UP arrow | • Decrease value or scroll menu<br>• Auxiliary function: active / can be deactivated from the keypad | Auxiliary function: waiting / can be activated from the keypad |
| | Programming (PROG) | **Pressed briefly:**<br>• activate buttons<br>• enter menu branch<br>• Save value and return to the parameter code<br><br>**Pressed and held (3 s):**<br>• enter programming mode | - |
| | DOWN arrow | • Decrease value or scroll menu<br>• Auxiliary function: active / can be deactivated from the keypad | Auxiliary function: waiting / can be activated from the keypad |
| | Auxiliary function | Active / can be deactivated from the keypad | Waiting / can be activated from the keypad |
| | Compressor | Active | Waiting |
| | Evaporator fan | Active | - |
| AUX | Auxiliary load | Active | - |
| °C/°F | °C/°F | Unit of measure: temperature °C/ °F | - |
| %RH | % rH | Unit of measure: relative humidity % | - |
| | HACCP | Active HACCP alarms | - |
| | Service | Active alarms | - |

Tab. 4.b

**Notice:** during navigation, the buttons will be on/flashing only if enabled.

| Code | Description | Def. | Min | Max | UOM | User | User terminal |
|---|---|---|---|---|---|---|---|
| GF | Custom function associated with the specific button (Large models only):<br>0 = Not configured; 1 = Light; 2 = Auxiliary output; 3 = Continuous cycle. | 3 | 0 | 3 | - | S | YES |
| GF1 | Custom function associated with the UP arrow - see GF | 2 | 0 | 3 | - | S | YES |
| GF2 | Custom function associated with the DOWN arrow - see GF | 1 | 0 | 3 | - | S | YES |

A custom function can be associated with the UP arrow, DOWN arrow and auxiliary function button, choosing between unit On/Off, light on, auxiliary output activation and continuous cycle activation, by setting parameters GF1, GF2 and GF. Parameter GF is available only on Large models and corresponds to the specific button, while parameters GF1 and GF2 are available on all models.

## 4.3 Navigation modes

The iJW controller provides two user terminal operating modes, selected by setting parameter kbM:

- Buttons active, wake up mode.
- Buttons inactive, locked mode.

Wake up is the default mode, i.e. the keypad buttons are active.

| Code | Description | Def. | Min | Max | UOM | User | User terminal |
|---|---|---|---|---|---|---|---|
| kbM | Keypad operating mode: 0 = wake up; 1 = locked | 0 | 0 | 1 | - | S | NO |

### 4.3.1 Wake up mode

In wake up mode, when the terminal is in standby it displays the value of the variable selected by parameter /t1, alternating with any alarms or signals and the status of the loads/functions. As soon as any button is pressed, the terminal is activated (wake up), and the loads and functions can be activated/deactivated by simply pressing the buttons. Press and hold the PROG button to access the parameter programming menu.

The figure shows how to navigate between the screens; specifically, the grey part highlights programming mode, for setting the parameters, accessed by pressing and holding PROG and entering the password (default 22). The screens and functions of the buttons available on each screen are described in detail below.

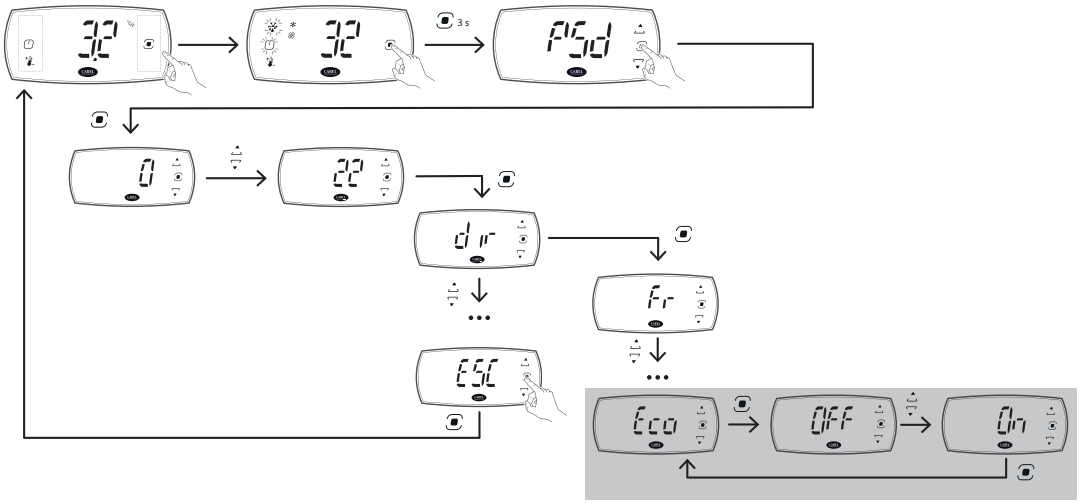


Fig. 4.c

### 4.3.2 Locked mode

In locked mode, when the terminal is in standby it displays the value of the variable selected by parameter /t1, alternating with any alarms or signals. Pressing any button displays the status of the loads and functions. In order to activate/deactivate the loads and functions and access the parameter programming menu, the terminal needs to be unlocked by pressing and holding PROG. The figure shows how to navigate between the screens on the display; specifically, the grey part shows programming mode for setting the user parameters, accessed by pressing and holding PROG. If a User password other than Default 00 has been set, this will need to be entered to access programming mode. To access the Service parameters, go to the "PSD" menu item and enter the password (default 22). The screens and functions of the buttons available on each screen are described in detail below.

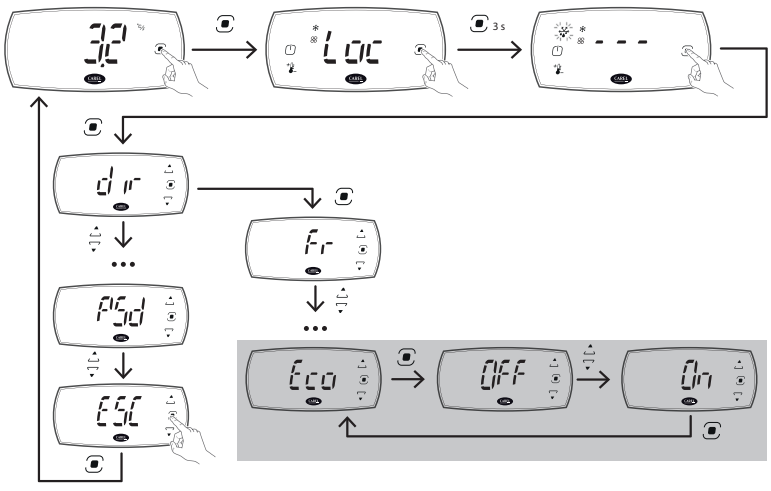


Fig. 4.d

## 4.3.3 Screens

The possible states of the terminal are shown in the table below.

**Wake up mode**



**Status**
Standby/display active loads (wake up mode)

**Description**
The display shows the main value, alternating with any alarms and signals and active functions/actuators.



**Status**
Direct activation of loads and functions from the keypad (wake up mode)

**Description**
The loads can be activated or de-activated and the direct functions accessed from the keypad



**Status**
Unit off (wake up mode)

**Description**
The unit is off and can be switched on by pressing the On/Off button

**Locked mode**



**Status**
In standby (locked mode)

**Description**
The display shows the main value, alternating with any alarms and signals



**Status**
Display active loads (locked mode)

**Description**
The terminal shows any active loads, the keypad is locked

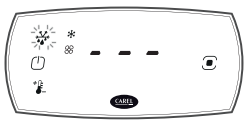

**Status**
Direct activation of loads and functions from keypad (locked mode)

**Description**
The loads can be activated or de-activated and the direct functions accessed from the keypad

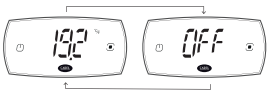

**Status**
Unit off (locked mode)

**Description**
The unit is off and can be switched on by pressing On/Off. The display shows the main value, alternating with the message "Off"

**Wake up + locked mode**



**Status**
Programming menu

**Description**
Scroll the programming menu using the arrow buttons



**Status**
Parameter programming/display values

**Description**
Set the parameters using the arrow buttons or display read-only values



**Status**
Bluetooth™ connection

**Description**
The display is disabled, as the controller is connected to an app via Bluetooth™ Low Energy



**Status**
Initial configuration

**Description**
The controller is awaiting the start of the programming wizard

### Standard display

At power on, the user terminal briefly shows the firmware version and then the standard display. The standard display depends on the setting of parameter /t1:

- control temperature (control probe temperature or calculated based on two probes, see "Functions");
- value of one of the probes connected to the analogue inputs;
- control/virtual probe;
- temperature set point.

**Notice:** if there is an active alarm, press any button to mute the buzzer.

### Display active actuators/functions and direct activation of actuators/functions

If wake up navigation mode has been selected, the standard display also shows the actuators/functions that are active at that moment. Press any button access actuator/function direct activation mode

If locked navigation mode has been selected, the standard display does not show the active actuators/functions. When pressing any button, the display shows the message "Loc" and the icons corresponding to the currently-active actuators/functions come on. On pressing PRG for 3 s, the display shows 3 dashes in sequence and enters actuator/function direct activation mode.

In actuator/function direct activation mode:
- the buttons that are on steady indicate that the corresponding actuator/function is active, and can be deactivated by pressing the button;
- the buttons that are flashing indicate that the actuator/function is not active and can be activated by pressing the button;

When pressing the button, the display shows information on the status of the selected actuator/function (On/Off).

| Icon | iJW small | iJW large | On/Off |
|---|---|---|---|
| | • | • | Defrost |
| | • | • | Unit On/Off |
| | • | • | Direct access to set point |
| | - | • | Lights |
| | • | • | Custom function (parameter GF1) |
| | • | • | Custom function (parameter GF2) |
| | - | • | Custom function (GF parameter) |

Tab. 4.c

**Notice:** if no button is pressed, after 7 seconds the terminal will automatically return to the standard display.

Example of direct activation of the function to modify St (set point) in wake up navigation mode:



4. Wait for the standard display to be shown



5. Press any button to enter display active actuators/functions mode



6. Press the Set point button for 3 s: the screen for setting the set point is displayed



7. Press UP/DOWN to change the value and then press PRG to save the value and return to the menu

**Caution:** if the PRG button is not pressed, the new setting will not be saved.

Example of direct activation of the defrost function in locked navigation mode:



1. Wait for the standard display to be shown

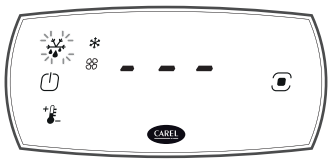

2. Press PRG for 3 s to enter display active actuators/functions mode



3. Press the defrost button to activate the defrost

### 4.3.4 Programming mode

In actuator/function direct activation mode, pressing PRG enters programming mode, where the unit's main operating parameters can be set.

If wake up navigation mode has been selected, after pressing PRG for 3 s the password needs to be entered (default 22).

If, on the other hand, locked navigation mode has been selected, pressing PRG directly accesses the basic configuration parameters, such as direct commands and active alarms without needing to enter the password (if a User password other than the default 00 has been set, the password will need to be entered), or the Service parameters (Service password required). To access the Service parameters, go to the "PSD" menu item (see the table below) and enter the password (default 22).

**Notice:** the main configuration parameters are accessed via the user terminal, for basic configuration of the unit; for fine tuning use Applica, which gives access to all the parameters available for the user profile.

#### Parameter categories visible on the user terminal

The menu items available and parameters visible on the user terminal are listed below. The menu branches/parameters protected by the Service password (default 22) in locked mode are shown in bold italics.

| dir (*) (Direct functions) | CtL (Control) | Pro (Display probes) | dEF (Defrost) | HcP (HACCP) | CnF (Configuration) | cMP (Compressor) | FAn (Fans) | ALM (Alarms) | PSd (***) | ESC |
|---|---|---|---|---|---|---|---|---|---|---|
| See the following table | St | **/5** | **d0** | rHP | Hb | **c0** | **F0** | **A1** | | |
| | **rd** | **/6** | **dI** | HAn | **H0** | **c1** | **F1** | AH/AHA | | |
| | Sth | **/cA** | **dP1** | HFn | **GF1** | **c2** | **F2** | AL/ALA | | |
| | **rdh** | **/cb** | **dt1** | ESC | **GF2** | **c3** | **F3** | Ad | | |
| | **IS** (**) | **/cc** | **d4** | | **GF** | **ESC** | **Fd** | Add | | |
| | **r1** | **/nE** | **d8** | | **bM (****)** | | **Fpd** | rSA | | |
| | **r2** | **/t1** | **dd** | | | | **ESC** | rAL | | |
| | **rn** | **/P1** | **ESC** | | | | | ESC | | |
| | **/4** | **/P2** | | | | | | | | |
| | **rSC** | **ESC** | | | | | | | | |
| | ESC | | | | | | | | | |

Tab. 4.d

(*) The visibility of the direct functions can be set using the corresponding parameters, and depends on whether the functions are available on the controller.
(**) Visible if there is at least one configuration loaded on the controller (see "Appendix")
(***) Visible as a menu item only in locked mode.
(****) Corresponds to parameter kbM

#### Direct functions

| Acr. | Description | Visibility |
|---|---|---|
| BtE | Enable Bluetooth™ | if present |
| CnC | Activate continuous cycle | cc > 0 |
| Eco | Activate Eco mode | |
| Fr | Firmware version | |
| nFE | Enable copy parameters from NFC memory to controller | |

| Acr. | Description | Visibility |
|---|---|---|
| Sd | Defrost probe | /Fb > 0 |
| SHu | Humidity probe | /FP > 0 |
| Sm | Air off probe | /Fa > 0 |
| Sr | Air on probe | /Fc > 0 |

Tab. 4.e

### Procedure

To navigate the menu tree, use the following buttons:

- UP and DOWN to navigate the menu and set the values;
- PRG to enter the menu items and save the changes made;
- Select the menu item or ESC to return to the previous branch.

Example of setting parameter d0 (type of defrost) in wake up navigation mode:



1. Wait for the standard display to be shown



2. Press any button to enter display active actuators/functions mode



3. Press PRG for 3 s to open the password entry screen



4. Press PRG and enter the password using the UP and DOWN arrows



5. Press PRG to enter programming mode; the first category of parameters dir (=direct functions) will be displayed;



6. Press DOWN until reaching the parameter category dEF (Defrost)



7. Press PRG to display the first menu item: d0 (=type of defrost). Press PRG to display the parameter value



8. Press UP/DOWN to change the value and then press PRG to save the value and return to menu item d0

**Caution:** if the PRG button is not pressed, the new setting will not be saved.



9. Press UP/DOWN to select ESC and press PRG to return to the parameter categories



10. Press DOWN to move to the next categories and follow steps 7 to 9 to set the other parameters;



11. Once the settings have been made, to exit the categories select ESC and press PRG.

**Notice:** if no button is pressed, after 20 seconds the terminal will automatically return to the standard display.

### Mobile device and PC

The controller can be configured via NFC (Near Field Communication) or Bluetooth™ from a mobile device (smartphone, tablet) using Applica, or via serial connection (laptop) using the Applica Desktop configuration software. See "Configuration tools".

**Notice:** when changing the parameter settings, it is recommended to power the controller off and on again to realign any timings in progress. Caution: wait at least 5 seconds are changing the parameter settings before powering the controller off, to allow the data to be correctly saved to the memory.

# 5. CONFIGURATION WIZARD

The iJW controller features an advanced configuration "wizard" that, via a guided procedure, helps users to choose a embedded configuration and set the main unit parameters.
The wizard can be run from the user terminal or from the Applica app; in the latter case, the controller can be configured via Bluetooth™ (on models where featured) with the controller powered, or via NFC even without power connected.

## 5.1 Wizard from the user terminal

When first started, the iJW controller shows the message "CFG" on the display, indicating that the configuration wizard needs to be run. On pressing the PRG key the user can decide whether or not to run the wizard, using UP and DOWN to select "yES" (run the wizard) or "no" (skip the wizard), and confirming by pressing PRG again. When running the wizard, one of the embedded configurations on the controller can be selected (see the list of available configurations and corresponding connections in the Appendix) so as to easily set all the main parameters that allow the unit to function. If deciding not to run the wizard, all the unit parameters will need to be set from the user terminal, using the Applica app or the Applica Desktop configuration software.

| Par. | Desc. | | | Def. | Min | Max | UOM | User | User term. |
|---|---|---|---|---|---|---|---|---|---|
| IS | Working configuration | | | 0 | 0 | IS_Max | - | S | YES |
| A5 (wizard only) | Digital input (DI2) configuration: | | | 0 | 0 | 6 | - | U | YES |
| | 0 = Not configured | 3 = NO door switch | 5 = NO remote ON/OFF | | | | | | |
| | 1 = NO external alarm | 4 = NC door switch | 6 = NC remote ON/OFF | | | | | | |
| | 2 = NC external alarm | | | | | | | | |
| /P1 | Configuration of probes S1, S2, S3, S4, B5<br>0 = PT1000; 1 = PTC; 2 = NTC; 3 = NTC-LT; 4 = NTC-HT. | | | 2 | 0 | 4 | - | S | NO |

The procedure for running the wizard from the user terminal is illustrated in the figure. To complete the configuration, the values of the following parameters need to be set:
IS: configuration number;
A5: function and logic (NO/NC) of the digital input;
/P1: type of temperature probes.

The service icon on indicates that one of the wizard parameters has never been displayed; all three parameters must be displayed at least once in order to complete the procedure.

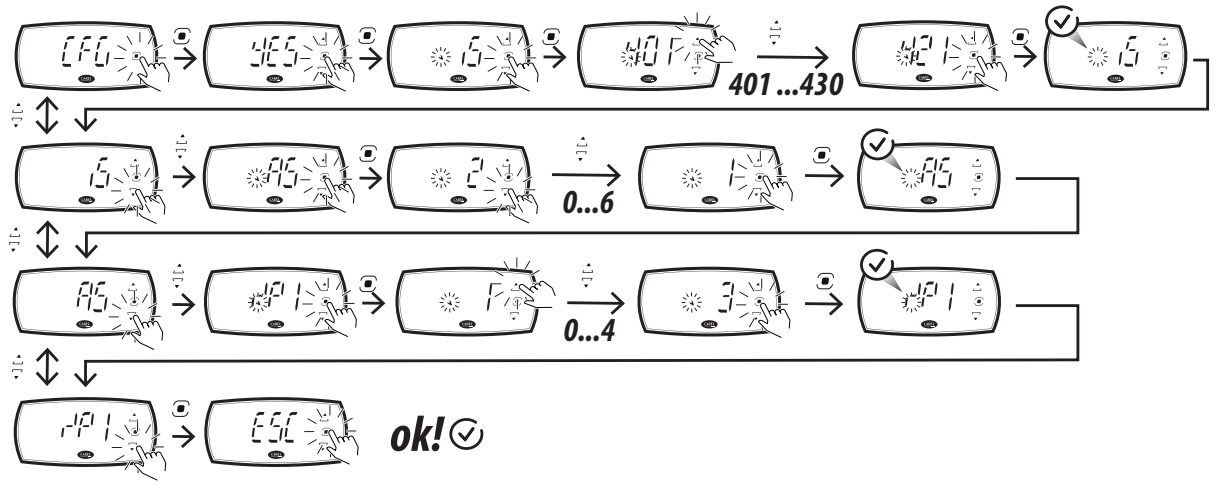


Fig. 5.a

**Notice:** if the procedure is not completed, the values are not saved and the next time the controller is switched on the display repeats the procedure, showing "CFG". Only after completing the procedure or skipping the wizard will the controller show the standard display.

**Caution**: the wizard can be repeated by resetting the controller to the factory values using parameter rSC; in this case, however, all the settings made previously will be lost (unless the parameter configuration has been saved, see the section on Configurations).

## 5.2 Wizard from the Applica app

When connecting via the Applica app to a controller on which the configuration wizard has never been completed or has been skipped, the app proposes the configuration wizard, used to select the desired configuration, set the main parameters and save and share the settings.

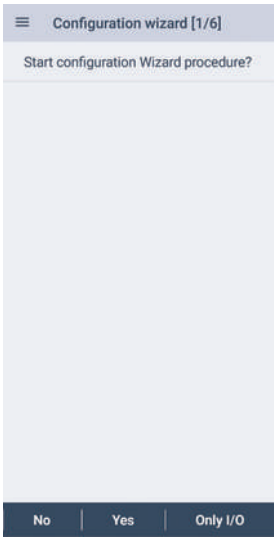


Fig. 5.b

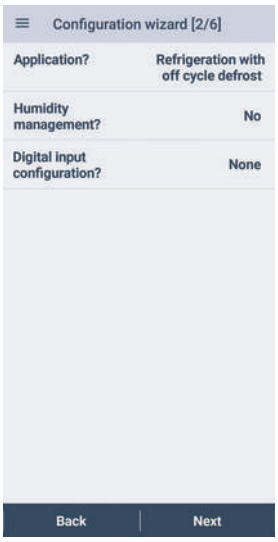


Fig. 5.c

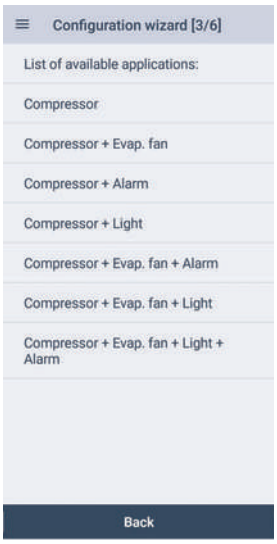


Fig. 5.d

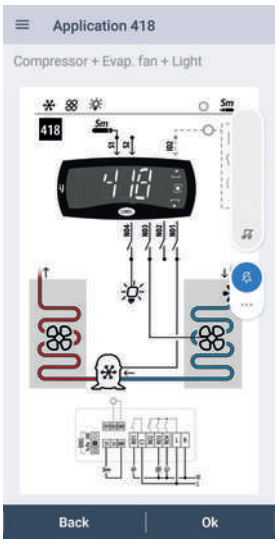


Fig. 5.e




Fig. 5.f

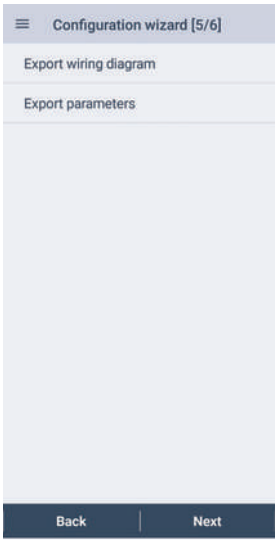


Fig. 5.g

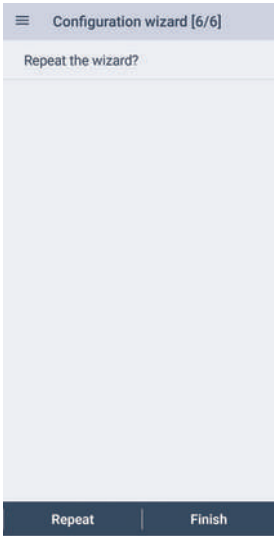


Fig. 5.h

Procedure:

12. open Applica on the smartphone;
13. access the controller via NFC or Bluetooth™, entering the profile credentials;
14. move the smartphone closer to the iJW controller to be configured (NFC connection only);
15. follow the guided procedure: on screen 1/6, selecting "No" skips the wizard, selecting "Only I/O" configures the parameters relating to the controller inputs and outputs and some main parameters, while selecting "Yes" goes to the next screen 2/6 where, by simply answering a few questions, a list of configurations embedded on the controller is selected and displayed on the next screen, 3/6. After having selected the desired configuration from those available, the app shows the connection diagram and the user can then confirm the configuration or return to the list; if the configuration is confirmed, screen 4/6 is shown, where the main parameters can be set. Once having set the parameters, go to screen 5/6 to save and share the connection diagram and the parameter list. Finally, on screen 6/6 the user can choose whether to repeat the wizard, cancelling the settings made, or to terminate the wizard and save the configuration and the parameters set on the controller.
16. move the smartphone closer to the iJW controller to write the configuration and the parameter settings (NFC connection only).

# 6. INITIAL CONFIGURATION

Once the electrical connections have been completed (see "Installation") and the power supply has been connected, the operations required for commissioning the controller depend on the type of interface used, however essentially involve setting the initial configuration parameters and where necessary the date/time and the time bands. The parameter configuration procedure can be run on the user terminal, a mobile device (with the Applica app), or the Applica Desktop configuration software. The parameters used for commissioning are shown in the Parameter table.

**Caution**:
- the parameters that can be set on the user terminal and in the Applica app may vary according to the rights assigned to the access profile, defined by the manufacturer. Therefore, not all of the following parameters may be visible or modifiable.
- Some operations can only be performed using Applica or the Applica Desktop configuration software, for example, configuring the display during defrost or setting the date/time and time bands.

### Initial configuration parameters

| Par. | Menu | Desc. | Def. | Min | Max | UOM | User |
|---|---|---|---|---|---|---|---|
| St | Ctl | Temperature control set point | 50 | r1 | r2 | °C/°F | U |
| /5 | Pro | Unit of measure: 0 = °C; 1 = °F | 0 | 0 | 1 | - | U |
| /6 | Pro | Display decimal point (main screen only): 0 = visible; 1 = not visible | 0 | 0 | 1 | - | S |
| /t1 | Pro | Display on user terminal:<br>0 = Not configured; 4 = value of S4; 10 = virtual probe<br>1 = value of S1; 5 = value of S5; 11 to 14 = not available<br>2 = value of S2; 6 to 8 = not available; 15 = actual control set point<br>3 = value of S3; 9 = control probe | 10 | 0 | 16 | - | S |
| d6 | - | Display during defrost: 0 = temperature alternating with dEF; 1 = freeze display; 2 = dEF | 1 | 0 | 2 | - | S |
| dI | dEF | Maximum interval between defrosts | 8 | 0 | 240 | h | S |
| dP1 | dEF | Maximum defrost duration | 45 | 1 | 240 | min | S |
| AH | ALM | Relative high temperature alarm threshold | 0 | 0 | 555/999 | Δ °C/°F | S |
| AL | ALM | Relative low temperature alarm threshold | 0 | 0 | 200/360 | Δ °C/°F | S |
| Hb | CnF | Enable buzzer: 0 = disabled; 1 = enabled | 1 | 0 | 1 | - | U |
| /P1 | Pro | Configuration of probes S1, S2, S3, S4, B5 0 = PT1000; 1 = PTC; 2 = NTC; 3 = NTC-LT; 4 = NTC-HT | 2 | 0 | 4 | - | S |
| /P2 | Pro | Configuration of multifunction input S3/ DI1: 0, 1, 2, 3, 4 = S3; 5 = DI1. | 5 | 0 | 5 | - | S |

(*): U = User; S = Service.

## 6.1 Description of the initial configuration parameters

### St: temperature control set point

Parameter St is used to set the temperature control set point.

| Par. | Menu | Desc. | Def. | Min | Max | UOM | User |
|---|---|---|---|---|---|---|---|
| St | Ctl | Temperature control set point | 50/122 | r1 | r2 | °C/°F | U |

### rd: temperature control differential

Parameter rd is used to set the temperature control differential (see "Control").

| Par. | Menu | Desc. | Def. | Min | Max | UOM | User |
|---|---|---|---|---|---|---|---|
| rd | Ctl | Temperature control differential | 2.0/3.6 | 0.1/0.2 | 99.9/179.2 | Δ °C/°F | S |

### /5, /6, /t1: display on user terminal

Parameters /5, /6 and /t1 are used to set the display shown on the user terminal. Parameter /5 sets the unit of measure °C or °F, parameter /6 sets whether or not the decimal digit is displayed and parameter /t1 sets the value displayed, either the control probe or virtual probe reading, or one of the set points. By default, the virtual control probe value is displayed, expressed in °C with one decimal.

| Par. | Menu | Desc. | Def. | Min | Max | UOM | User |
|---|---|---|---|---|---|---|---|
| /5 | Pro | Unit of measure: 0 = °C; 1 = °F | 0 | 0 | 1 | - | U |
| /6 | Pro | Display decimal point (main screen only): 0 = visible; 1 = not visible | 0 | 0 | 1 | - | S |
| /t1 | Pro | Display on user terminal:<br>0 = Not configured; 4 = value of S4; 10 = virtual probe<br>1 = value of S1; 5 = value of S5; 11 to 14 = not available<br>2 = value of S2; 6 to 8 = not available; 15 = actual control set point<br>3 = value of S3; 9 = control probe | 9 | 0 | 15 | - | S |

### d6: display on user terminal during defrost

Parameter d6 is used to set the display shown on the user terminal when defrosting, chosen between the value selected by parameter /t1 alternating with the message 'dEF', the last value shown before defrosting, or 'dEF' alone on steady. If d6 =1, the normal display resumes when the control temperature reaches the set point, the temperature displayed is lower than the value locked on the display or, in any case, after the time set for "bypass alarm after defrosting" (d8). By default, the value displayed before defrosting is shown (d6=1).

| Par. | Menu | Desc. | Def. | Min | Max | UOM | User |
|---|---|---|---|---|---|---|---|
| d6 | - | Display during defrost: 0 = temperature alternating with dEF; 1 = display locked; 2 = dEF | 1 | 0 | 2 | - | S |

### dI, dP1: defrost parameters

Parameter dI is used to set the maximum possible interval between defrosts, while parameter dP1 is used to set the maximum defrost duration. See "Functions" for more details.

| Par. | Menu | Desc. | Def. | Min | Max | UOM | User |
|---|---|---|---|---|---|---|---|
| dI | dEF | Maximum interval between defrosts | 8 | 0 | 240 | h | S |
| dP1 | dEF | Maximum defrost duration | 45 | 1 | 240 | min | S |

### Hb: enable buzzer

Parameter Hb is used to enable or disable the buzzer built into the controller; the buzzer is enabled by default.

| Par. | Menu | Desc. | Def. | Min | Max | UOM | User |
|---|---|---|---|---|---|---|---|
| Hb | CnF | Enable buzzer: 0 = disabled; 1 = enabled | 1 | 0 | 1 | - | U |

### /P1, /P2: probe types

Probes S1, S2, S3 can be configured as NTC, PTC, PT1000, NTC_HT or NTC_LT. Parameter /P1 is used to set the type of temperature probe. Parameter /P2 is used to choose whether the multifunction input S3/DI1 is configured as a temperature probe (and in this case it will be same type set by parameter /P1) or as a digital input. Parameters /P1 and/P2 can only be set using Applica or the Applica Desktop configuration software.

**Notice**: the temperature probes must all be the same type.

| Par. | Menu | Desc. | Def. | Min | Max | UOM | User |
|---|---|---|---|---|---|---|---|
| /P1 | Pro | Configuration of probes S1, S2, S3, S4, B5 0 = PT1000; 1 = PTC; 2 = NTC; 3 = NTC-LT; 4 = NTC-HT | 2 | 0 | 4 | - | S |
| /P2 | Pro | Configuration of multifunction input S3/DI1: 0, 1, 2, 3, 4 = S3; 5 = DI1. | 5 | 0 | 5 | - | S |

### AH/AL: relative high and low temperature alarm thresholds

Parameters AH and AL are used to set the thresholds relative to the set point for the high and low temperature alarms. For details on the high and low temperature alarms, see "Alarms".

| Par. | Menu | Desc. | Def. | Min | Max | UOM | User |
|---|---|---|---|---|---|---|---|
| AH | ALM | Relative high temperature alarm threshold | 0 | 0 | 555/999 | Δ °C/°F | S |
| AL | ALM | Relative low temperature alarm threshold | 0 | 0 | 200/360 | Δ °C/°F | S |

## 6.2 Set date/time and time bands

The smartphone's date and time can be used to set the controller's date/time, via the drop-down menu on the side in Applica, selecting "settings-->device-->set date/time".

Procedure for setting the time bands:

17. open Applica on the smartphone;
18. access the controller via NFC or Bluetooth™, entering your profile credentials;
19. open the "Scheduler" section;
20. define the time bands for the different days of the week;
21. apply the set schedule to the controller (upload button at the top-right for connection via NFC).

**Notice**:

- 8 daily time bands can be configured by setting parameters tS1, tE1 to tS8, tE8.
- always check the correct date and time setting for using the logs and other functions that refer to the RTC.

The correct date and time setting is required for some of the iJW controller's functions to work correctly:

- activation of the light or auxiliary output (par. H8) according to the set time bands;
- scheduled defrosts;
- counting operating hours and activation of the maintenance alarm when a set threshold is exceeded;
- periodic and event logging.

**Notice**: parameter dI can be used to set cyclical defrosts every "dI" hours, even if the RTC clock is not fitted.

**Caution**: changing the time set on the iJW controller by more than 140 minutes will clear the stored logs.

## 6.3 Checks after configuration

Once having completed the installation, configuration and programming operations, after commissioning the controller check that:

- the programming logic is suitable to control the unit and the system in question;
- the time has been set on the controller;
- the time bands have been set correctly;
- the standard display has been set on the user terminal;
- the appropriate unit of measure has been set for the temperature probes (°C or °F);

**Caution**: at the end of the commissioning procedure, the alarm log can be reset via the Applica app. See "Alarms".

## 6.4 Device security against undesired changes

### 6.4.1 Changing the login password

The parameters available on the user terminal may vary depending on the access profile. The user parameters ("U") are visible without a password, if set to the default value 00, and represent a basic set of modifiable parameters; the service parameters ("S") on the other hand can be accessed on entering the service password, set by default to 22, from the user terminal.
In order to avoid undesired changes to the parameters by third parties, the user and service passwords should be changed. This change can be made by accessing the parameter list directly from APPLICA mobile or desktop.
Specifically:

- Parameter PDS changes the service password (S) and can be set in the range from 0 to 999
- Parameter PDU changes the user password (U) and can be set in the range from 0 to 999

If the user password is changed from the default value 0, when the PSd password prompt is shown, the login profile needs to be selected, specifically:

- "USr" to log in with the user profile by entering the password set for PDU
- "Sru" to log in with the service profile by entering the password set for PDS

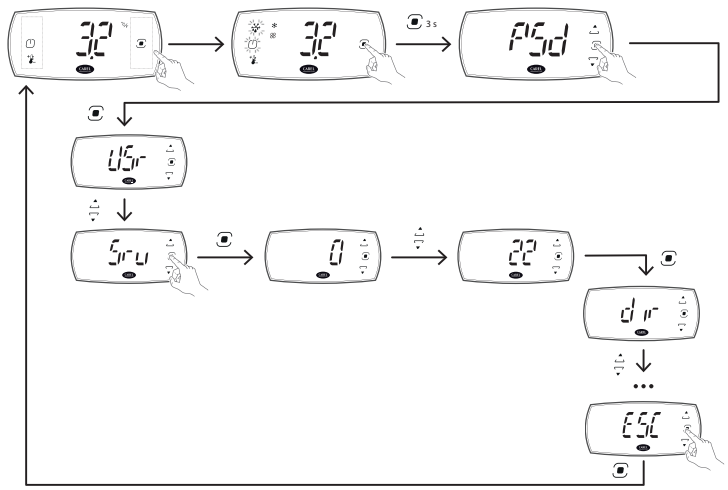


Fig. 6.i

A factory reset via parameter "rSC" resets the service and user passwords to the default values.

**Caution**: if the service password is changed from the default value 22 and the new password is then forgotten, follow the procedure described in "Resetting the service password to the default value".

To access the device via the APPLICA mobile or desktop app, the service password needs to be entered. Changing the value of parameter PDS changes the password to be entered when connecting to the device via these apps.

To access the device via the CONTROLLA mobile app, the user password needs to be entered. Changing the value of parameter PDU changes the password to be entered when connecting to the device via this app.

### 6.4.2 Restrictions on access for setting the parameters

**In order to avoid undesired changes to the parameters by third parties, it is strongly recommended to restrict access to the parameters after the device has been commissioned. This recommendation applies particularly to the NFC and Bluetooth connections. In fact, these do not need to be near the device for an extended time and thus can expose it to malicious attacks.**

Parameter /nE can be used enable or disable navigation via the user terminal; in particular, the following values can be set:
0 = navigation via user terminal enabled (default value)
1 = navigation via user terminal disabled;
2 = ON/OFF button disabled
3 = ON/OFF and set point modification buttons disabled

Due to its operating characteristics, the NFC memory is always active; parameter nFE can be set to ensure that any NFC memory writes are ignored by the controller; in particular, the following values can be set:
0 = copy parameters via NFC disabled
1 = copy parameters via NFC enabled (default value)
Parameter BtE can be used to disable Bluetooth™ communication, if available as a hardware option; in particular, the following values can be set:
0 = Bluetooth™ communication disabled
1 = Bluetooth™ communication enabled (default value)

### 6.4.3 Brute force password attack prevention algorithm

A brute force attack is a method of gaining access to password-protected device parameters, and involves trying every possible password combination until a match is found. Specifically, the service and user passwords can be set in the range from 0 to 999, and it is therefore possible to identify the set value with a finite number of attempts.
For this purpose, an algorithm has been introduced to prevent brute force attacks in the event where numerous attempts are made to guess the password on the user interface.

The algorithm allows three incorrect password attempts; on the fourth attempt, it adds a 30 second delay before being able to enter the password again. After this delay, the password can be entered.
If the correct password is entered, the parameters menu can be accessed, otherwise the delay is doubled, until reaching a maximum of 24 hours.
When the password entered is incorrect, the "Service" icon is briefly displayed and the buzzer sounds.
During the time when the algorithm prevents the password from being entered, the "Service" icon flashes and a flashing countdown indicates the time remaining until a new attempt to enter the password.

**Notice**: the brute force attack prevention algorithm is active only if the user password has been changed from the default value.



Display incorrect user password entry



Example of 20 second countdown display



Example of 1 minute countdown display

### 6.4.4 Resetting the service password to the default value

When the device is powered on, pressing PROG resets the service password to the default value.
Once this operation has been completed, access is available via APPLICA mobile and desktop or the display, using the default service password. This operation does not reset any other parameters to their factory default values.
To set the service password to the factory value (22):

- power down the controller;
- Power on the controller again and, when the software revision is shown on the display (example r1.4) press and hold PRG for 3 seconds
- when "PSr" is displayed, press PRG again within 3s
- when 22 is displayed, the procedure has been completed and the password has been reset to the default value.

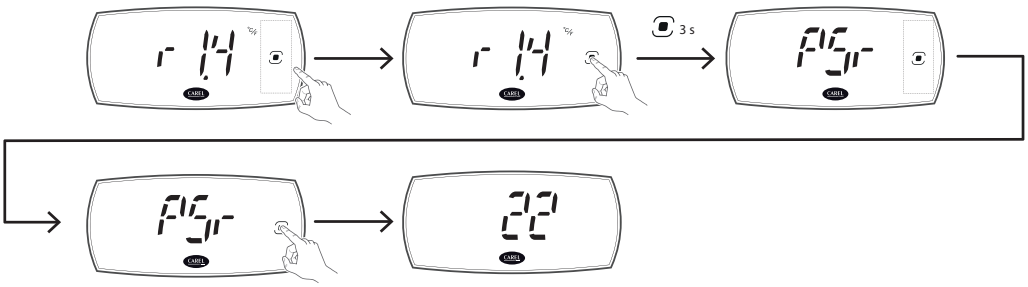


Fig. 6.j

## 6.5 Upgrading the device software

When the software is upgraded, certain parameters may be reset to their default values. The following procedure describes how to perform a firmware upgrade while maintaining the configuration set on the device.

The software can be upgraded using the following tools:

- Applica app on a mobile device (smartphone or tablet) via Bluetooth connection;
- Applica desktop using a personal computer via RS485 connection.

To connect the device to the configuration tools, see "Configuration tools"

### 6.5.1 Upgrading the device via APPLICA

To complete the upgrade correctly, proceed as follows:
1. connect to the device using the default password 22 or, if changed, the value set for parameter PDS;
2. save the configuration to the mobile device;
3. export the configuration:
   - select "share" in the left menu;
   - save the configuration to a folder on the mobile device;
4. update the device by selecting the .pack file previously downloaded or indicated by the firmware update procedure;
5. import the previously saved configuration;
6. apply the configuration.

Steps 3 and 5 can be skipped if using the APPLICA app version 1.11.2376 or higher; starting from this version, the configurations are also visible between different device firmware versions.

### 6.5.2 Upgrading the device using APPLICA desktop

To complete the upgrade correctly, proceed as follows:
1. connect to the device using the default password 22 or, if changed, the value set for parameter PDS;
2. save the existing configuration:
   - select the "Configurations" menu;
   - select the "New" > "New configuration" button to create a new configuration and assign it a name;
   - select the "Edit" > "Applica live values" button to load the parameter values currently present on the device;
   - select the "File" > "Export" button to save the configuration to a folder on your personal computer;
3. select the "Target" menu and upgrade the device via the "Download" button and selecting the previously downloaded .pack file;
4. import the previously saved configuration by selecting "File" > "Import";
5. apply the configuration by selecting "Applica" > "Applica configuration".

For further details on creating configurations, see the "Configurations" section.

# 7. FUNCTIONS

The following paragraphs describe how to implement a detailed parameter configuration. The parameters described below can be configured via the Applica Desktop configuration software or the Applica app.

**Caution**: the information available in Applica may vary according to the password set and the configuration defined by the unit manufacturer, and consequently not all of the parameters shown may be visible or modifiable.
For details on the parameters and the related access levels, see the "Parameter table".

## 7.1 ON/OFF

The unit can be switched on or off in different ways: user interface (button or parameter), supervisor and digital input.
Parameter On is used to switch the controller ON/OFF. If there is a digital input configured as remote ON/OFF, this has higher priority than the supervisor command or the On parameter.

| Code | Desc. | Def. | Min | Max | UOM | User | User terminal |
|---|---|---|---|---|---|---|---|
| DIF | Assign remote ON/OFF digital input - see DIA | ... | 0 | 4 | - | S | NO |
| On | ON/OFF command 0= OFF; 1 = ON. | 1 | 0 | 1 | - | U | YES |

In this operating mode, the display shows the standard display set by parameter /t1, alternating with the message "OFF".

Functions enabled/disabled in OFF status

| Function | Enabled | Disabled |
|---|---|---|
| Compressor control (off and pump down valve closed) | | ● |
| Dead band control | | ● |
| Auxiliary compressor control with and without rotation | | ● |
| Defrost | | ● |
| Evaporator fan control | | ● |
| Humidity control | | ● |
| Continuous cycle | | ● |
| Condensing fan control (if enabled) | | ● |
| Logs | ● | |
| Low temperature alarm LO | | ● |
| High temperature alarm HI | | ● |
| Immediate alarm from external contact IA | | ● |
| Delayed alarm from external contact dA | | ● |
| Defrost ended due to timeout alarm Ed1, Ed2 | | ● |
| Pump down ended after maximum time alarm Pd | | ● |
| Low pressure alarm from external contact LP | | ● |
| Autostart in pump down alarm AtS | | ● |
| High condenser temperature warning and alarm cht, CHt | ● | |
| Open door alarm dor | | ● |
| Frost protection alarm AFr | | ● |
| Type HA and HF HACCP alarm | ● | |
| Buzzer (off) and alarm relay (non-alarm status) | | ● |
| HACCP control | | ● |
| Defrost according to scheduled time bands | | ● |
| Timed defrost (timer "dI" updated) | | ● |
| Defrost from digital input (if enabled) | | ● |
| Defrost from keypad and supervisor | | ● |
| High and low power supply voltage alarm EHI and ELO | | ● |
| Generic alarm with high threshold GHI and GLO | | ● |
| Refrigerant leak alarm rSF | ● | |
| Maintenance request SrC | | ● |
| Parameter setting and display | ● | |
| Auxiliary relay on/off | ● | |
| Autostart compressor in pump down (if enabled) | ● | |
| Door switch limited to light management | ● | |
| Control probe error alarm rE | ● | |
| Probe error alarm E1, E2, E3, E4 | ● | |
| Clock not updated (if featured) alarm Etc | ● | |
| Configuration not terminated correctly alarm SF | ● | |
| Configuration write error CE | ● | |
| Light or aux on/off based on scheduled time bands | | ● |
| Set point changed based on scheduled time bands | ● | |

Tab. 7.a

**Notice**: in Off status, the defrost interval dI is always updated, in order to maintain the cyclical nature of this interval. If a defrost interval expires when the unit is off, the event is recorded and, when the unit is switched on, a defrost request is generated.

The transition from On to Off occurs as follows:
- the compressor protection times are observed;
- pump down is performed (if enabled);
- defrosting is forcibly terminated and will not resume when switching On;
- the continuous cycle is forcibly terminated and will not be resumed when switching On.

The transition from Off to On occurs as follows:
- the compressor protection times are observed;
- defrosting is not performed at start-up (if enabled), this in fact refers to power-on;
- the compressor and fan delay at start-up c0 is not set, and refers to power-on.

## 7.2 Inputs and outputs

The iJW controller has a maximum of 3 analogue inputs, 2 digital inputs and 1 multifunction input. In addition, on some models, an additional analogue input is available for connecting a humidity probe. iJW has a maximum of 6 digital outputs. See "Description of the terminals". NTC, PT1000, PTC, NTC HT or NTC LT temperature probes can be connected to the analogue inputs; all probes must be the same type. See the parameter table.

Analogue inputs

| Size | Code | Probes | | | | | |
|---|---|---|---|---|---|---|---|
| | | Passive | | | | | Active |
| | | NTC (–50T90 °C) | Pt1000 (–60T120 °C) | PTC (–50T150 °C) | NTC HT (–40T150 °C) | NTC LT (–80T105 °C) | 0 to 5 V ratiometric |
| SMALL | IJWPSA**01***** | YES | YES | YES | YES | YES | NO |
| | IJWPSA**02***** | YES | YES | YES | YES | YES | NO |
| | IJWPSA**07***** | YES | YES | YES | YES | YES | YES |
| LARGE | IJWPLA**01***** | YES | YES | YES | YES | YES | NO |
| | IJWPLA**02***** | YES | YES | YES | YES | YES | NO |
| | IJWPLA**07***** | YES | YES | YES | YES | YES | YES |

Tab. 7.b

## 7.2.1 Probes (analogue inputs)

| | Small | | | | Large | | | | |
|---|---|---|---|---|---|---|---|---|---|
| Analogue input | S1 | S2 | S3 | | S1 | S2 | S3 | | S4 |
| Parameter for type of probe | /P1 | | /P1 | /P2 | /P1 | | /P1 | /P2 | /P1 |
| 0 : PT1000 | ● | ● | ● | | ● | ● | ● | | ● |
| 1 : PTC | ● | ● | ● | | ● | ● | ● | | ● |
| 2 : NTC | ● | ● | ● | | ● | ● | ● | | ● |
| 3 : NTC-LT | ● | ● | ● | | ● | ● | ● | | ● |
| 4 : NTC-HT | ● | ● | ● | | ● | ● | ● | | ● |
| 5 : Digital input | | | | ● | | | | ● | |

Tab. 7.c

The 0-5 V ratiometric humidity probe, available on some models, does not need to be configured.

**Caution**: for the maximum current that can be supplied to the ratiometric probes, see the Technical specifications table.

To assign the function to each physical probe, configure parameters /FA, /Fb, ... /FR. See the parameter table.

| Probe | Par. |
|---|---|
| Outlet (Sm) | /FA |
| Defrost (Sd) | /Fb |
| Intake (Sr) | /Fc |
| Defrost probe 2 (Sd2) | /FF |

| Probe | Par. |
|---|---|
| Auxiliary temperature 1 (Saux 1) | /FG |
| Auxiliary temperature 2 (Saux 2) | /FH |
| Ambient temperature | /FI |
| Glass temperature | /FM |

| Probe | Par. |
|---|---|
| Condensing temperature | /Fo |
| Ambient humidity | /Fp |
| Frost protection temperature | /Fq |
| Product temperature | /FR |

Tab. 7.d

### Example of probe configuration.

To associate a function with a physical probe, set the value of the corresponding parameter /Fx to the value corresponding to the probe, as shown in the following table. For example, to assign the outlet temperature to probe S1, set parameter /FA to 1.

| Code | Desc. | | | Def. | Min | Max | UOM | User | User terminal |
|---|---|---|---|---|---|---|---|---|---|
| /FA | Assign outlet temperature probe (Sm) | | | ... | 0 | 7 | - | S | No |
| | 0 = Function disabled | 3 = Probe S3 | 6 = Not available | | | | | | |
| | 1 = Probe S1 | 4 = Probe S4 | 7 = Not available | | | | | | |
| | 2 = Probe S2 | 5 = Reserved | | | | | | | |

The assignment of the controller's default probes depends on the settings made in the wizard.
In all configurations already embedded on the controller:

- S1 = Air off probe (Sm);
  with the default settings, this probe corresponds to the virtual control probe Sv.

The default configuration also sets these three probes as NTC. However, other types of probes can be connected by setting parameter /P1.

**Notice**:

- the configuration /FA = 0 and /Fc = 0 will cause the 'rE' alarm (control probe alarm), as it means that no control probe is associated.
- For a description of the probe functions, see the following paragraphs.

### Calibration (parameters /cA to /cr)

iJW offers the possibility to calibrate values read by the probes associated with the various functions set by parameters /FA to /FR. In particular, parameters /cA to /cy are used to increase or decrease the values read by the probes connected to the analogue inputs, consistently with the unit of measure.

**Caution HACCP:** this modification may not be allowed by HACCP procedures as it alters the measured value. Verify that you have authorisation and record the changes where required.

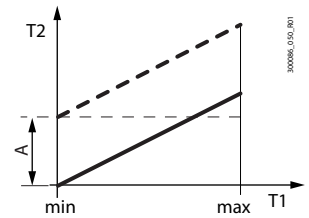


Fig. 7.a

Description

| | |
|---|---|
| T1 | Temperature read by the probe |
| T2 | Calibrated temperature |
| A | Calibration offset |
| min, max | Field of measurement |

### /2: Analogue probe measurement stability and refresh display

| Code | Desc. | Def. | Min | Max | UOM | User | User terminal |
|---|---|---|---|---|---|---|---|
| /2 | Analogue probe measurement stability:<br>0 = probe reading not delayed;<br>…<br>9 = maximum probe reading delay | 5 | 0 | 9 | - | S | No |
| /3 | Display probe value:<br>0 = disabled;<br>1 = fast update;<br>...<br>15 = slow update. | 0 | 1 | 15 | - | S | No |

Parameter /2 defines the coefficient used to stabilise the temperature measurement. Low values assigned to this parameter allow a prompt response of the sensor to temperature variations; the reading however become more sensitive to disturbance. High values slow down the response, but guarantee greater immunity to disturbance, that is, a more stable, precise and filtered reading.

Parameter /3 is used to refresh the probe readings displayed; low values of /3 mean the display is refreshed quickly, high values mean it is refreshed slowly.

| /3 | Display delay | /3 | Display delay | /3 | Display delay | /3 | Display delay |
|---|---|---|---|---|---|---|---|
| 0 | Disabled | 4 | 20 s | 8 | 50 s | 12 | 105 s |
| 1 | 5 s | 5 | 25 s | 9 | 60 s | 13 | 120 s |
| 2 | 10 s | 6 | 30 s | 10 | 75 s | 14 | 150 s |
| 3 | 15 s | 7 | 40 s | 11 | 90 s | 15 | 180 s |

**Note**: parameter /3 only affects the display of the probe readings and not the value used for control.

## 7.3 Digital inputs

iJW manages up to 2 physical digital inputs and 1 multifunction input. See "Installation".
To associate an input to each available function, set parameters DIA, DIb, … DIr to the value relating to the physical or virtual digital input. See the parameter table.

### Digital input functions

| Digital input assignment for: | Par. | Contact (*) | |
|---|---|---|---|
| | | Open | Closed |
| immediate external alarm | DIA | Alarm active | Alarm not active |
| delayed external alarm | DIb | Alarm active | Alarm not active |
| enable defrost | DIc | Defrost not enabled | Defrost enabled |
| start defrost | DId | No effect | Start defrost |
| door switch with stopping control | DIE | Door open | Door closed |
| remote ON/OFF | DIF | OFF | ON |
| curtain switch/light | DIG | Day status | Night status (ECO mode) |
| start/stop continuous cycle | DIH | Stop continuous cycle | Start continuous cycle |
| door switch without stopping control | DIP | Door open | Door closed |
| generic alarm function | DIS | Alarm active | Alarm not active |
| low pressure switch | DIt | Alarm active | Alarm not active |
| auxiliary input | DIU | Auxiliary input deactivated | Auxiliary input activated |

Tab. 7.e

(*) Default configuration with parameters rIA, rIb, ..., rIU = 0; by setting the corresponding parameters rIA, rIb, ..., rIU = 1, the contact logic is reversed and therefore the meanings of open/closed are also reversed.

### Example of digital input configuration.

To associate a function with a digital input, set the value of the corresponding parameter to the value corresponding to the input, as shown in the following table. For example, to assign the immediate external alarm to input DI1, set parameter DIA to 1.

| Code | Desc. | Def. | Min | Max | UOM | User | User terminal |
|---|---|---|---|---|---|---|---|
| DIA | Assign immediate external alarm digital input:<br>0 = Disabled; 1 = DI1; 2 = DI2; 3, 4 = Not available | ... | 0 | 4 | - | S | No |

The assignment of the controller's default inputs depends on the settings made in the wizard.

If the opposite logic to the default setting is required, or to correct a wiring error, the logic of the functions associated with the digital inputs using parameters rIA, rIb, ... rIU can be reversed.

| Code | Desc. | Def. | Min | Max | UOM | User | User terminal |
|---|---|---|---|---|---|---|---|
| rIA, rIb, ...,rIU | Reverse digital input logic | 0 | - | 0 | 1 | S | No |

### Immediate external alarm (par. DIA)

Activation of the alarm causes:
- message 'IA' shown on the display and the "Service" icon flashing;
- activation of the buzzer (see par. Hb);
- activation of the alarm relay (see par. DOb);
- deactivation of the compressor output (see par. DOA).

**Notice**: activation of the external alarm shuts down the evaporator fan only if this follows the status of the compressor output, as set for parameter /F2. The compressor is shut down immediately due to an external alarm, and consequently the compressor ON time is ignored (parameter c3).

| Code | Desc. | Def. | Min | Max | UOM | User | User terminal |
|---|---|---|---|---|---|---|---|
| DIA | Assign immediate external alarm digital input:<br>0 = Disabled; 1 = DI1; 2 = DI2; 3, 4 = Not available | ... | 0 | 4 | - | S | No |

### Delayed external alarm (par. DIb)

The behaviour of this alarm is the same as for the immediate external alarm, with a delay in activation set by parameter A7. If set to 0, the alarm is signal-only and the compressor is not stopped.

| Code | Desc. | Def. | Min | Max | UOM | User | User terminal |
|---|---|---|---|---|---|---|---|
| DIb | Assign delayed external alarm digital input - see DIA | ... | 0 | 4 | - | S | No |

### Enable defrost (par. DIc)

Used to disable any defrost calls. When the contact is open, all defrost calls are ignored. Par. d5 can be used to delay activation.

Notice:

- if the contact is open while a defrost is in progress, this is immediately stopped, the defrost icon flashes on the display indicating the defrost call is active (this starts again when the contact closes);
- this function may be useful to prevent defrosts on units exposed to the public during store opening hours.

| Code | Desc. | Def. | Min | Max | UOM | User | User terminal |
|---|---|---|---|---|---|---|---|
| DIc | Assign enable defrost digital input - see DIA | ... | 0 | 4 | - | S | No |
| dS | Defrost delay at start-up or after command from digital input | 0 | 0 | 240 | min | S | No |

### Start defrost (par. DId)

Closing the digital contact starts a defrost, if enabled.

Notice: if the defrost is disabled by another digital input configured as "enable defrost", the defrost calls are ignored.

| Code | Desc. | Def. | Min | Max | UOM | User | User terminal |
|---|---|---|---|---|---|---|---|
| DId | Assign start defrost digital input - see DIA | ... | 0 | 4 | - | S | No |
| d5 | Defrost delay at start-up or after command from digital input | 0 | 0 | 240 | min | S | No |

### Door switch with compressor stop (par. DIE)

Door open:

- stop compressor and evaporator fan; alternatively, the compressor can stay on by setting parameter DIP (see the description below);
- light on (see par. DOE);
- Service/Maintenance icon flashing;
- disable temperature alarms.

Door closed:

- resume control;
- light off (see par. DOE) with delay set by par. H14;
- ALARM stops flashing;
- enable temperature alarms with delay Ad after bypass time defined by par. Add.

| Code | Desc. | Def. | Min | Max | UOM | User | User terminal |
|---|---|---|---|---|---|---|---|
| DIE | Assign digital input for door switch with solenoid/compressor and evaporator fans OFF - see DIA | ... | 0 | 4 | - | S | No |
| DOE | Assign light digital output - see DOA | ... | 0 | 6 | - | S | No |
| H14 | Time light stays on after closing the door | 0 | 0 | 240 | min | U | No |
| Add | Open door alarm delay and high temperature alarm bypass time for open door | 30 | 1 | 240 | min | U | No |

Caution: check compatibility of disabling/delaying the alarm with the site's HACCP procedures.

Notice:

- when control resumes, the compressor times are observed (see the paragraph "Compressor");
- if the door remains open for longer than the value of par. Add, control resumes in any case. The light remains on, the measurement shown on the display flashes, the buzzer and the alarm relay (if enabled) are activated, and the temperature alarms are enabled with delay Ad. The display also shows the open door alarm (dor).

### Door switch without compressor stop (par. DIP)

Operating mode that allows the door to be opened without stopping the compressor. In this case, when opening the door, the evaporator fan will stop. This operating mode can be configured by setting parameter DIP with one of the digital inputs. Opening the door introduces a temperature alarm delay as described for the door switch function (par. DIE).

| Code | Desc. | Def. | Min | Max | UOM | User | User terminal |
|---|---|---|---|---|---|---|---|
| DIP | Assign door switch without control stop digital input - see DIA | ... | 0 | 4 | - | S | No |

### Remote ON/OFF (par. DIF)

When the controller is OFF:

- the user terminal shows the value measured by the set probe (parameter /t1) alternating with the message OFF;
- the auxiliary relays set as AUX and light remain active, while the other auxiliary outputs are deactivated;
- the buzzer and alarm relay are deactivated;
- the following are not performed: control, defrosts, continuous cycle, temperature alarm signals;
- in the transition from ON to OFF the compressor protection times are observed.

When the controller is ON again, the compressor times are observed and all of the functions are reactivated, except for the defrost on start-up and compressor and evaporator fan delay at power on (par. c0).

Notice:
- the OFF command from digital input has priority over those from the keypad or supervisor;
- if the controller remains OFF for a longer time than the value set for parameter dI, a defrost is performed when the controller is switched on again.

| Code | Desc. | Def. | Min | Max | UOM | User | User terminal |
|---|---|---|---|---|---|---|---|
| DIF | Assign remote ON/OFF digital input - see DIA | ... | 0 | 4 | - | S | NO |
| dI | Maximum interval between consecutive defrosts | 8 | 0 | 240 | hours | S | YES |
| c0 | Delay to enable solenoid/compressor and evaporation fans at power-on | 0 | 0 | 240 | min | S | NO |

### Curtain switch (par. DIG)

Digital input used to manage a curtain and switch from day to night (ECO).
During night status (ECO mode):
- the night-time set point Stn is used for control, calculated based on the set point St plus the offset defined by parameter r4 (Stn = St + r4) and r4d is used as the control differential. The control probe can also be modified according to the setting of parameter r6a (0 = virtual probe, 1 = probe), see the paragraph "Control";
- the AUX or light output is deactivated according to the setting of parameter H8.

During day status:
- normal operation resumes: set point = St, virtual probe used as control probe;
- AUX or light output activated according to the setting of parameter H8.

| Code | Desc. | Def. | Min | Max | UOM | User | User terminal |
|---|---|---|---|---|---|---|---|
| DIG | Assign curtain switch digital input - see DIA | ... | 0 | 4 | - | S | No |
| H8 | Output switched with time bands 0 = Light 1 = AUX | 0 | 0 | 1 | - | S | No |
| r4 | Automatic night set point variation | 0 | -50/-90 | 50/90 | °C/°F | S | No |
| r4d | Temperature control differential in ECO mode | 4/7.2 | 0.1/0.2 | 99.9/ 179.2 | °C/°F | S | |
| r6a | Night control probe:<br>0 = virtual probe Sv;<br>1 = air on probe Sr. | 0 | 0 | 1 | - | S | No |

### Start/stop continuous cycle (par. DIH)

When the contact is closed, the continuous cycle is activated, based on parameters cc and ccE (see "Functions").
When the contact opens again, the continuous cycle is deactivated.

| Code | Desc. | Def. | Min | Max | UOM | User | User terminal |
|---|---|---|---|---|---|---|---|
| DIH | Assign start/stop continuous cycle digital input - see DIA | ... | 0 | 4 | - | S | No |

### Generic alarm from digital input (par. DIS)

Activation of the alarm depends on parameter GFA_E. Activation of the alarm causes:
- message GHI shown on the display and service icon flashing;
- activation of the buzzer (see par. Hb);
- activation of the alarm relay (see par. DOb);

| Code | Desc. | Def. | Min | Max | UOM | User | User terminal |
|---|---|---|---|---|---|---|---|
| DIS | Assign digital input for generic alarm from digital input - see DIA | ... | 0 | 4 | - | S | No |
| GFA_E | Generic alarm function, enable 0 = always; 1 = unit ON; 2 = unit OFF;<br>3 = defrost; 4 = not used; 5 = continuous cycle; 6 = duty setting; 7 = standby;<br>8 = control; 9 = door open; 10 = active alarm. | 8 | 0 | 10 | - | S | No |

### Low pressure switch (par. Dlt)

If a low pressure switch is connected, the LP alarm is activated on opening. if pump down by pressure is enabled, the pressure switch is used to switch off the compressor and the autostart procedure.

| Code | Desc. | Def. | Min | Max | UOM | User | User terminal |
|---|---|---|---|---|---|---|---|
| Dlt | Assign low pressure switch digital input - see DIA | ... | 0 | 4 | - | S | No |

### Digital input for activating the output configured as AUX (par. DIU)

Digital input that can be used to activate/deactivate the output configured as AUX (parameter DOC).

| Code | Desc. | Def. | Min | Max | UOM | User | User terminal |
|---|---|---|---|---|---|---|---|
| DIU | Assign AUX output activation digital input - see DIA | ... | 0 | 4 | - | S | No |
| DOC | Assign AUX auxiliary digital output - see DOA | ... | 0 | 6 | - | S | No |

## 7.4 Digital outputs

iJW features up to 6 digital outputs - NO1 to NO6. To associate the digital outputs with the available functions, set parameters DOA, DOb, ... DOz to the value of the physical digital output. See the parameter table.

### Digital output functions

| Digital output assignment for: | Par. | Digital output assignment for: | Par. | Digital output assignment for: | Par. |
|---|---|---|---|---|---|
| Solenoid/compressor | DOA | Dehumidification heater | DOj | Humidifier | DOu |
| Alarm | DOb | Auxiliary compressor without rotation | DOk | Heading in dead band | DOv |
| Auxiliary output | DOC | Liquid valve | DOn | Auxiliary parallel compressor | DOw |
| Light | DOE | Condensate drain heater | DOP | Gasket heater | DOx |
| Defrost | DOG | Anti-sweat heater | DOQ | Auxiliary compressor with rotation | DOy |
| Auxiliary evaporator defrost | DOH | Generic digital output | DOS | External dehumidifier | DOz |
| Evaporator fans | DOI | Condenser fans | DOt | | |

Tab. 7.f

### Example of digital output configuration.

To associate a function with a digital output, set the value of the corresponding parameter DIx to the value corresponding to the output, as shown in the following table. For example, to assign the compressor output to relay NO1, set parameter DOA to 1.

| Code | Desc. | | Def. | Min | Max | UOM | User | User terminal |
|---|---|---|---|---|---|---|---|---|
| DOA | Assign solenoid/compressor digital output | | ... | 0 | 6 | - | S | NO |
| | 0 = not configured | 4 = digital output 4 (NO4) | | | | | | |
| | 1 = digital output 1 (NO1) | 5 = digital output 5 (NO5) | | | | | | |
| | 2 = digital output 2 (NO2) | 6 = digital output 6 (NO6) | | | | | | |
| | 3 = digital output 3 (NO3) | | | | | | | |

The assignment of the controller's default inputs depends on the settings made in the wizard.

If the opposite logic to the default setting is required, or to correct a wiring error, the logic of the functions associated with the digital outputs using parameters rOA, rOb, ... rOz can be reversed.

| Code | Description | Def | Min | Max | UOM | User | User terminal |
|---|---|---|---|---|---|---|---|
| rOA, rOb, ...,rOz | Digital output logic: 0=direct; 1=reverse | 0 | 0 | 1 | - | S | NO |

### Solenoid/compressor (par. DOA)

This is used to assign the compressor or liquid solenoid valve output.

| Par. | Description | | Def | Min | Max | UOM | User | User terminal |
|---|---|---|---|---|---|---|---|---|
| DOA | Assign solenoid/compressor digital output | | ... | 0 | 6 | - | S | NO |
| | 0 = not configured | 4 = digital output 4 (NO4) | | | | | | |
| | 1 = digital output 1 (NO1) | 5 = digital output 5 (NO5) | | | | | | |
| | 2 = digital output 2 (NO2) | 6 = digital output 6 (NO6) | | | | | | |
| | 3 = digital output 3 (NO3) | | | | | | | |

### Alarm (par. DOb)

This is used to assign the alarm output. The relay associated with the alarm function can work as follows:

- normally de-energised: the relay is energised when an alarm occurs (rOA = 0);
- normally energised: the relay is de-energised when an alarm occurs (rOA = 1);

**Notice**: operation with the relay normally energised (rOA = 1) when an alarm occurs ensures maximum safety when the alarm is due to a power failure or power cable disconnection.

| Par. | Description | Def | Min | Max | UOM | User | User terminal |
|---|---|---|---|---|---|---|---|
| DOb | Assign alarm digital output - see DOA | ... | 0 | 6 | - | S | NO |

### AUX auxiliary output (par. DOc)

The relay can be activated/deactivated from the supervisor and on changeover between day/night status (linked to the curtain switch or the time band settings). Activation/deactivation of the actuator is signalled by the icon switching on/off (if present). The AUX output to be activated or deactivated based on the night/day time band can be selected (see parameters tS1...8, tE1...8 and H8).

| Par. | Description | Def | Min | Max | UOM | User | User terminal |
|---|---|---|---|---|---|---|---|
| DOC | Assign AUX auxiliary digital output - see DOA | ... | 0 | 6 | - | S | NO |

### Light (par. DOE)

The relay can be activated/deactivated using the direct functions on the user terminal, from the supervisor and on changeover between day/night status (linked to the curtain switch or the time band settings). Activation/deactivation of the actuator is signalled by the light icon switching on/off (if present). The light output to be activated or deactivated based on the night/day time band can be selected (see parameters tS1...8, tE1...8 and H8).

| Par. | Description | Def | Min | Max | UOM | User | User terminal |
|---|---|---|---|---|---|---|---|
| DOE | Assign light digital output - see DOA | ... | 0 | 6 | - | S | NO |

### Defrost (par. DOG)

The relay is activated/deactivated based on the defrost settings (see "Defrost"). Activation/deactivation of the actuator is signalled by the defrost icon switching on/off on the user terminal (if present).

### Auxiliary evaporator defrost (par. DOH)

The relay is activated/deactivated based on the defrost settings (see "Defrost").

| Par. | Description | Def | Min | Max | UOM | User | User terminal |
|---|---|---|---|---|---|---|---|
| DOH | Assign auxiliary evaporator defrost digital output - see DOA | ... | 0 | 6 | - | S | NO |

### Evaporator fans (par. DOI)

The relay is activated/deactivated based on the evaporator fan settings (see "Evaporator fans"). Activation/deactivation of the relay is signalled by the evaporator fan icon switching on/off on the display (if present).

| Par. | Description | Def | Min | Max | UOM | User | User terminal |
|---|---|---|---|---|---|---|---|
| DOI | Assign evaporator fan digital output - see DOA | ... | 0 | 6 | - | S | NO |

### Dehumidification (par. DOj)

Select the digital output used to manage the dehumidification function. See "Control".

| Par. | Description | Def | Min | Max | UOM | User | User terminal |
|---|---|---|---|---|---|---|---|
| DOj | Assign dehumidification heater digital output - see DOA | ... | 0 | 6 | - | S | NO |

### Auxiliary compressor without rotation (par. DOk)

Select the output for the auxiliary compressor without rotation (see "Control"). Setting this output enables an auxiliary compressor that is activated as a second control step, without rotation, i.e. always switching on after the main compressor. In the event of simultaneous request for both steps, the auxiliary compressor is activated after a delay time set by parameter c11, to avoid simultaneous starts.

| Par. | Description | Def | Min | Max | UOM | User | User terminal |
|---|---|---|---|---|---|---|---|
| DOk | Assign auxiliary compressor without rotation digital output - see DOA | ... | 0 | 6 | - | S | NO |
| c11 | Second compressor start delay | 4 | 0 | 250 | s | S | NO |

### Pump down valve (par. DOn)

Digital output for pump down valve management.

| Par. | Description | Def | Min | Max | UOM | User | User terminal |
|---|---|---|---|---|---|---|---|
| DOn | Assign pump down valve digital output - see DOA | ... | 0 | 6 | - | S | NO |

### Condensate drain heater (par. DOP)

During defrosting there may be frozen condensate on the bottom of the cabinet that prevents the water thawed from the evaporator from being drained correctly. The digital output can be configured to manage the condensate drain heater function. The heater is switched on before defrosting (dHA) and remains on after the defrost ends, for the time dHE. The heater can be activated by selecting a digital output with par. DOP.

**Notice**: the heater must be protected against overheating (e.g. thermal protector).

| Par. | Description | Def | Min | Max | UOM | User | User terminal |
|---|---|---|---|---|---|---|---|
| DOP | Assign drain heater digital output - see DOA | ... | 0 | 6 | - | S | NO |
| dHA | Condensate drain heater activation time before defrosting | 3 | 1 | 120 | min | S | No |
| dHE | Condensate drain heater activation time after defrosting | 3 | 1 | 120 | min | S | No |

### Anti-sweat heater (par. DOQ)

Select the digital output for demisting the glass (see "Anti-sweat heater or fan").

| Par. | Description | Def | Min | Max | UOM | User | User terminal |
|---|---|---|---|---|---|---|---|
| DOQ | Assign anti-sweat heater digital output - see DOA | ... | 0 | 6 | - | S | NO |

### Generic function output (par. DOS)

Select the digital output for the generic function with ON/OFF output (see "Generic functions").

| Par. | Description | Def | Min | Max | UOM | User | User terminal |
|---|---|---|---|---|---|---|---|
| DOS | Assign generic function digital output- see DOA | ... | 0 | 6 | - | S | NO |

### Evaporator fans (par. DOt)

The relay is activated/deactivated based on the condenser fan settings (see "Condenser fans").

| Par. | Description | Def | Min | Max | UOM | User | User terminal |
|---|---|---|---|---|---|---|---|
| DOt | Assign condenser fan digital output - see DOA | ... | 0 | 6 | - | S | NO |

### Humidifier output (par. DOu)

Select the humidification output (see "Humidity management").

| Par. | Description | Def | Min | Max | UOM | User | User terminal |
|---|---|---|---|---|---|---|---|
| DOu | Assign humidification digital output - see DOA | ... | 0 | 6 | - | S | NO |

### Reverse dead band output (par. DOv)

Select reverse output for dead band control (see "Control").

| Par. | Description | Def | Min | Max | UOM | User | User terminal |
|---|---|---|---|---|---|---|---|
| DOv | Assign reverse digital output with dead band control - see DOA | ... | 0 | 6 | - | S | NO |

### Auxiliary parallel compressor (par. DOw)

Select the auxiliary parallel compressor output (see "Control"). Setting this output enables an auxiliary compressor that works in parallel with the main compressor. A delay time can be set using parameter c11 to avoid simultaneous starts.

| Par. | Description | Def | Min | Max | UOM | User | User terminal |
|---|---|---|---|---|---|---|---|
| DOw | Assign auxiliary parallel compressor digital output - see DOA | ... | 0 | 6 | - | S | NO |
| c11 | Second compressor start delay | 4 | 0 | 250 | s | S | NO |

### Gasket heater (par. DOx)

Select the digital output for the door gasket heater (see "Gasket heater").

| Par. | Description | Def | Min | Max | UOM | User | User terminal |
|---|---|---|---|---|---|---|---|
| DOx | Assign gasket heater digital output - see DOA | ... | 0 | 6 | - | S | NO |

### Auxiliary compressor with rotation (par. DOy)

Select the output for the auxiliary compressor with rotation (see "Control"). Setting this output enables an auxiliary compressor that is activated as a second control step, with rotation, i.e. alternating with the compressor that starts first so as to balance the operating hours of the two compressors. In the event of simultaneous request for both steps, the second compressor is activated after a delay time set by parameter c11, to avoid simultaneous starts.

| Par. | Description | Def | Min | Max | UOM | User | User terminal |
|---|---|---|---|---|---|---|---|
| DOy | Assign auxiliary compressor with rotation digital output - see DOA | ... | 0 | 6 | - | S | NO |
| c11 | Second compressor start delay | 4 | 0 | 250 | s | S | NO |

### External dehumidifier (par. DOz)

Select the digital output for activation of an external dehumidifier (see "Humidity management").

| Par. | Description | Def | Min | Max | UOM | User | User terminal |
|---|---|---|---|---|---|---|---|
| DOz | Assign external dehumidifier digital output - see DOA | ... | 0 | 6 | - | S | NO |

## 7.4.1 Test output mode

The iJW controller provides the possibility to test the operation of the outputs, either from the Applica Desktop configuration software or via the Applica app, by accessing Service area > Test mode.

| Par. | Description | Def | Min | Max | UOM | User | User terminal |
|---|---|---|---|---|---|---|---|
| Mr1 | Test mode, activate relay1: 0 = disabled; 1 = automatic; 2 = activated | 1 | 0 | 2 | - | S | NO |
| Mr2 | Test mode, activate relay 2 - see Mr1 | 1 | 0 | 2 | - | S | NO |
| Mr3 | Test mode, activate relay 3 - see Mr1 | 1 | 0 | 2 | - | S | NO |
| Mr4 | Test mode, activate relay 4 - see Mr1 | 1 | 0 | 2 | - | S | NO |
| Mr5 | Test mode, activate relay 5 - see Mr1 | 1 | 0 | 2 | - | S | NO |
| Mr6 | Test mode, activate relay 6 - see Mr1 | 1 | 0 | 2 | - | S | NO |
| Mt | Manual mode duration (0 = manual mode always active) | 10 | 0 | 90 | min | S | NO |

Parameters Mr* are used to activate the relays manually:

- Mr* = 0 the corresponding relay is deactivated;
- Mr* = 1 the corresponding relay is activated/deactivated automatically by the controller based on the associated function;
- Mr* = 2 the corresponding relay is activated.

The message 'Man' is shown on the display when at least one output is set in manual mode.
After a time set using parameter Mt, automatic operation resumes.

**Caution**: If Mt = 0 operation remains in manual mode until automatic operation resumes.

## 7.5 Control

Various modes are available for controlling the air temperature for the preservation of foodstuffs, depending on which probes are installed and their position. The following figure shows the position of the intake probe (air on) Sr and the outlet probe (air off) Sm. The virtual probe Sv is a weighted average of these two probes, based on parameter /4, according to the following formula:

$$Sv = \frac{Sm \cdot (100 - /4) + Sr \cdot (/4)}{100}$$

| Par. | Description | Def | Min | Max | UOM | User | User terminal |
|---|---|---|---|---|---|---|---|
| /4 | Virtual probe composition: 0 = Air off probe Sm; 100 = Air on probe Sr | 0 | 0 | 100 | % | S | NO |

For example, if /4=50, Sv=(Sm+Sr)/2 represents an estimated value of the air temperature around the refrigerated food.

**Notice**: HACCP: parameter /4 can be set to change the temperature used for control and for display. This operation may be prohibited by HACCP procedures or require record keeping and authorisation.

Example: vertical showcase

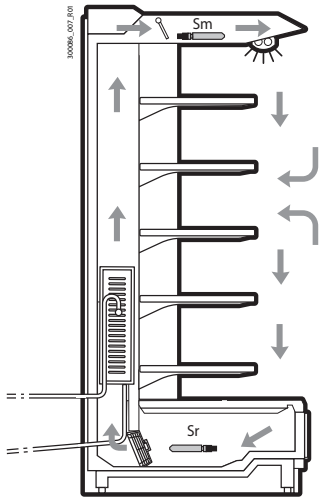


Fig. 7.b

| Ref. | Description |
|---|---|
| Sm | Air off probe |
| Sr | Air on probe |
| Sv | Virtual probe |

During the day, most of the load in a refrigerated showcase is due to warm air that enters from the outside and mixes with the cold air inside. Control based on the air on probe, due to high temperature outside the showcase and the mixing of the air, may not manage to reach the set point. Displaying the intake temperature would show a temperature that is too high. Setting a set point that is too low for the air on probe Sr may cause the food to freeze. On the other hand, displaying the outlet temperature would show a temperature that is too low. This allows the possibility to define the display by setting parameter /t1.

ON/OFF control on the control probe is defined by:
- set point;
- differential

These values determine the control request and consequently, allowing for the protection times, disabling functions or activation/deactivation delays, the activation/deactivation of the compressor.

| Par. | Description | Def | Min | Max | UOM | User | User terminal |
|---|---|---|---|---|---|---|---|
| St | Temperature control set point | 50/122 | r1 | r2 | °C/°F | U | YES |
| rd | Temperature control differential | 2/3.6 | 0.1/0.2 | 99.9/179.2 | Δ °C/°F | S | YES |

**Notice for HACCP**: the set point and differential are critical parameters for food storage.

Modifications to these settings may be prohibited by HACCP procedures or require record keeping and authorisation.
The minimum and maximum value of the set point can be set by parameter.

| Par. | Description | Def | Min | Max | UOM | User | User terminal |
|---|---|---|---|---|---|---|---|
| r1 | Minimum set point | -50/-58 | -99 /-146.2 | r2 | °C/°F | S | NO |
| r2 | Maximum set point | 50/122 | r1 | 200/392 | °C/°F | S | NO |

### Control offset with probe error

| Par. | Description | Def | Min | Max | UOM | User | User terminal |
|---|---|---|---|---|---|---|---|
| ro | Control offset with probe error | 0 | 0 | 20/36 | Δ °C/°F | S | NO |

The iJW controller in standard mode uses the virtual probe Sv for control, that is, the weighted average of the air off and air on probes (see parameter /4). If one of the two probes making up the virtual probe is broken or has an error, parameter ro is used to continue normal control in controlled conditions, without the need for immediate intervention by maintenance personnel. The recommended value of ro is the temperature difference between the air off probe and air on probe reading in steady operating conditions of the refrigeration unit:

$$ro = Sr - Sm$$

The following cases may occur:

- air off probe Sm error: control starts based on the air on probe Sr alone, considering a new set point (St*) determined by the formula:

$$St^* = St + ro \cdot \frac{(100 - '/4')}{100}$$

- air on probe Sr error: based starts on the air off probe Sm alone, considering a new set point (St*) determined by the formula:

$$St^* = St - ro \cdot \frac{'/4'}{100}$$

Notice:

- if ro = 0 the function is not active;
- for night-time operation the new set point is added to the value defined by r4 (= automatic night-time set point variation);
- in the event of errors on both probes, the controller switches to duty setting operation.

Example

Sm fault in daytime operation, with /4=50, St=-4, Sr=0, Sm=-8, ro (recommended) = 0-(-8) = 8.
Then the new control probe will be Sr with:

$$St^* = St + ro \cdot \frac{(100 - '/4')}{100}$$

St*= -4+8 (100-50)/100=0.

If the fault is on Sr, the new control probe will be Sm with:

$$St^* = St - ro \cdot \frac{'/4'}{100}$$

St*= -4-8 ·50/100=-8.

## Duty setting operation

Duty setting is a special function used to maintain control in emergency situations with errors in the temperature control probes, until a service intervention. In the event of a temperature probe error, the controller uses the other probe available and adjusts the set point according to the setting of parameter ro. In the event of errors on both probes, the controller switches to a special mode called "duty setting". Control is activated at regular intervals, operating for a time equal to the value set for the duty setting parameter c4, and off for a fixed time of 15 minutes.

| Par. | Description | Def | Min | Max | UOM | User | User terminal |
|---|---|---|---|---|---|---|---|
| c4 | ON time for duty setting operation (Toff = 15 minutes, fixed value): 0 = compressor always OFF; 100 = compressor always ON. | 0 | 0 | 100 | min | S | NO |

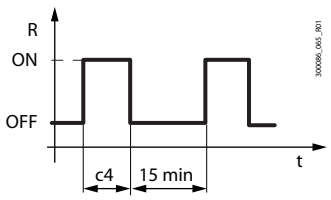


Fig. 7.c

| Ref. | Description |
|---|---|
| R | Control |
| c4 | ON time |
| t | Time |

With duty setting active, during the ON time the solenoid/compressor icon remains on, while it flashes during the OFF time. The table below describes the possible fault situations relating to the control probes and the function that is activated.

| Type of system | Control probe fault | | Control | Parameter |
|---|---|---|---|---|
| | Sm | Sr | | |
| 1 probe | ● | | Duty setting | c4 |
| | | ● | Duty setting | c4 |
| 2 probes | ● | | control on Sr | ro(*) |
| | | ● | control on Sm | ro(*) |
| | ● | ● | Duty setting | c4 |

* Only when ro>0.

Tab. 7.g

## 7.6 Control modes

Three control modes are available, based on the setting of parameter r30:
- r30 = 0, direct with defrost control (default);
- r30 = 1 direct;
- r30 = 2 reverse; operation suitable for hot food showcases;

| Par. | Description | Def | Min | Max | UOM | User | User terminal |
|---|---|---|---|---|---|---|---|
| r30 | Control mode: 0 = direct with defrost; 1 = direct; 2 = reverse | 0 | 0 | 2 | - | S | NO |

The figure shows the behaviour of direct and reverse mode. The difference between direct control and direct control with defrost control is that in the former case defrosting is disabled, while in the latter case it is enabled; defrosting is enabled by default.

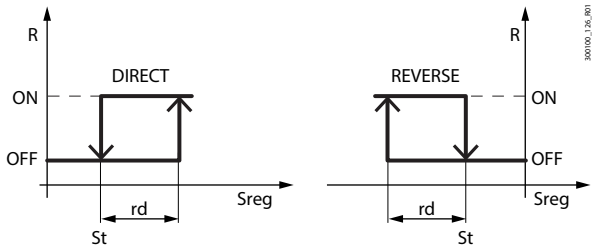


| Ref. | Description |
|---|---|
| St | Set point |
| rd | Differential |
| Sreg | Control probe |
| R | Control request |

Fig. 7.d

ON/OFF control depends on the capacity of the produce to absorb and release heat, as well as on the evaporator cooling time. The temperature therefore fluctuates above and below the set point, and this may cause a decline in the quality of food preservation. Decreasing the differential to make control more precise increases the frequency of compressor on/off cycles. Precision of the measurement is in any case limited by the tolerance of both the controller and the probe.

### 7.6.1 Control with auxiliary compressor

In addition to the main compressor, the iJW controller can manage a second compressor output that either acts as a second control step, with or without rotation, or in parallel with the main compressor:
- auxiliary compressor without rotation (parameter DOk)
- auxiliary compressor with rotation (parameter DOy)
- parallel compressor without rotation (parameter DOw)

#### Stepped control

Control with the auxiliary compressor enabled is illustrated in the figure. If the auxiliary compressor is configured without rotation (par. DOk), the main compressor is always activated first, while if the auxiliary compressor is configured with rotation (par. DOy), on each activation request the compressor that starts first is alternated, with FIFO rotation, so as to balance the operating hours of the two compressors.

The auxiliary compressor is activated with a delay that can be set using parameter c11, to avoid simultaneous starts.

| Par. | Description | Def | Min | Max | UOM | User | User terminal |
|---|---|---|---|---|---|---|---|
| c11 | Second compressor start delay | 4 | 0 | 250 | s | S | NO |
| DOA | Assign solenoid/compressor digital output<br>0 = not configured; 1 = digital output 1 (NO1); 2 = digital output 2 (NO2); 3 = digital output 3 (NO3); 4 = digital output 4 (NO4); 5 = digital output 5 (NO5); 6 = digital output 6 (NO6) | ... | 0 | 6 | - | S | NO |
| DOk | Assign auxiliary compressor without rotation digital output - see DOA | ... | 0 | 6 | - | S | NO |
| DOy | Assign auxiliary compressor with rotation digital output - see DOA | ... | 0 | 6 | - | S | NO |

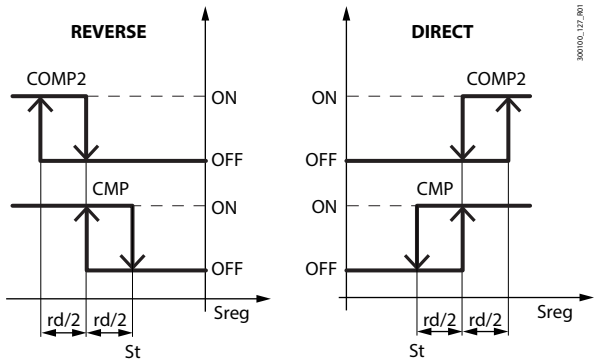


| Ref. | Description |
|---|---|
| St | Set point |
| rd | Differential |
| Sreg | Control probe |
| CMP | Compressor request |
| CMP2 | Auxiliary compressor request |

Fig. 7.e

Parallel control

If the second compressor is configured as an auxiliary parallel compressor, control behaviour and activation of the two outputs are shown in the figure. The delay set by parameter c11 is always observed.

| Par. | Description | Def | Min | Max | UOM | User | User terminal |
|---|---|---|---|---|---|---|---|
| c11 | Second compressor start delay | 4 | 0 | 250 | s | S | NO |
| DOw | Assign auxiliary parallel compressor digital output - see DOA | ... | 0 | 6 | - | S | NO |

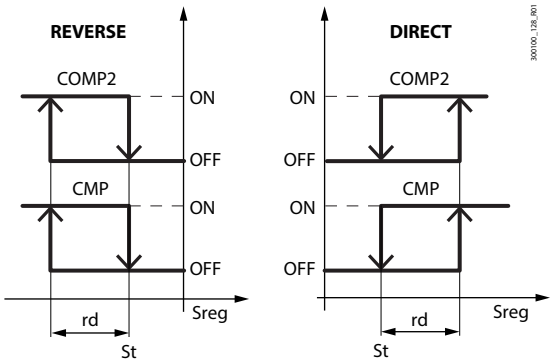


Fig. 7.f

| Ref. | Description |
|---|---|
| St | Set point |
| rd | Differential |
| Sreg | Control probe |
| CMP | Compressor request |
| CMP2 | Auxiliary parallel compressor request |

## 7.6.2 Dead band control

If a digital output has been configured for reverse control in the dead band (par. DOv), control takes into account a dead band around the set point, with an amplitude that can be set using parameter rn. The reverse output is activated with a differential set using parameter rr. Control with dead band varies according to the control mode selected using parameter r30 and whether or not the second auxiliary or parallel compressor is available. The figures show the different behaviour with or without an auxiliary compressor; the behaviour with parallel compressor is similar to when the main compressor only is used.

For the auxiliary compressor, the delay set by parameter c11 is always observed.

| Par. | Description | Def | Min | Max | UOM | User | User terminal |
|---|---|---|---|---|---|---|---|
| r30 | Control mode: 0 = direct with defrost; 1 = direct; 2 = reverse | 0 | 0 | 2 | - | S | NO |
| rn | Dead band | 4.0 / 7.2 | 0.0 | 60.0 /108 | °C/°F | S | NO |
| rr | Reverse output differential | 2.0 / 3.6 | 0.0 | 20.0 /36 | °C/°F | S | NO |
| DOv | Assign reverse digital output with dead band. See DOA. | 0 | 0 | 6 | - | S | NO |

Direct control in dead band without auxiliary compressor

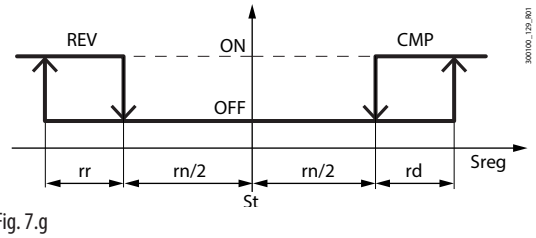


Fig. 7.g

| Ref. | Description |
|---|---|
| St | Set point |
| rd | Differential |
| rn | Dead band |
| rr | Reverse output differential |
| Sreg | Control probe |
| CMP | Compressor request |
| REV | Reverse output request in dead band |
| COMP2 | Auxiliary compressor request (par. DOk or par. DOy) |

Direct control in dead band with auxiliary compressor

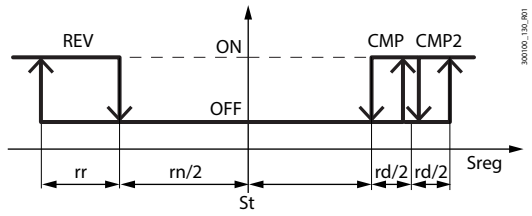


Fig. 7.h

| Ref. | Description |
|---|---|
| St | Set point |
| rd | Differential |
| rn | Dead band |
| rr | Reverse output differential |
| Sreg | Control probe |
| CMP | Compressor request |
| REV | Reverse output request in dead band |
| COMP2 | Auxiliary compressor request (par. DOk or par. DOy) |

Reverse control in dead band without auxiliary compressor

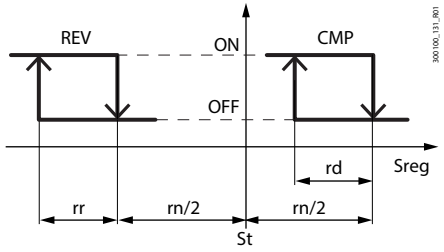


Fig. 7.i

| Ref. | Description |
|---|---|
| St | Set point |
| rd | Differential |
| rn | Dead band |
| rr | Reverse output differential |
| Sreg | Control probe |
| CMP | Compressor request |
| REV | Reverse output request in dead band |
| COMP2 | Auxiliary compressor request (par. DOk or par. DOy) |

Reverse control in dead band with auxiliary compressor

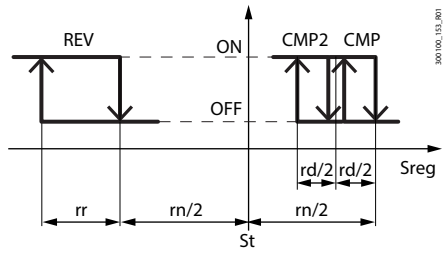


Fig. 7.j

| Ref. | Description |
|---|---|
| St | Set point |
| rd | Differential |
| rn | Dead band |
| rr | Reverse output differential |
| Sreg | Control probe |
| CMP | Compressor request |
| REV | Reverse output request in dead band |
| COMP2 | Auxiliary compressor request (par. DOk or par. DOy) |

## 7.7 Night-time operation

During night-time operation there may be a decrease in thermal load. To avoid excessively low temperatures and high energy consumption, the set point needs to be increased at night by setting parameter r4. Parameter r6a can then be used to select the virtual probe Sv or air on probe Sr as the control probe.

| | Daytime operation | Night-time operation | |
|---|---|---|---|
| | | r6a = 0 | r6a = 1 |
| Control probe | Sv | Sv | Sr |
| Set point | St | St + r4 | St + r4 |

Tab. 7.h

Night-time operation can be activated by a digital input configured as a curtain switch, on the user interface, from the supervisor or time bands, with different priorities. If the digital input has been selected, this has the highest priority and the other actions are ignored, while if the digital input has not been selected, the other actions have the same priority and the last one controls the action.
To set the time bands, see "Setting the date/time and time bands".

| Par. | Description | Def | Min | Max | UOM | User | User terminal |
|---|---|---|---|---|---|---|---|
| DIG | Assign curtain switch digital input - see DIA | ... | 0 | 4 | - | S | NO |
| H8 | Output switched with time bands: 0 = Light; 1 = AUX. | 0 | 0 | 1 | - | S | NO |
| r4 | Automatic night set point variation | 0 | -50/-90 | 50/90 | °C/°F | S | NO |
| r6a | Control probe for night-time operation:<br>0 = virtual probe Sv; 1 = intake temperature probe Sr | 0 | 0 | 1 | - | S | NO |
| tS1..8-d | Start time band 1 to 8 day: day - see (td1...8-d) | 0 | 0 | 11 | day | U | NO |
| tS1..8-hh | Start time band 1 to 8 day: hours | 0 | 0 | 23 | hours | U | NO |
| tS1..8-mm | Start time band 1 to 8 day: minutes | 0 | 0 | 59 | minutes | U | NO |
| td1..8-time | Start time band 1 to 8: type of time data for Applica | 00:00:00 | 00:00:00 | 23:59:59 | - | U | NO |
| tE1..8-d | End time band 1 to 8 day: day - see (td1...8-d) | 0 | 0 | 11 | day | U | NO |
| tE1..8-hh | End time band 1 to 8 day: hours | 0 | 0 | 23 | hours | U | NO |
| tE1..8-mm | End time band 1 to 8 day: minutes | 0 | 0 | 59 | minutes | U | NO |

**Notice for HACCP:** verify that modification of the night-time set point (parameter /4) is permitted by site HACCP procedures. If required, obtain the required authorisation and record the changes.

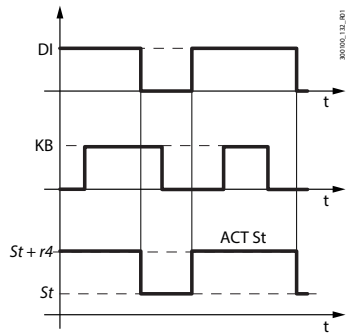


Fig. 7.k

| Ref. | Description |
|---|---|
| St | Set point |
| r4 | Night set point variation |
| DI | Control from digital input |
| ACT St | Effective set point |
| t | time |

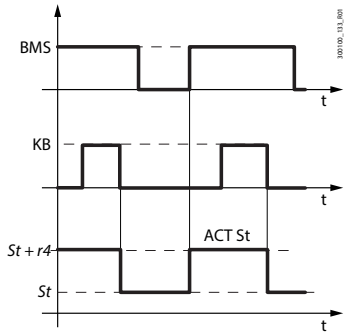


Fig. 7.l

| Ref. | Description |
|---|---|
| St | Set point |
| r4 | Night set point variation |
| BMS | Control from supervisor |
| KB | Control from keypad |
| t | time |

By setting the time bands and setting the light as the switched output (H8 = 0), the set point follows the day/night settings of the time bands:




Fig. 7.m

During day status:
- Set point = St
- control probe Sv
- light or AUX output on, depending on parameter H8

During night status:
- Set point= St + r4
- Control probe Sv or Sr, depending on the value of r6a
- light or AUX output off, depending on parameter H8

## 7.8 ECO operation

During ECO operation, the iJW uses the same control set point St+r4, but with a different differential. This reduces the number of compressor starts/stops and reduces energy consumption. ECO operation can be activated on the user interface or from the supervisor, with the same priority.

**Notice**: the time bands for ECO operation and night operation are the same; the action depends on the setting of parameters r4 and r4d.

| Par. | Description | Def | Min | Max | UOM | User | User terminal |
|---|---|---|---|---|---|---|---|
| rd | Temperature control differential | 2 /3.6 | 0.1/0.2 | 99.9/ 179.2 | Δ °C/°F | S | YES |
| r4d | Temperature control differential in ECO mode | 4/7.2 | 0.1/0.2 | 99.9/ 179.2 | Δ °C/°F | S | NO |

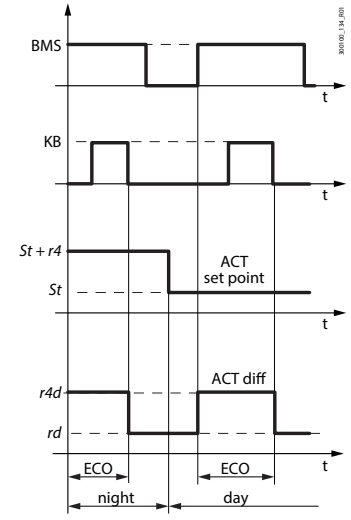


| Ref. | Description |
|---|---|
| r4d | Differential in ECO operation |
| r4 | Night set point variation |
| KB | Control from keypad |
| BMS | Control from supervisor |
| ACT Diff | Effective differential |
| ECO | ECO operation |
| night | Night-time operation |
| t | Time |

Fig. 7.n

**Notice**: if the door switch digital input is configured, opening the door causes the changeover from ECO operation to normal operation.

## 7.9 Continuous cycle

Continuous cycle is a function used to keep the refrigeration cycle active continuously for a settable duration (parameter cc), irrespective of the temperature inside the unit. This may be useful when requiring a rapid decrease in the temperature, even below the set point. Continuous cycle ends when the time set for cc is reached or when the temperature falls below the set point by the value set for parameter ccE.

Caution: the unit of measure of parameter cc is hours.

| Par. | Description | Def | Min | Max | UOM | User | User terminal |
|---|---|---|---|---|---|---|---|
| c7 | Defrost priority over continuous cycle: 0 = same priority; 1 = defrost has priority. | 0 | 0 | 1 | - | S | NO |
| cc | Running time in continuous cycle, 0 = disabled | 0 | 0 | 15 | h | S | NO |
| ccE | Set point delta to end continuous cycle | 1.5 /2.7 | 0.0 | 9.9/17.8 | Δ °C/°F | S | NO |

Continuous cycle can be activated by digital input, from the supervisor, on reaching the high temperature threshold AH/AHA or from the user interface. During the continuous cycle, the solenoid valve/compressor output (with icon) is activated.

Notice:

6. the continuous cycle cannot be activated if:
   - the duration of the continuous cycle is set to 0 (cc = 0);
   - the temperature is below the control set point
   - the device is OFF.
7. The continuous cycle remains in standby if:
   - the compressor is waiting for the times to elapse (c1, c3);
   - the immediate or delayed alarm from external digital input is active;
   - defrost, dripping, post-dripping are running;
   - the door is open. When the door is opened, the continuous cycle is interrupted. It restarts for the remaining time when the door is closed.
8. The continuous cycle ends:
   - when deactivating the direct function from the user terminal (see "Direct functions");
   - when reaching the low temperature threshold (AL or AL2 with double thermostat), whichever is reached first;
   - at the end of the time cc;
   - when the controller is switched off from the supervisor (logical OFF);
   - from the supervisor.

The continuous cycle ends:

- on deactivation by digital input, from the supervisor or user interface;
- on reaching the time cc;
- on reaching the threshold St-ccE;
- when there is a defrost request (if c7 = 1);
- when the iJW controller is switched to OFF status.

### Defrost priority over continuous cycle

| Par. | Description | Def | Min | Max | UOM | User | User terminal |
|---|---|---|---|---|---|---|---|
| c7 | Defrost priority over continuous cycle: 0 = same priority; 1 = defrost has priority. | 0 | 0 | 1 | - | S | NO |

If c7 = 0, the continuous cycle has priority over defrosting: any defrost requests remain on hold while the continuous cycle is running. If c7=1, defrost requests that are activated when the continuous cycle is running terminate the latter and the defrost starts.

## 7.10 Custom set points

On the iJW controller the temperature and humidity set points can be selected from sets of preset values. This is done using the Applica app or the Applica Desktop configuration software, by setting parameter St_Idx. The preset set point values can be changed by setting parameters Sc1, Sc2, Sc3, Sh1, Sh2, Sh3 in the Applica app or Applica Desktop configuration software.

| Par. | Description | Def | Min | Max | UOM | User | User terminal |
|---|---|---|---|---|---|---|---|
| Sc1 | Custom temperature set point 1 | 0 | r1 | r2 | °C/°F | S | NO |
| Sc2 | Custom temperature set point 2 | 0 | r1 | r2 | °C/°F | S | NO |
| Sc3 | Custom temperature set point 3 | 0 | r1 | r2 | °C/°F | S | NO |
| St_Idx | Custom set point index | 0 | 0 | 3 | - | S | NO |
| Sh1 | Custom humidity set point 1 | 0 | 0 | 100 | %RH | S | NO |
| Sh2 | Custom humidity set point 2 | 0 | 0 | 100 | %RH | S | NO |
| Sh3 | Custom humidity set point 3 | 0 | 0 | 100 | %RH | S | NO |

## 7.11 Compressor

The iJW controller can manage On/Off compressors, after appropriately configuring the outputs and corresponding parameters. The control request is sent to the main compressor and the auxiliary compressor, as described in "Control".

## 7.11.1 Compressor protection times

The controller features the following compressor protection parameters.

| Par. | Description | Def | Min | Max | UOM | User | User terminal |
|---|---|---|---|---|---|---|---|
| c0 | Delay to enable solenoid/compressor and evaporation fans at power-on | 0 | 0 | 240 | min | S | NO |
| c1 | Min time between consecutive compressor starts | 0 | 0 | 15 | min | S | NO |
| c2 | Min compressor OFF time | 0 | 0 | 15 | min | S | NO |
| c3 | Min compressor ON time | 0 | 0 | 15 | min | S | NO |
| d9 | Defrost priority over compressor protection times:<br>0 = compressor (the protection times are observed);<br>1 = defrost (the protection times are ignored, therefore defrosting has higher priority and overrides the compressor times). | 10 | 0 | 1 | - | S | NO |

- c0 is used to delay the start of control when the device is powered on. This function is useful for protecting the compressor and the driving relay from repeated on cycles in the event of frequent voltage drops.
- c1 sets the minimum time between two successive starts of the compressor, irrespective of the request. This parameter can be used to limit the maximum number of starts per hour;
- c2 sets the minimum compressor off time. The compressor will not be started again until the minimum time set has elapsed;
- c3 sets the minimum compressor running time. The compressor will not be started again until the minimum time set has elapsed;
- d9 disables the compressor protection times when defrosting:
  - d9 = 0: the compressor protection times are observed;
  - d9 = 1: the compressor protection times are ignored, therefore defrosting has higher priority over the compressor protection times.

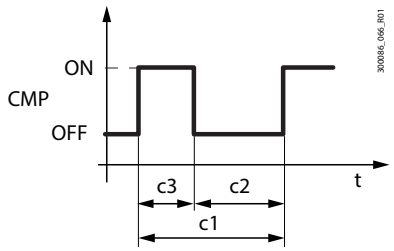


| Ref. | Description |
|---|---|
| CMP | Compressor |
| t | time |

Fig. 7.o

Notice:
- set the protection parameters as declared by the compressor manufacturer, improper use of these parameters may affect the compressor's working life;
- in the event of duty setting operation (see the corresponding paragraph), if the on time c4 is less than c3, the compressor remains on for the time c3.

## 7.11.2 Pump down

When the compressor stops, the pump down procedure can be performed to empty the evaporator. The pump down procedure can end by pressure or by time, as set by parameter c10.

| Par. | Description | Def. | Min | Max | UOM | User | User terminal |
|---|---|---|---|---|---|---|---|
| cPt | Maximum pump down time (0 = pump down disabled) | 0 | 0 | 900 | s | S | NO |
| c8 | Compressor start delay after opening the pump down valve | 5 | 0 | 60 | s | S | NO |
| c9 | Restart during pump down:<br>0 = disabled; 1 = enabled. | 1 | 0 | 1 | - | S | NO |
| c10 | Pump down by pressure or time:<br>0 = pressure; 1 = time. | 0 | 1 | 1 | - | S | NO |
| DIt | Assign low pressure switch digital input:<br>0 = disabled; 1 = DI1; 2 = DI2; 3 = D1H; 4 = D2H | 0 | 0 | 4 | - | S | NO |
| DOn | Assign liquid valve digital output:<br>0 = disabled;<br>1 = NO1; 2 = NO2; 3 = NO3; 4 = NO4; 5 = NO5; 6 = NO6 | 0 | 0 | 6 | - | S | NO |

The pump down procedure can be activated if the liquid valve digital output is configured and parameter cPt > 0. When there is a request to stop the compressor, the liquid valve is closed until the low pressure switch is activated or the time cPt elapses, based on the setting of parameter c10.
If pump down is set to end by pressure and the pressure switch is not activated before the time cPt, the procedure is terminated when the time expires, and the Pump down ended after maximum time alarm Pd is generated.
The Pd alarm is reset when the unit is switched off, if the low pressure switch is activated after the compressor has stopped, or when the control temperature rises above the threshold St+rd.

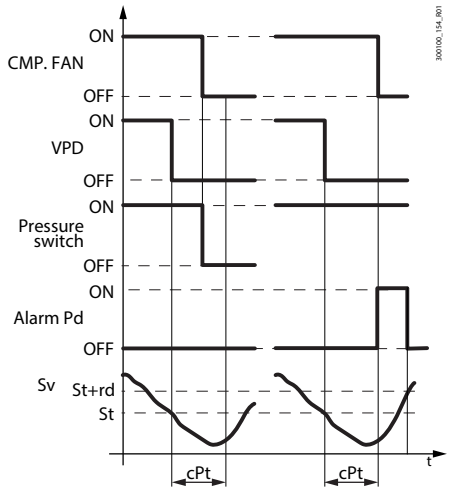


Fig. 7.p

| Ref. | Description |
|---|---|
| St | Set point |
| rd | Control differential |
| Sv | Control threshold |
| PRESSURE SWITCH | Low pressure switch |
| CMP, FAN | Compressor request |
| VPD | Liquid valve output |
| ALARM Pd | Pump down ended after maximum time alarm |
| cPt | Pump down time |

If during pump down the status of the low pressure switch changes again and restart during pump down is enabled by setting parameter c9 = 1, the procedure ends, the compressor restarts and a Restart in pump down alarm Ats is generated. Alarm Ats is reset when a pump down procedure is completed correctly.

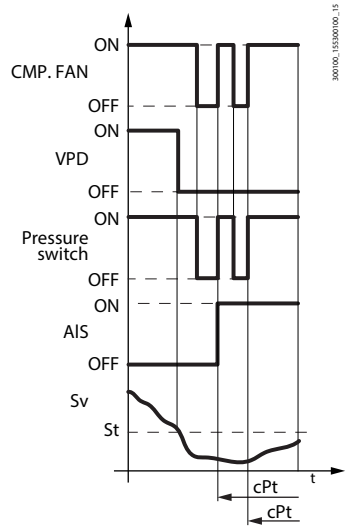


Fig. 7.q

| Ref. | Description |
|---|---|
| St | Set point |
| rd | Control differential |
| Sv | Control threshold |
| PRESSURE SWITCH | Low pressure switch |
| CMP, FAN | Compressor request |
| VPD | Liquid valve output |
| Ats | Restart in pump down alarm |
| cPt | Pump down time |

When the compressor starts, the liquid valve is opened for the time set by parameter c8, to allow the pressure to equalise. If c8 = 0 pump down at start-up is disabled.

## 7.12 Defrost

### Introduction

The iJW controller can manage different types of defrosts, based on the setting of parameter d0. The defrost can end by temperature, in which case the defrost probe Sd must be installed, or by time. At the end of the defrost the dripping phase may begin (if dd>0), during which the compressor and the fans are off, followed by the post-dripping phase (if Fd>0), during which control resumes and the fans work based on the setting of parameter Fpd. The type of display on the user terminal during defrosting can be selected by setting parameter d6.

| Code | Description | Def | Min | Max | UOM | User | User terminal |
|---|---|---|---|---|---|---|---|
| Dlc | Assign enable defrost digital input - see DIA | ... | 0 | 4 | - | S | NO |
| Dld | Assign start defrost digital input - see DIA | ... | 0 | 4 | - | S | NO |
| /d1 | Assign end defrost probe:<br>1 outlet temperature (Sm)<br>2 defrost temperature (Sd)<br>3 intake temperature (Sr)<br>4 not used<br>5 not used<br>6 auxiliary evaporator defrost temperature (Sd2)<br>7 auxiliary probe 1<br>8 auxiliary probe 2<br>9 ambient temperature<br>10 not used<br>11 glass temperature<br>12 not used<br>13 condensing temperature<br>14 humidity<br>15 frost protection temperature<br>16 product temperature | 2 | 1 | 16 | - | S | YES |
| /d2 | Assign auxiliary evaporator end defrost probe - see /d1 | 6 | 1 | 16 | - | S | YES |

| Code | Description | Def | Min | Max | UOM | User | User terminal |
|---|---|---|---|---|---|---|---|
| d0 | Type of defrost<br>0 heater by temperature<br>1 hot gas by temperature<br>2 heater by time<br>3 hot gas by time<br>4 heater by time with temperature control | 0 | 0 | 4 | - | S | NO |
| dt1 | End defrost temperature (read by Sd) | 4/39.2 | -50/-58 | 50/122 | °C/°F | S | YES |
| dt2 | Auxiliary evaporator end defrost temperature (read by Sd2) | 4/39.2 | -50/-58 | 50/122 | °C/°F | S | YES |
| dP1 | Maximum defrost duration | 45 | 1 | 240 | min | S | YES |
| dP2 | Max auxiliary evaporator defrost duration | 45 | 1 | 240 | min | S | YES |
| d6 | Display on terminals during defrost:<br>0 = temperature alternating with 'dEF'; 1 = freeze display; 2 = 'dEF'. | 1 | 0 | 2 | - | S | YES |
| dd | Dripping time after defrost (fans off): 0 = no dripping | 2 | 0 | 15 | min | S | NO |
| d7 | Skip defrost: 0 = Disabled - 1 = Enabled | 0 | 0 | 1 | - | S | NO |
| d8 | Bypass high temperature alarm time after defrost | 1 | 1 | 240 | hours | S | YES |
| d10 | Compressor ON time for running time defrost<br>0 = function disabled | 0 | 0 | 240 | min | S | NO |
| d11 | Defrost temperature threshold in running time mode | -50/-58 | -50/-58 | 50/122 | °C/°F | S | NO |
| d15 | Start defrost delay | 0 | 0 | 240 | min | S | NO |
| dn | Nominal defrost duration for skip defrost | 75 | 0 | 100 | % | S | NO |
| F2 | Evaporator fans with compressor off:<br>0 = see F0;<br>1 = always off with compressor off;<br>2 = on for anti-stratification;<br>3 = on for humidity control. | 1 | 0 | 3 | - | S | NO |
| F3 | Evaporator fans during defrost: 0 = on - 1 = off | 1 | 0 | 1 | - | S | NO |
| Fd | Post-dripping time after defrost<br>(fans off with control active) | 2 | 0 | 15 | min | S | NO |
| Fpd | Evaporator fans during post-dripping<br>0/1 = On/Off | 1 | 0 | 1 | - | S | NO |
| A3 | Defrost terminated after maximum time signal:<br>0 = Disabled 1 = Enabled | 0 | 0 | 0 | - | S | YES |

Below is the trend of the defrost output based on the setting of parameter d0.

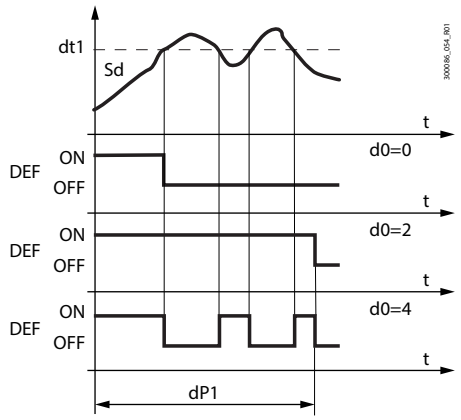


Fig. 7.r

| Ref. | Description |
|---|---|
| t | time |
| dt1 | End defrost temperature |
| dP1 | Maximum defrost duration |
| Sd | Defrost probe |
| DEF | Defrost |
| d0 | Type of defrost |

The heater defrost by time with temperature control (d0=4) activates the defrost output only if the evaporator temperature (Sd) is less than the value of parameter dt1, and ends after the time defined by dP1. This function is useful for energy saving and to prevent excessive temperatures on the evaporator.
Parameters td1 to td8 can be used to set up to 8 defrost events based on the controller's clock (RTC), on models where featured.

To set parameters td1 to td8, use the supervisor, the Applica Desktop configuration software or the Applica app. See "Configuration tools".

| Code | Description | Def. | Min | Max | UOM | User | User term. |
|---|---|---|---|---|---|---|---|
| td1..8-d | Defrost 1 to 8 - day<br>0 event disabled<br>1 to 7 Monday to Sunday<br>8 Monday to Friday<br>9 Monday to Saturday<br>10 Saturday & Sunday<br>11 every day | 0 | 0 | 11 | - | U | NO |
| td1..8-hh | Defrost 1 to 8 - hours | 0 | 0 | 23 | hours | U | NO |
| td1..8-mm | Defrost 1 to 8 - minutes | 0 | 0 | 59 | min | U | NO |
| td1..8-time | Defrost 1 to 8 - data type for Applica | 00:00:00 | 00:00:00 | 23:59:59 | - | U | NO |

## Input and output settings

| Code | Description | Def. | Min | Max | UOM | User | User term. |
|---|---|---|---|---|---|---|---|
| /Fb | Assign defrost temperature probe (Sd) - see /FA | 0 | 0 | 7 | - | S | NO |
| /cb | Defrost temperature probe (Sd) calibration | 0 | -20/ -36 | 20/ 36 | Δ °C/°F | S | NO |
| /FF | Assign auxiliary evaporator defrost temperature probe (Sd2) - see /FA | 0 | 0 | 7 | - | S | NO |
| /cF | Auxiliary evaporator defrost temperature probe (Sd2) calibration | 0 | -20/ -36 | 20/ 36 | Δ° C/°F | S | NO |
| DOG | Assign defrost digital output - see DOA | ... | 0 | 6 | - | S | NO |
| rOG | Defrost digital output logic - see rOA | 0 | 0 | 1 | - | S | NO |
| DOH | Assign auxiliary evaporator defrost digital output - see DOA | ... | 0 | 6 | - | S | NO |
| rOH | Auxiliary evaporator defrost digital output logic - see rOA | 0 | 0 | 1 | - | S | NO |

## Start defrost

The events that activate a defrost are shown in the table.

| Event | Defrosting |
|---|---|
| Interval between defrosts expired | Dependent on enabling (dI > 0) |
| Time band | Dependent on enabling (time bands set) and presence of the RTC |
| Compressor running time | Dependent on enabling (d10>0 and Sd<d11) |
| Start-up | Dependent on enabling (d4=1) |
| At each compressor start | Dependent on enabling (Sd < d11) |
| Digital input | Dependent on enabling (DId > 0) |
| Supervision | Always |
| Keypad/Direct function | Dependent on the presence of the button/enabling of the direct function |
| App/Commissioning tool | Always |
| Opening the door | Dependent on enabling (DcL > 0) |

Tab. 7.i

### Start defrost

The iJW controller can manage the following types of defrosts, based on the setting of parameter d0:

1. heater (placed near the evaporator) by temperature;
2. hot gas by temperature;
3. heater by time;
4. hot gas by time;
5. heater by time with temperature control.

The details of each type of defrost are illustrated in the following paragraphs.
If defrost by temperature is selected, it is performed only if the value read by the evaporation temperature probe Sd is lower than the defrost end value (dt1 and dt2) or has an error. This also applies when there are two evaporators.

For heater defrosts:

- first the time d15 elapses (if configured);
- the compressor stops (performing pump down, if enabled);
- the main and secondary evaporator defrost relays are activated to switch on the heaters.

During hot gas defrost:

- first the time d15 elapses (if configured);
- then the compressor stops;
- the time dHG/2 elapses;
- the main and secondary evaporator defrost relays are activated to open the hot gas valve;
- the time dHG/2 elapses;
- the compressor starts;

**Notice**: if parameter dHG has a value other than zero, pump down is not performed during hot gas defrost.

**Notice**: if the control temperature is lower than the low temperature alarm threshold (parameter AL or ALA), the compressor cannot start and therefore the hot gas defrost will not be performed. If the temperature falls below the alarm threshold during defrosting, the compressor will stop immediately.

### End defrost

The defrost ends by temperature when the values set by parameters dt1 and dt2 are reached, or by time, when the values dP1 and dP2 are reached, based on the setting of parameter d0.
If defrost by temperature is selected, the defrost probe Sd needs to be installed; the defrost ends when the probe Sd measures a value greater than the setting of dt1 or by timeout after the maximum time dP1 has elapsed; in this case, based on the setting of parameter A3, Ed1 is displayed. If set to end by time, the defrost ends after the time dP1.
The heater defrost by time with temperature control (d0=4) activates the defrost output only if the evaporator temperature Sd is less than the value of parameter dt1, and ends after the time defined by dP1. This function is useful for energy saving and to avoid excessively heating the evaporator.

For units with two evaporators, the defrost ends when both evaporators have reached the end defrost condition. If one evaporator ends defrosting (by time or by temperature) before the other, the corresponding defrost relay is de-energised, while the compressor remains in the status required by the defrost.

For hot gas defrost, when the defrost ends:

- the compressor stops;
- the time dHG/2 elapses;
- the main and secondary evaporator defrost relays are deactivated to deactivate the hot gas valve.
- the time dHG/2 elapses;
- the compressor starts;

At the end of the defrost, the controller can activate the dripping phase (if dd>0), during which the compressor and the fans are off, followed by the post-dripping phase (if Fd>0), during which control resumes with the fans off. If the defrost ends prematurely (e.g. interrupted by keypad/BMS), the dripping and post-dripping phases are skipped.
The type of display on the user terminal during defrosting can be selected by setting parameter d6.

**Notice**: high temperature alarms can be disabled after defrosting by setting par. d8.

## 7.12.1 Heater defrost (d0 = 0, 2, 4): duty cycle

The operating stages of heater defrosting with compressor ON/OFF and pump down enabled are shown below.
The duty cycle refers to the default values of parameters F2 and F3.

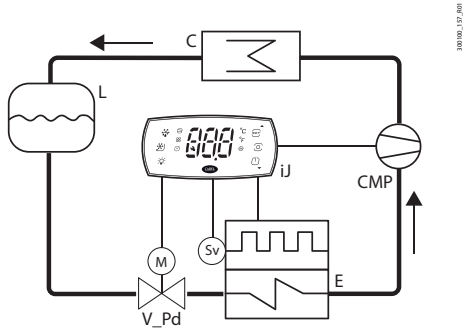


Fig. 7.s

| Ref. | Description |
|---|---|
| t | Time |
| FAN | Evaporator fan |
| DEF | Defrost |
| DRIP | Dripping |
| CMP | Compressor |
| PDRIP | Post-dripping |
| REG | Control |

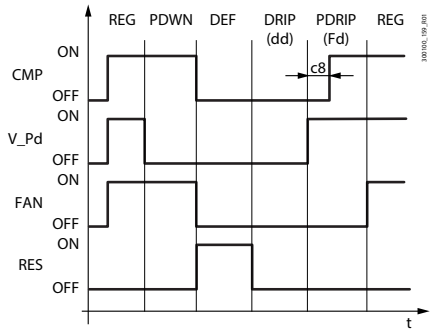


Fig. 7.t

| Ref. | Description |
|---|---|
| RES | Defrost heater |
| V_Pd | Pump down valve |
| C | Condenser |
| E | Evaporator |
| L | Liquid receiver |
| PDWN | Pump down |

## 7.12.2 Hot gas defrost (d0 = 1, 3): duty cycle

The operating stages of hot gas defrosting with compressor ON/OFF and pump down enabled are shown below. The duty cycle refers to the default values of parameters F2 and F3.

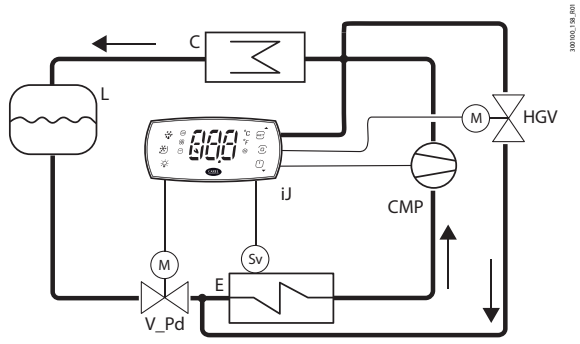


Fig. 7.u

| Ref. | Description |
|---|---|
| t | Time |
| FAN | Evaporator fan |
| DEF | Defrost |
| DRIP | Dripping |
| CMP | Compressor |
| PDRIP | Post-dripping |
| PDWN | Pump down |

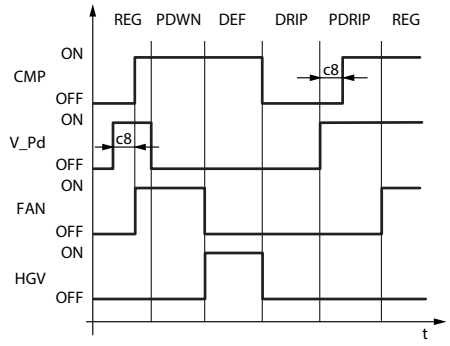


Fig. 7.v

| Ref. | Description |
|---|---|
| REG | Control |
| HGV | Hot gas valve |
| V_Pd | Pump down valve |
| C | Condenser |
| E | Evaporator |
| L | Liquid receiver |

**Notice**: the defrost output (par. DOG) is used to control the hot gas valve HGV.

Pump down is the period in which the evaporator is emptied of liquid refrigerant, and can be disabled by setting cPt=0 (see "Pump down"). Operation of the fan during the pump down phase depends on parameters F2 and F3. During the dripping phase the fan is always off, while during the post-dripping phase operation depends on the setting of parameter Fpd.

| Code | Description | Def | Min | Max | UOM | User | User terminal |
|---|---|---|---|---|---|---|---|
| dd | Dripping time after defrost (fans off)<br>0 = no dripping | 2 | 0 | 15 | min | S | NO |
| cPt | Pump down phase duration 0 = pump down disabled | 0 | 0 | 900 | s | S | NO |
| F0 | Evaporator fan management:<br>0 = always on;<br>1 = activation based on Sd – Sv;<br>2 = activation based on Sd;<br>3 = activation based on Sv. | 0 | 0 | 3 | - | S | NO |
| F2 | Evaporator fans with compressor off:<br>0 = see F0;<br>1 = always off with compressor off;<br>2 = on for anti-stratification;<br>3 = on for humidity control | 1 | 0 | 3 | - | S | NO |
| F3 | Evaporator fans during defrost: 0 = on - 1 = off | 1 | 0 | 1 | - | S | NO |
| Fd | Post-dripping time after defrosting (fans off with control active) | 2 | 0 | 15 | min | S | NO |

## 7.12.3 Advanced defrosting features

Maximum interval between consecutive defrosts (par. dI)

| Code | Description | Def | Min | Max | UOM | User | User terminal |
|---|---|---|---|---|---|---|---|
| dI | Maximum interval between consecutive defrosts | 8 | 0 | 240 | hours | S | YES |

Tab. 7.j

Parameter dI is a safety parameter used to perform cyclical defrosts every "dI" hours, event without the real time clock (RTC). At the start of each defrost, irrespective of the duration, an interval starts being counted. If this interval exceeds dI without a defrost being performed, one is started automatically. The count is always active even if the controller is OFF.

Example.
If the defrost programmed by time td3 is not carried out due to a fault in the RTC, a new defrost starts after the safety time dI.

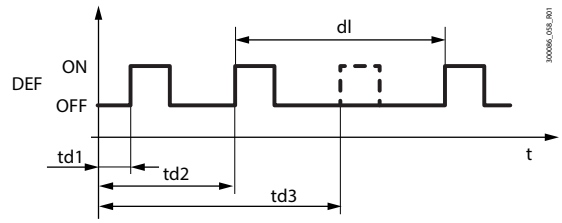


| Ref. | Description |
|---|---|
| dI | Maximum interval between consecutive defrosts |
| td1 - td3 | Scheduled defrosts |
| t | time |
| DEF | Defrost |

Fig. 7.w

Notice:
- if the interval dI expires when the controller is OFF, a defrost will be performed when it is switched ON;
- to ensure correct defrosting, the interval between defrosts must be greater than the maximum defrost duration, increased by the dripping and post-dripping times.

Notice: to avoid unwanted defrosts controlled by the timer, set parameter dI=0 (defrosts from keypad, RTC, compressor running time or digital input only).

### Running time defrost (par. d10, d11)

Running time is a special function that determines when the refrigeration unit needs defrosting. Specifically, it is assumed that if the compressor remains on for a certain period (d10) and the evaporator temperature measured by probe Sd remains constantly below the threshold (d11), there is possibly ice on the evaporator and therefore defrosting is required. The time is reset if the temperature returns above the threshold.

| Code | Description | Def | Min | Max | UOM | User | User terminal |
|---|---|---|---|---|---|---|---|
| dt1 | End defrost temperature (read by Sd) | 4/ 39.2 | -50 /-58 | 50/122 | °C/°F | S | YES |
| dt2 | Auxiliary evaporator end defrost temperature (read by Sd2) | 4/ 39.2 | -50 /-58 | 50/122 | °C/°F | S | YES |
| d10 | Compressor ON time for running time defrost<br>0 = function disabled | 0 | 0 | 240 | min | S | NO |
| d11 | Defrost temperature threshold in running time mode | -50 /-58 | -50 /-58 | 50/122 | °C/°F | S | NO |

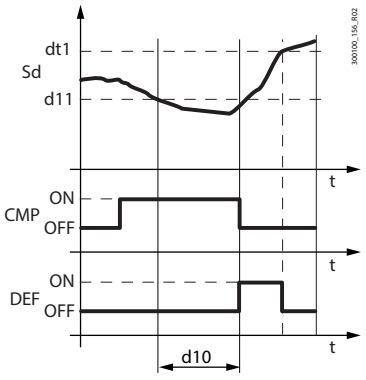


| Ref. | Description |
|---|---|
| Sd | Defrost probe |
| t | time |
| DEF | Defrost |
| CMP | Compressor |

Fig. 7.x

### Defrost at each compressor start

With defrosts controlled by temperature, if the evaporator temperature is lower than d11 when there is a cooling request, preventive defrosting is required before starting the compressor. This avoids starting the compressor and then stopping immediately afterwards, thus reducing the number of compressor starts.

Notice: this condition is not verified the first time the compressor is started after switching the unit on.

### Defrost after opening the door

Opening the door allows humid air into the showcase, which can condense and freeze on the evaporator. Consequently, the controller records the number of door openings that occur when the evaporation temperature is below zero. When the door is opened a number of times equal to the setting of DoL, a defrost is activated. The controller checks the defrost duration and adjusts the number of door openings that must be reached before the next defrost.

| Par. | Description | Def | Min | Max | UOM | User | User terminal |
|---|---|---|---|---|---|---|---|
| dCH | Defrost after opening the door: maximum number of openings | 50 | dcL | 99 | - | S | NO |
| dcL | Defrost after opening the door: minimum number of openings | 0 | 0 | dCH | - | S | NO |
| dPH | Defrost after opening the door: maximum defrost duration | 15 | dPL | dP1 | min | S | NO |
| dPL | Defrost after opening the door: minimum defrost duration | 5 | 0 | dPH | min | S | NO |

If the defrost duration:
- is lower than dPL, the number of door openings required to activate the next defrost is increased by 10;
- is higher than dPH, the number of door openings required to activate the next defrost is decreased by 5;
- is between dPL and dPH, the number of door openings required to activate the next defrost remains unchanged.

In any case, the number of door openings always remains between the minimum and maximum limits dcL and dcH.

**Notice**: the door opening counter is reset every time a defrost is performed.

### Skip defrost (par. d7, dn)

If defrosts ending by temperature are set, the skip defrost function evaluates whether the defrost duration is less than a certain threshold dn1 (dn2) and based on this establishes whether or not the following defrosts can be skipped.

| Code | Description | Def | Min | Max | UOM | User | User terminal |
|---|---|---|---|---|---|---|---|
| dP1 | Maximum defrost duration | 45 | 1 | 240 | min | S | YES |
| dP2 | Max auxiliary evaporator defrost duration | 45 | 1 | 240 | min | S | YES |
| d7 | Skip defrost: 0 = Disabled - 1 = Enabled | 0 | 0 | 1 | - | S | NO |
| dn | Nominal defrost duration for skip defrost | 75 | 0 | 100 | % | S | NO |

Thresholds dn1 (evaporator 1) and dn2 (evaporator 2) are calculated based on the parameter settings:

$$dn1 = \frac{dn}{100} \cdot dP1 \qquad dn2 = \frac{dn}{100} \cdot dP2$$

The algorithm keeps a counter of the defrosts to be skipped:
- at power-on, the defrost is performed 7 times without increasing the counter, from the eighth on the counter is updated.
- if the defrost ends in a time less than dn1 (dn2), the counter of the defrosts to be skipped is increased by 1;
- when the counter has a value of 1, the next defrost is skipped; if the next defrost ends in a time less than dn1 (dn2), the counter is increased to 2 and the next 2 defrosts are skipped; if the next defrost also ends in a time less than dn1 (dn2), the counter is increased and the next 3 defrosts are skipped, the counter is reset and the algorithm restarts (see the table).

| Defrost sequence | 1 | 2 | 3 | 4 | 5 | 6 | 7 | 8 | 9 | 10 | 11 | 12 | 13 | 14 | 15 | 16 | 17 | 18 | 19 | 20 | 21 | 22 |
|---|---|---|---|---|---|---|---|---|---|---|---|---|---|---|---|---|---|---|---|---|---|---|
| Defrost duration < dn1? | - | - | - | - | - | - | - | S | - | S | - | - | S | - | - | - | S | - | S | - | - | S |
| Counter | - | - | - | - | - | - | - | 1 | - | 2 | - | - | 3 | - | - | - | 1 | - | 2 | - | - | 3 |
| Defrost skipped? | N | N | N | N | N | N | N | N | S | N | S | S | N | S | S | S | N | S | N | S | S | N |
| | | | | | | | | | | | | | | | | | Restart algorithm | | | | | |

**Notice**: if at any time the defrost ends after dn1 (dn2), the next defrost is performed and the counter is reset.

**Notice**: the algorithm only applies to defrosts scheduled by time bands or cyclical defrosts (par. DI); manual defrosts or those started by the supervisor are always performed and do not affect the counter.

### Auxiliary evaporator defrost

Up to two defrost probes and up to two defrost outputs can be configured, activating a heater on the main evaporator and another on the auxiliary evaporator. The controller recognises the basic configuration shown in the following table:

| Defrost outputs | Evaporator probes | Start defrost |
|---|---|---|
| 1 | 1 | Normal |
| 2 | 1 | Defrosting managed on two outputs with reference to the same defrost probe |
| 1 | 2 | Defrosting managed on the same output with reference to the minimum temperature read by the two defrost probes. Defrosting ends when the temperature of each probe reaches the corresponding end defrost threshold. |
| 2 | 2 | Defrosting managed independently on the two evaporator circuits |

Tab. 7.k

## 7.12.4 Other defrost parameters

### End defrost signal by timeout (par. A3)

| Code | Description | Def | Min | Max | UOM | User | User terminal |
|---|---|---|---|---|---|---|---|
| A3 | End defrost signal by timeout: 0 = disabled; 1 = enabled | 0 | 0 | 1 | - | S | NO |

### Defrost at power on (par. d4)

| Code | Description | Def | Min | Max | UOM | User | User terminal |
|---|---|---|---|---|---|---|---|
| d4 | Enable defrost at power on: 0 = Disabled 1 = Enabled | 0 | 0 | 1 | - | S | NO |

The defrost request at power on has priority over the control request and activation of the continuous cycle.

### Defrost delay at power on (parameter d5)

| Code | Description | Def | Min | Max | UOM | User | User terminal |
|---|---|---|---|---|---|---|---|
| d5 | Defrost delay at start-up or after command from digital input | 0 | 0 | 240 | min | S | NO |

Also active when d4=0. If the digital input is set to enable or start a defrost from an external contact, parameter d5 represents the delay between when the defrost is enabled or called, and when it effectively starts.

### Dripping time after defrost (par. dd)

| Code | Description | Def | Min | Max | UOM | User | User terminal |
|---|---|---|---|---|---|---|---|
| dd | Dripping time after defrost (0 = no dripping) | 2 | 0 | 15 | min | S | NO |

This parameter is used to stop the compressor and the evaporator fans following a defrost so as to allow the evaporator to drip. The value of the parameter indicates the off time in minutes. If dd=0 no dripping time is enabled, and at the end of the defrost control resumes immediately, without stopping the compressor and the fan, if active.

### Pump down phase duration (par. cPt)

| Code | Description | Def | Min | Max | UOM | User | User terminal |
|---|---|---|---|---|---|---|---|
| cPt | Pump down phase duration 0 = pump down disabled | 0 | 0 | 999 | s | S | NO |

The pump down phase is the period in which the evaporator is emptied of liquid refrigerant. Parameter cPt defines the duration of the pump down phase whenever control stops.

### Defrost priority over compressor protection (par. d9)

| Code | Description | Def | Min | Max | UOM | User | User terminal |
|---|---|---|---|---|---|---|---|
| d9 | Defrost priority over compressor protection times:<br>0 = the compressor protection times are observed;<br>d9 = 1: the compressor protection times are ignored, therefore defrosting starts without waiting for the compressor protection times to elapse | 0 | 0 | 1 | - | S | NO |

Parameter d9 can be used to set the defrost priority with respect to compressor protections c1, c2, c3.

### Defrost priority over continuous cycle (par. c7)

| Code | Description | Def | Min | Max | UOM | User | User terminal |
|---|---|---|---|---|---|---|---|
| c7 | Defrost priority over continuous cycle:<br>0 = continuous cycle has priority; 1 = defrost has priority. | 0 | 0 | 1 | - | S | NO |

Parameter c7 is used to set the priority of defrosting over the continuous cycle:
- if c7 = 0, the continuous cycle has priority over the defrost requests;
- if c7 = 1, if the continuous cycle is in progress and there is a defrost request, the continuous cycle ends and the defrost starts.

### Defrost interval unit of measure (par. dC)

| Code | Description | Def | Min | Max | UOM | User | User terminal |
|---|---|---|---|---|---|---|---|
| dC | Time base for defrosts<br>0: dI in hours, dP1 and dP2 in minutes; 1: dI in minutes, dP1 and dP2 in seconds | 0 | 0 | 1 | - | S | NO |

Parameter dC is used to change the unit of measure (hours/minutes or minutes/seconds) used to count the times for parameters dI (defrost interval, hours or minutes), dP1 and dP2 (defrost duration) . This feature is particularly useful when configuring the defrosts.

## 7.13 Evaporator fans

To activate the algorithm, simply assign a relay output to the evaporator fan function. In addition, the defrost probe needs to be configured if this is required for control. See "Inputs and outputs".

| Par. | Description | Def | Min | Max | UOM | User | User terminal |
|---|---|---|---|---|---|---|---|
| DOI | Assign evaporator fan digital output - see DOA | ... | 0 | 6 | - | S | NO |
| rOI | Evaporator fan digital output logic - see rOA | 0 | 0 | 1 | - | S | NO |

The parameters used to manage the fans are shown below.

| Par. | Description | Def | Min | Max | UOM | User | User terminal |
|---|---|---|---|---|---|---|---|
| F0 | Evaporator fan management:<br>0 = always on;<br>1 = activation based on Sd – Sv;<br>2 = activation based on Sd;<br>3 = activation based on Sv. | 0 | 0 | 3 | - | S | NO |
| F1 | Evaporator fan activation threshold (only if F0 = 1, 2, 3) | 5/41 | -50/-58 | 50/122 | °C/°F | S | NO |
| F2 | Evaporator fans with compressor off:<br>0 = see F0;<br>1 = always off with compressor off;<br>2 = on for anti-stratification;<br>3 = on for humidity control | 1 | 0 | 3 | - | S | NO |
| Frd | Evaporator fan activation differential (including variable speed) | 2/3.6 | 0.1/0.2 | 20/ 36 | °C/°F | S | YES |

iJW manages the evaporator fans as follows:
- F0 = 0 always on;
- F0 = 1 on/off based on difference between probes Sd and Sv;
- F0 = 2 on/off based on defrost probe Sd;
- F0 = 3 on/off based control probe Sv.

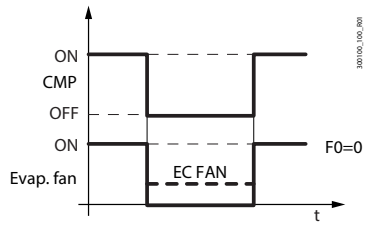


Fig. 7.y

If parameter F0=0, the evaporator fans are on when the compressor is on (based on the setting of parameter F2), regardless of the defrost or control temperature.

If parameter F0=1, 2 or 3, the evaporator fans are on/off based on the difference between the defrost and control probe temperatures, based on the defrost probe reading or the control probe reading. The fans switch on when the control variable falls below the threshold F1 value minus the control differential Frd, and switch off when the control variable rises above the threshold F1.

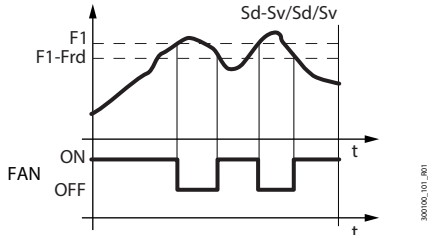


Fig. 7.z

| Ref. | Description |
|---|---|
| Sd | Defrost probe |
| Sv | Control probe |
| F1 | Fan activation threshold |
| Frd | Differential |
| t | time |
| FAN | Evaporator fans |

The fans can be switched off in the following situations:
- when the compressor is off (parameter F2);
- during defrosts (parameter F3).

The evaporator fans can be forced on during control (parameter F2) and during defrosts (parameter F3).

### Evaporator fans during defrost

When defrosting (parameter F3), the fans can be forced off. During the dripping time (parameter dd > 0) the fans are always off, while during the post-dripping time (parameter Fd > 0), the status of the fans can be defined by setting parameter Fpd. This is useful to allow the evaporator to return to temperature after defrosting, thus avoiding blowing warm hot and moist air into the refrigerated environment.

| Par. | Description | Def | Min | Max | UOM | User | User terminal |
|---|---|---|---|---|---|---|---|
| dd | Dripping time after defrost (0 = no dripping) | 2 | 0 | 15 | min | S | NO |
| F3 | Evaporator fans during defrost: 0 = on; 1 = off. | 1 | 0 | 1 | - | S | NO |
| Fd | Post-dripping time after defrosting<br>(fans off with control active) | 2 | 0 | 15 | min | S | NO |
| Fpd | Evaporator fan during post-dripping:<br>0 = on; 1 = off. | 1 | 0 | 1 | - | S | NO |

### Anti-stratification

Set parameter F2 = 2 to prevent stratification of the air inside the showcase when the compressor is off. The fan performs a series of ON and OFF cycles with settable times that differ depending on the time (day or night). When the compressor is switched off, the fan remains ON.

| Par. | Description | Def | Min | Max | UOM | User | User terminal |
|---|---|---|---|---|---|---|---|
| F2 | Evaporator fans with compressor off:<br>0 = see F0;<br>1 = always off with compressor off;<br>2 = on for anti-stratification;<br>3 = on for humidity control. | 1 | 0 | 3 | - | S | NO |
| Fd0 | Evaporator fan ON time for anti-stratification during the day | 5 | 1 | 100 | min | S | NO |
| FdF | Evaporator fan OFF time for anti-stratification during the day<br>(0 = always On during the day) | 10 | 0 | 100 | min | S | NO |
| Fn0 | Evaporator fan ON time for anti-stratification at night | 5 | 1 | 100 | min | S | NO |
| FnF | Evaporator fan OFF time for anti-stratification at night<br>(0 = always On at night) | 20 | 0 | 100 | min | S | NO |

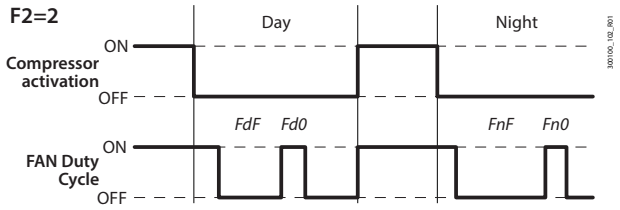


Fig. 7.aa

### Humidity management with evaporator fan cycles

If F2 = 3, when the compressor is off, the fan is controlled based on the humidity level set by parameter HU, selected between three humidity levels: low, medium and high, which correspond to three different sets of fan on/off times and three different control temperature differentials for compressor activation.

| Par. | Description | Def | Min | Max | UOM | User | User terminal |
|---|---|---|---|---|---|---|---|
| HU | Humidity level: 0: low; 1: medium; 2: high. | 1 | 0 | 2 | - | U | NO |
| F2 | Evaporator fans with compressor off:<br>0 = see F0;<br>1 = always off with compressor off;<br>2 = on for anti-stratification;<br>3 = on for humidity control. | 1 | 0 | 3 | - | S | NO |
| F11 | Fan ON time with low humidity level | 60 | 0 | 600 | Sec | S | NO |
| F12 | Fan OFF time with low humidity level | 120 | 0 | 600 | Sec | S | NO |
| F13 | Fan ON time with medium humidity level | 120 | 0 | 600 | Sec | S | NO |
| F14 | Fan OFF time with medium humidity level | 120 | 0 | 600 | Sec | S | NO |
| F15 | Fan ON time with high humidity level | 180 | 0 | 600 | Sec | S | NO |
| F16 | Fan OFF time with medium humidity level | 120 | 0 | 600 | Sec | S | NO |
| F17 | Temperature control differential for<br>compressor activation with low humidity level | 2.0/ 3.6 | 0.1/0.2 | 20/36 | °C/°F | S | NO |
| F18 | Temperature control differential for<br>compressor activation with medium humidity level | 2.0/ 3.6 | 0.1/0.2 | 20/36 | °C/°F | S | NO |
| F19 | Temperature control differential for<br>compressor activation with high humidity level | 2.0/ 3.6 | 0.1/0.2 | 20/36 | °C/°F | S | NO |

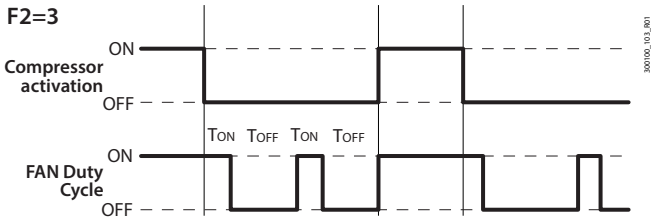


| Ref. | Description |
|---|---|
| TON | F11/F13/F15 |
| TOFF | F12/F14/F16 |

Fig. 7.ab

## 7.14 Condenser fans

To activate the algorithm, simply assign a relay output to the condenser fan function. The condensing temperature probe also needs to be configured if required for control. See "Inputs and outputs".

| Par. | Description | Def | Min | Max | UOM | User | User terminal |
|---|---|---|---|---|---|---|---|
| DOt | Assign condenser fan digital output - see DOA | ... | 0 | 6 | - | S | NO |
| rOt | Condenser fan digital output logic - see rOA | 0 | 0 | 1 | - | S | NO |

The parameters used to manage the fans are shown below.

| Par. | Description | Def | Min | Max | UOM | User | User terminal |
|---|---|---|---|---|---|---|---|
| F00 | Condenser fan management:<br>0 = always on with compressor on<br>1 = activation based on Sc, off with compressor off; | 0 | 0 | 2 | - | S | NO |
| F4 | Condenser fan deactivation temperature | 40/104 | -50/-58 | 200/392 | °C/°F | S | NO |
| F5d | Condenser fan activation differential | 5/9 | 0.1/0.2 | 60/108 | °C/°F | S | NO |

iJW manages the condenser fans as follows:
- F00 = 0 on when the compressor is on;
- F00 = 1 on/off based on the condensing temperature probe Sc; off with the compressor off;

If parameter F00 = 0, the condenser fans are on when the compressor is on, regardless of the condensing temperature.

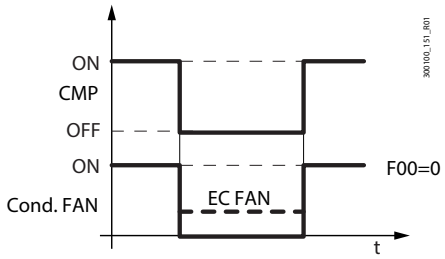


Fig. 7.ac

If parameter F00 = 1, the condenser fans are on/off based on the condensing temperature. When the compressor is first started, the condenser fan will start at F4+0.2 °C (3.6°F) degrees to compensate for rapid increases in temperature that the probe reading cannot react to. Subsequently, the fan switches on and off at F4 + F5d and F4.

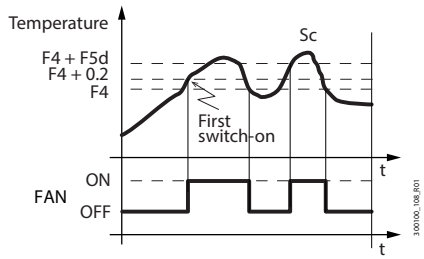


Fig. 7.ad

| Ref. | Description |
|---|---|
| Sc | Condensing temperature probe |
| F4 | Fan deactivation threshold |
| F5d | Differential |
| t | time |
| FAN | Condenser fans |

## 7.15 Humidity management

iJW can manage humidity with or without a humidity probe. If a probe is available, iJW can interact with external systems by managing the humidity level in combination with cooling control. iJW is compatible with the CAREL humiSonic, MC Multizone and humiDisk humidification systems.

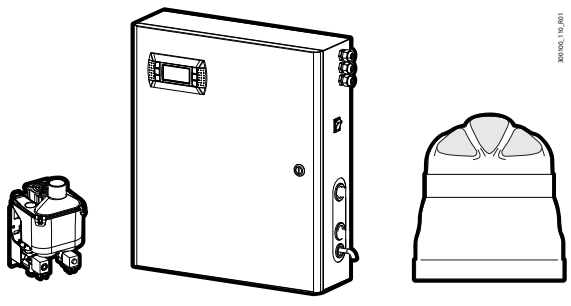

**humiSonic** **mc multizone** **humiDisk**

Fig. 7.ae

## 7.15.1 Humidity control without probe

If no humidity probe is available, humidity control can be performed in three levels, through evaporator fan duty cycles and changing the control temperature differential. See "Humidity management with evaporator fan cycles".

## 7.15.2 Humidity control with probe

Notice: the humidity probe is only available on models with an option that includes the 0-5 V analogue input, see "Introduction".

| Par. | Description | Def | Min | Max | UOM | User | User terminal |
|---|---|---|---|---|---|---|---|
| /FP | Assign humidity probe (fixed on S5) | 0 | 0 | 5 | - | S | NO |
| /cP | Humidity probe calibration | 0 | -20 | 20 | % rH | S | NO |

To enable the input, set the value of /Fp to 5, while to disable it, set the value to 0.
The probe reading can be shown on the display by setting parameter /t1 or can be read under item SHu in the direct functions menu. Furthermore, parameter /ta can be used to alternate the display of the temperature/humidity values.

## 7.15.3 Humidification output settings

To activate the humidifier, a relay needs to be assigned to the "humidifier" function.

| Par. | Description | Def | Min | Max | UOM | User | User terminal |
|---|---|---|---|---|---|---|---|
| DOu | Assign humidification digital output - see DOA | ... | 0 | 6 | - | S | NO |
| rOu | Humidification digital output logic - see rOA | 0 | 0 | 1 | - | S | NO |

## 7.15.4 Dehumidification output settings

To activate an external dehumidifier, a relay needs to be assigned to the "external dehumidifier" function, and in this case its logic will be completely uncoupled from the compressor logic.

| Par. | Description | Def | Min | Max | UOM | User | User terminal |
|---|---|---|---|---|---|---|---|
| DOz | Assign external dehumidifier digital output - see DOA | ... | 0 | 6 | - | S | NO |
| rOz | External dehumidifier digital output logic - see rOA | 0 | 0 | 1 | - | S | NO |

As well as by an external dehumidifier, dehumidification can also be controlled through simultaneous action of the compressor and a heater; in this case, a relay needs to be assigned to the "dehumidification heater" function. To activate dehumidification, simultaneous cooling (compressor) and heating (heater resistance) are required. The effect of cooling is to lower the air relative humidity, while the heater then offsets the excessive cooling, so as to maintain a virtually constant temperature during the process. The dehumidification heater is activated with a fixed differential of 1°C below the temperature control set point, as shown in the figure.

| Par. | Description | Def | Min | Max | UOM | User | User terminal |
|---|---|---|---|---|---|---|---|
| DOj | Assign dehumidification heater digital output - see DOA | ... | 0 | 6 | - | S | NO |
| rOj | Dehumidification digital output logic - see rOA | 0 | 0 | 1 | - | S | NO |

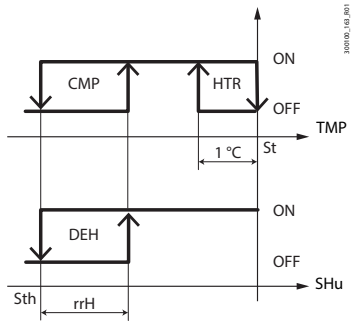


Fig. 7.af

| Ref. | Description |
|---|---|
| CMP | Compressor |
| HTR | Dehumidification heater |
| DEH | External dehumidifier |
| TMP | Temperature |
| SHu | Humidity |
| St | Temperature control set point |
| Sth | Humidity control set point |
| rrH | Dehumidification control differential |

## 7.15.5 Humidity control

### Humidification

The control logic for humidity control with probe is shown in the figure. When the humidity falls below the humidity set point Sth plus the humidity differential rdH, the humidification output is activated.

| Par. | Description | Def | Min | Max | UOM | User | User terminal |
|---|---|---|---|---|---|---|---|
| Sth | Humidity control set point | 90 | 0.0 | 100.0 | % rH | U | YES |
| rdh | Humidity control differential | 5 | 0.1 | 99.9 | % rH | S | YES |
| F4r | Humidification output during defrosts: 0 = active based on humidity control; 1 = deactivated during defrosts | 0 | 0 | 1 | - | S | YES |

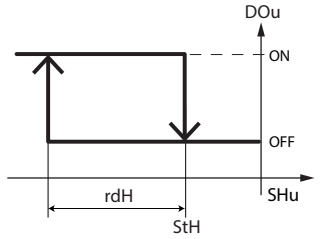


| Ref. | Description |
|---|---|
| SHu | Humidity control probe |
| Sth | Humidity control set point |
| rdh | Humidity control differential |
| DOU | Humidification outlet |

Fig. 7.ag

**Notice:** parameter F4r is used to decide whether or not to disable the humidification output during defrosts:
- F4r=0 -> humidification output active based on humidity control;
- F4r=1 -> humidification output disabled during defrosts, regardless of the request.

**Notice:** the humidification output is always deactivated in the event of an alarm that stops the compressor immediately.
Examples:
- Alarm CHt;
- Alarm IA (when A6 = 0).

### Dehumidification

For humidity control with probe, the dehumidification function can also be managed. The control logic is shown in the figure. When the humidity rises above the humidity set point Sth plus the Dehumidification control differential rrh, the dehumidification output is activated.

| Par. | Description | Def | Min | Max | UOM | User | User terminal |
|---|---|---|---|---|---|---|---|
| Sth | Humidity control set point | 90 | 0.0 | 100.0 | % rH | U | YES |
| rrH | Dehumidification differential | 5 | 0.0 | 50.0 | Δ % rH | S | YES |

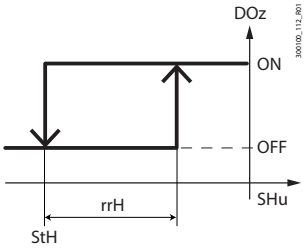


| Ref. | Description |
|---|---|
| SHu | Humidity control probe |
| Sth | Humidity control set point |
| rrH | Dehumidification differential |
| DOz | Dehumidification output |

Fig. 7.ah

### Dead band

Humidity control in the dead band can be enabled by setting both the humidifier and dehumidifier outputs.

| Par. | Description | Def | Min | Max | UOM | User | User terminal |
|---|---|---|---|---|---|---|---|
| Sth | Humidity control set point | 90 | 0.0 | 100.0 | % rH | U | YES |
| rdh | Humidity control differential | 5 | 0.1 | 99.9 | % rH | S | YES |
| rrH | Dehumidification differential | 5 | 0 | 50.0 | Δ % rH | S | NO |
| rnH | Dead band for humidity control | 5 | 0 | 50.0 | Δ % rH | S | NO |

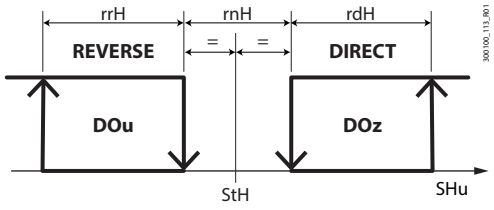


| Ref. | Description |
|---|---|
| SHu | Humidity control probe |
| Sth | Humidity control set point |
| rdh | Humidity control differential |
| rrH | Control differential for dehumidification |
| rnH | Humidity dead band |
| DOu | Humidification outlet |
| DOz | Dehumidification output |

Fig. 7.ai

**Notice:** parameter F4r is used to decide whether or not to disable the humidification output during defrosts:
- F4r=0 -> humidification output active based on humidity control;
- F4r=1 -> humidification output disabled during defrosts, regardless of the request.

## 7.15.6 Simultaneous humidity and temperature control

With simultaneous humidity and temperature control, humidity control is generally independent of temperature control. Humidity control can be restricted to within a well-defined temperature range (parameters TLL and THL and the corresponding differential TdL), so as not to risk excessive temperature drift during humidity control.

| Par. | Description | Def | Min | Max | UOM | User | User terminal |
|---|---|---|---|---|---|---|---|
| TLL | Minimum temperature to enable humidity control | 0 | -60/-76 | 60/140 | °C/°F | S | NO |
| THL | Maximum temperature to enable humidity control | 0 | -60/-76 | 60/140 | °C/°F | S | NO |
| TdL | Differential to enable humidity control | 0 | 0 | 20/36 | °C/°F | U | NO |

**Notice:** if parameters TLL and/or THL are set to 0, they are ignored for control purposes

**Case 1: Humidity control independent of temperature (default)**
The temperature is only controlled after the humidity reaches the set point. This is the default setting, with TLL and THL = 0

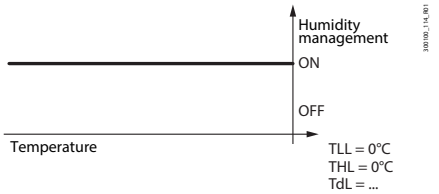


Fig. 7.aj

**Case 2: Humidity control within a set range**
Priority is given to temperature control: humidity is controlled in a series of cycles, while always keeping the temperature in the range TLL-THL.

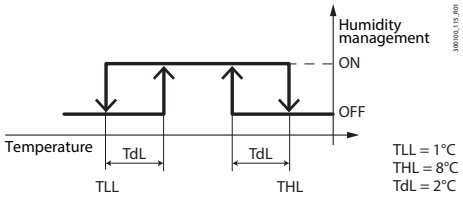


Fig. 7.ak

**Case 3: Humidity control with high temperature limit**
This configuration prevents the temperature from exceeding the limit (THL) during dehumidification, for example if the heater is oversized.

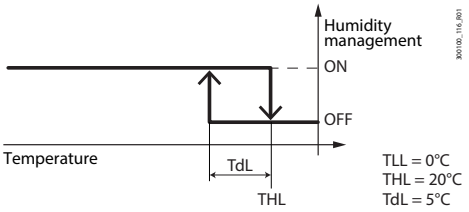


Fig. 7.al

**Case 4: Humidity control with low temperature limit**
This configuration allows humidification to be stopped below the threshold TLL threshold to avoid excessive cooling and lowering the temperature, for example if the heater is undersized.

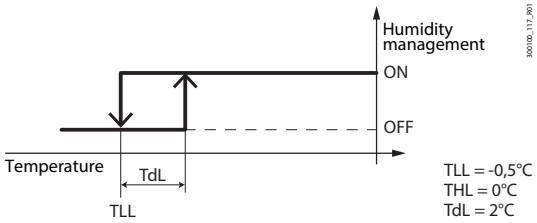


Fig. 7.am

## 7.15.7 Humidity probe error

In the event of a humidity probe error, humidification and dehumidification are managed in duty cycles. This is only possible for humidification alone and dehumidification alone; with dead band control, both outputs remain off.

| Par. | Description | Def | Min | Max | UOM | User | User terminal |
|---|---|---|---|---|---|---|---|
| uof | OFF time for humidity duty setting operation | 60 | c2 | 120 | min | S | NO |
| uon | ON time for humidity duty setting operation | 10 | c3 | 120 | min | S | NO |

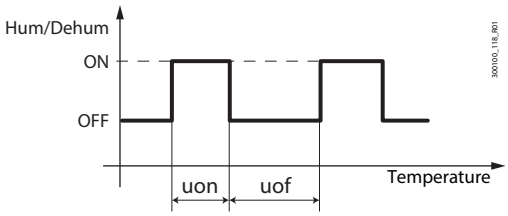


Fig. 7.an

| Ref | Description |
|---|---|
| Hum | Humidification outlet |
| Dehum | Dehumidification output |

## 7.16 Light management

The light can be controlled by several sources: button, supervisor, door switch, curtain switch and time band.
The light is switched on or off based on an event:

| Light | Action |
|---|---|
| Button | Pressing the button |
| Supervisor | Variation of the value from the supervisor (parameter Lht) |
| Door switch | Contact transition (opening/closing) |
| Curtain switch | Contact transition (opening/closing) |
| Time band | based on the on/off day, hours, minutes |

Tab. 7.l

When the digital inputs are stable (door switch or curtain switch), the light can be switched on and off from the keypad or supervisor.

| Par. | Description | Def | Min | Max | UOM | User | User terminal |
|---|---|---|---|---|---|---|---|
| DOE | Assign light digital output - see DOA | ... | 0 | 6 | - | S | NO |
| rOE | Light digital output logic - see rOA | 0 | 0 | 1 | - | S | NO |

## 7.17 Door management

iJW can manage the opening of the door with or without stopping temperature control, based on the setting of the door switch.

| Par. | Description | Def | Min | Max | UOM | User | User terminal |
|---|---|---|---|---|---|---|---|
| DIE | Assign door switch with compressor OFF digital input see DIA | ... | 0 | 4 | - | S | NO |
| DIP | Assign door switch without compressor OFF digital input - see DIA | ... | 0 | 4 | - | S | NO |
| rIE | Door switch with compressor OFF digital input logic - see rIA | 0 | 0 | 1 | - | S | NO |
| rIP | Door switch without compressor OFF digital input logic - see rIA | 0 | 0 | 1 | - | S | NO |

If the digital input is configured as a door switch with compressor off (parameter DIE), when the door is opened both the compressor and the evaporator fans are stopped; on the other hand, if configured as a door switch without compressor off (parameter DIP), when the door is opened only the evaporator fans are stopped.

| Par. | Description | Def | Min | Max | UOM | User | User terminal |
|---|---|---|---|---|---|---|---|
| H14 | Time light stays on after closing the door | 0 | 0 | 240 | min | U | NO |
| Ad | Delay time for high and low temperature alarms (AH, AL) | 120 | 0 | 240 | min | U | YES |
| Add | Open door alarm delay and high temperature alarm bypass time for open door | 5 | 1 | 240 | min | U | YES |

When the door is open, the high temperature alarm is ignored for the time set using parameter Add, to avoid false alarms, and the service icon flashes to signal a warning condition. When time Add has elapsed, the following occur:
- the open door alarm (dor) is signalled;
- compressor and evaporator fan control resumes;
- the light stays on;
- after the delay time set by parameter Ad, the high temperature alarm is activated.

When closing the door:
- control resumes, restarting the compressor and evaporator fans if required;
- the light switches off after the time set by parameter H14 and the high temperature alarm is activated after the delay Ad.

When control resumes, the compressor safety times c1 and c2 are observed.

## 7.18 Door - light interactions

In the absence of time bands, opening the door always activates normal operating mode, which lasts until a different mode is selected via keypad or BMS. The light switches on when the door is opened and switches off when it closes, with a delay equal to H14, if set.

If time bands are set to define eco/normal mode, the light will follow these rules by switching on in normal mode and off in eco mode. Opening the door will switch back to normal mode and switch on the light.

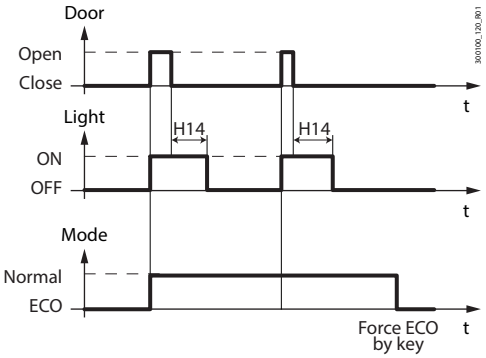


Fig. 7.ao

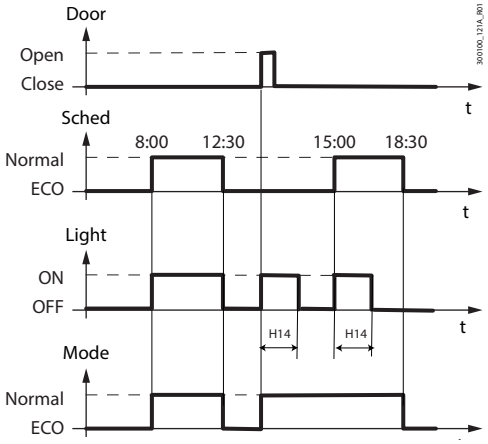


Fig. 7.ap

| Par. | Description | Def | Min | Max | UOM | User | User terminal |
|---|---|---|---|---|---|---|---|
| H8 | Output switched with time bands:<br>0 = Light; 1 = AUX | 0 | 0 | 1 | - | S | NO |

The time bands can be associated with the AUX output rather than the light, by setting parameter H8. In this case, the light will reflect the position of the door, switching on and off respectively when the door is opened and closed.

## 7.19 Curtain management

| Par. | Description | Def | Min | Max | UOM | User | User terminal |
|---|---|---|---|---|---|---|---|
| DIG | Assign curtain switch digital input - see DIA | ... | 0 | 4 | - | S | NO |
| rIG | Curtain switch digital input logic - see rIA | 0 | 0 | 1 | - | S | NO |

If the digital input is associated with the curtain switch, when the curtain is closed the IJx controller activates eco mode and the set point is modified by adding the value of parameter r4. When the curtain is open, the light is always switched on.

**Notice:** in eco mode, the value St+r4 is used for all of the functions that involve the set point (e.g. relative high and low temperature alarms, control with dead band, two-stage compressor control, etc.).

## 7.20 Generic functions

iJW can exploit unused inputs and outputs to configure a "generic function". Each generic function can be enabled/disabled in the Applica app or Applica Desktop configuration software.

**Caution**: the generic functions available vary according to the model of controller.

The following can be activated (maximum configuration):
- 1 generic function with On/Off output;
- 1 generic alarm function (signal only).

The generic function can be controlled based on one of the following:
- 1 specific probe;
- difference between 2 suitably configured probes.

**Caution**: the controller cannot verify the consistency of the settings, if two analogue functions are mistakenly assigned to the same analogue inputs or the same digital output.

## 7.20.1 Enabling

The generic function can be enabled always, or when the unit is in a certain status.

| Par. | Description | Def | Min | Max | UOM | User | User terminal |
|---|---|---|---|---|---|---|---|
| GFA_E | Generic alarm function: enable<br>0 Always<br>1 Unit ON<br>2 Unit OFF<br>3 Defrost<br>4 Not used<br>5 Continuous cycle<br>6 Duty setting<br>7 Standby<br>8 Compressor or reverse output active<br>9 Door open<br>10 Alarm active | 0 | 0 | 10 | - | S | NO |
| GFS_E | Generic On/Off function, enable - see GFA_E | 0 | 0 | 10 | - | S | NO |

### Assign control probe

Select the control probes for the generic function.

| Par. | Description | Def | Min | Max | UOM | User | User terminal |
|---|---|---|---|---|---|---|---|
| GFA_1 | Generic alarm function, control probe 1<br>0 Not configured<br>1 Outlet temperature (Sm)<br>2 Defrost temperature (Sd)<br>3 Intake temperature (Sr)<br>4 Not used<br>5 Not used<br>6 auxiliary evaporator defrost temperature (Sd2)<br>7 Auxiliary probe 1<br>8 Auxiliary probe 2<br>9 Room temperature<br>10 Not used<br>11 Glass temperature<br>12 Not used<br>13 Condensing temperature<br>14 Humidity<br>15 Frost protection temperature<br>16 Product temperature<br>17 Not used<br>18 Power present<br>19 Evaporator fan request<br>20 Control probe | 0 | 0 | 20 | - | S | NO |
| GFA_2 | Generic alarm function, control probe 2 - see GFA_1 | 0 | 0 | 20 | - | S | NO |
| GFS_1 | Generic On/Off function: control probe 1 - see GFA_1 | 0 | 0 | 20 | - | S | NO |
| GFS_2 | Generic On/Off function: control probe 2 - see GFA_1 | 0 | 0 | 20 | - | S | NO |

## 7.20.2 On/Off output

Assign the digital output for the generic function, the type (direct/reverse) and the activation logic (see parameter rOA).

| Par. | Description | Def | Min | Max | UOM | User | User terminal |
|---|---|---|---|---|---|---|---|
| DOS | Assign generic On/Off function digital output - see DOA | ... | 0 | 6 | - | S | NO |
| rOS | Generic On/Off function digital output logic - see rOA | 0 | 0 | 1 | - | S | NO |
| GFS_D | Generic On/Off function, differential | 0 | 0 | 99.9 | - | S | NO |
| GFS_S | Generic On/Off function: set point | 0 | -99 | 999 | - | S | NO |
| GFS_T | Generic On/Off function: type 0 = Direct, 1 = Reverse | 0 | 0 | 1 | - | S | NO |

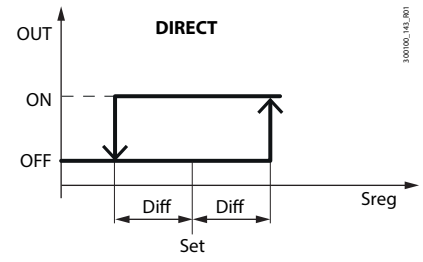


Fig. 7.aq

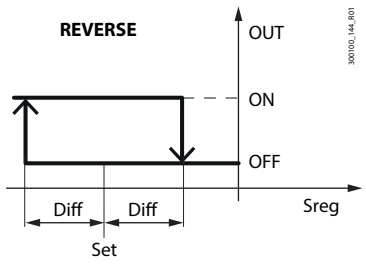


Fig. 7.ar

| Ref. | Description |
|---|---|
| Set | Set point (GFS_S) |
| Diff | Differential (GFS_D) |
| Sreg | Control probe 1<br>*or*<br>Control probe1 - Control probe 2 |
| OUT | Digital output |

## 7.20.3 Alarm signal

The alarm can be signalled for two reasons:

1. switching of the digital input, assigned by parameter DIS: the display shows "GHI"
2. if the difference between the values of the control probes exceeds the high or low threshold for a time longer than GFA_De: the display shows GHI or GLO respectively.

**Notice:** check that the alarm is generated by only one of the two causes.

| Par. | Description | Def | Min | Max | UOM | User | User terminal |
|---|---|---|---|---|---|---|---|
| GFA_D | Generic alarm function: differential | 0 | 0 | 99.9 | - | S | NO |
| GFA_De | Generic alarm function: delay | 0 | 0 | 30000 | s | S | NO |
| GFA_Ht | Generic alarm function: high temperature threshold | 0 | GFA_Lth | 999 | - | S | NO |
| GFA_Lth | Generic alarm function: low temperature threshold | 0 | -99 | GFA_Ht | - | S | NO |

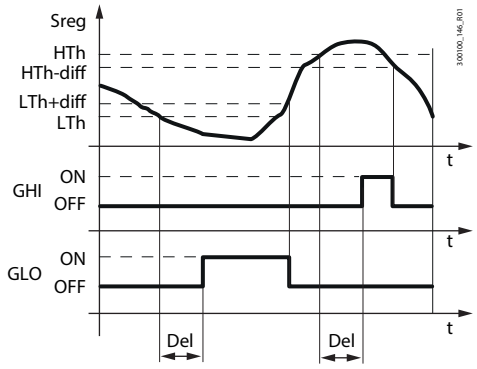


Fig. 7.as

| Ref. | Description |
|---|---|
| Lth | Low temperature threshold (GFA_Lth) |
| HTh | High temperature threshold (GFA_Hth) |
| diff | Differential (GFA_D) |
| Del | Delay (GFA_De) |
| Sreg | Control probe 1<br>*or*<br>Control probe1 - Control probe 2 |
| t | Time |
| GHI | High temperature alarm message |
| GLO | Low temperature alarm message |

## 7.21 Anti-sweat heater or fan

The anti-sweat function on iJW has fixed activation (not based on a glass temperature probe reading) and can control a heater or fan, with the purpose of demisting the showcase glass using the activation and deactivation times set for parameters rHU and rHt.

| Par. | Description | Def | Min | Max | UOM | User | User terminal |
|---|---|---|---|---|---|---|---|
| DOQ | Assign anti-sweat heater digital output - see DOA | ... | 0 | 6 | - | S | NO |
| rOq | Anti-sweat heater digital output logic - see rOA | 0 | 0 | 1 | - | S | NO |
| rHt | Manual anti-sweat heater activation period (0 = function disabled) | 5 | 0 | 180 | min | S | NO |
| rHU | Manual anti-sweat heater activation percentage (of period 'rHt')<br>(0 = function disabled) | 70 | 0 | 100 | % | S | NO |

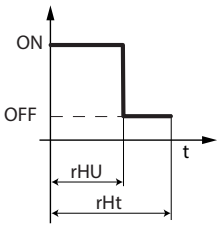


Fig. 7.at

| Ref. | Description |
|---|---|
| A | Relay output |
| rHU | Anti-sweat heater/fan activation percentage |
| rHt | Anti-sweat heater/fan activation time |
| t | time |

If either or both of the parameters rHu or rHt is set to zero, the function is disabled.

## 7.22 Gasket heater

The function activates gasket heating cycles to make it easier to open the door when the control temperature is very low.

| Par. | Description | Def | Min | Max | UOM | User | User terminal |
|---|---|---|---|---|---|---|---|
| DOx | Assign gasket heater digital output - see DOA | ... | 0 | 6 | - | S | NO |
| rOx | Gasket heater digital output logic - see rOA | 0 | 0 | 1 | - | S | NO |
| OfT | Gasket heater OFF time | 3 | 0 | 250 | min | S | NO |
| OnT | Gasket heater ON time | 5 | 0 | 250 | min | S | NO |
| Rdrh | Gasket heater control differential | 2 /3.6 | 0.1/0.2 | 20 / 36 | Δ °C/°F | S | NO |
| Strh | Gasket heater control set point | -18/-0.4 | -50/-58 | 200/ 392 | °C/°F | S | NO |

When the control temperature reaches the set point Strh, the output is enabled and will start being activated cyclically based on the times set for parameters OnT and OfT.

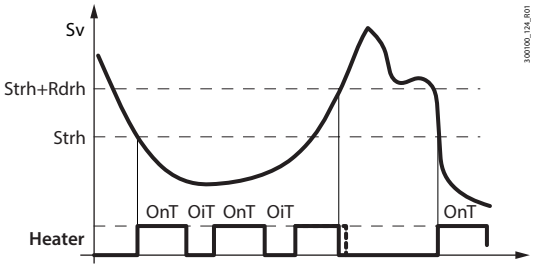


Fig. 7.au

The output is deactivated when the temperature rises above Strh+Rdrh.

## 7.23 Condensate drain pan heater

This function heats the condensate drained during defrosting to prevent the drain line from freezing.

| Par. | Description | Def | Min | Max | UOM | User | User terminal |
|---|---|---|---|---|---|---|---|
| DOP | Assign drain heater digital output - see DOA | ... | 0 | 6 | - | S | NO |
| rOP | Drain heater digital output logic - see rOA | 0 | 0 | 1 | - | S | NO |
| dHA | Condensate drain heater activation time before defrosting | 3 | 0 | 120 | min | S | NO |
| dHE | Condensate drain heater activation time after defrost | 3 | 1 | 120 | min | S | NO |

If condensate drain heating is configured, the output is activated for the time set by parameter dHA before defrosting, and remains active for a time set by parameter dHE after defrosting.

## 7.24 Anti-heating

This function keeps the light and AUX outputs deactivated until the control temperature falls below St+Hdh when the following conditions occur:

- controller powered on;
- switching from Off to On;
- after resetting alarms HI, IA, dA, CHt, rE.

| Par. | Description | Def | Min | Max | UOM | User | User terminal |
|---|---|---|---|---|---|---|---|
| Hdh | Delta for anti-heating function | 0 | 0 | 200/360 | Δ °C/°F | S | NO |
| St | Temperature control set point | 50/122 | r1 | r2 | °C/°F | U | YES |

## 7.25 High and low voltage protection (HLVP)

The high and low power voltage protection (HLVP) feature is disabled by default. Carefully read the following instructions carefully for correct setup. Some iJW models feature protection against high and low power supply voltages, allowing the compressor to operate only at voltages within the operating limits. This function stops the compressor if the mains voltage is outside of a range specified by parameters uHo and uLo. The compressor is switched off after a delay that can be set by parameter ucd. The compressor starts again when the voltage returns within the limits set by parameters uHI and uLI.

| Par. | Description | Def | Min | Max | UOM | User | User terminal |
|---|---|---|---|---|---|---|---|
| c1 | Min time between consecutive compressor starts | 0 | 0 | 15 | min | S | NO |
| c2 | Min compressor OFF time | 0 | 0 | 15 | min | S | NO |
| c3 | Min compressor ON time | 0 | 0 | 15 | min | S | NO |
| ucd | Compressor stop delay after HLVP protection activated | 5 | 0 | 60 | s | S | NO |
| udE | Enable display of HLVP protection alarms (EHI and ELO, see alarm table) | 0 | 0 | 1 | - | S | NO |
| uHi | High voltage protection start threshold | 245 | 0 | 350 | V | S | NO |
| uHo | High voltage protection end threshold | 255 | 0 | 350 | V | S | NO |
| uEn | Enable HLVP protection: 0 = disabled; 1 = enabled | 0 | 0 | 1 | - | S | NO |
| uLi | Low voltage protection start threshold | 205 | 0 | 350 | V | S | NO |
| uLo | Low voltage protection end threshold | 195 | 0 | 350 | V | S | NO |

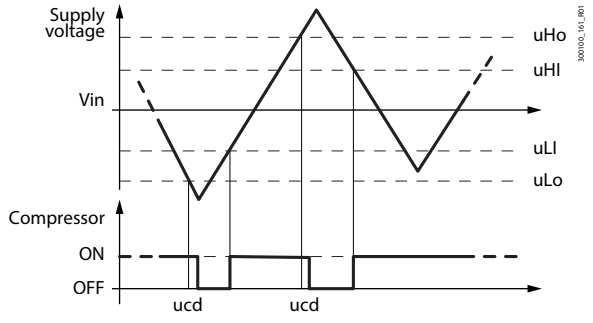


Fig. 7.av

**Notice:** the compressor protection times c1 and c3 are ignored when the high or low voltage conditions occur, while c2 is always observed.

**Caution**:

- this function cannot be considered a compressor safety function;
- operation of the controller outside of the rated operating voltage range described in the technical specifications is the customer's responsibility.

## 7.26 Zero crossing

The zero crossing feature is disabled by default. Carefully read the following instructions carefully for correct setup. The iJW controller allows the relay to switch at the power supply voltage zero crossing. The feature can be activated on each relay.

| Par. | Description | Def | Min | Max | UOM | User | User terminal |
|---|---|---|---|---|---|---|---|
| DOT1 | Enable zero crossing on digital output 1 (NO1)<br>0 = Zero crossing not enabled;<br>1,2 = Reserved use;<br>3 = Zero crossing enabled. | 0 | 0 | 3 | - | S | NO |
| DOT2 | Enable zero crossing on digital output 2 (NO2)<br>0 = Zero crossing not enabled;<br>1,2 = Reserved use;<br>3 = Zero crossing enabled. | 0 | 0 | 3 | - | S | NO |
| DOT3 | Enable zero crossing on digital output 3 (NO3)<br>0 = Zero crossing not enabled;<br>1,2 = Reserved use;<br>3 = Zero crossing enabled. | 0 | 0 | 3 | - | S | NO |
| DOT4 | Enable zero crossing on digital output 4 (NO4)<br>0 = Zero crossing not enabled;<br>1,2 = Reserved use;<br>3 = Zero crossing enabled. | 0 | 0 | 3 | - | S | NO |
| DOT5 | Enable zero crossing on digital output 5 (NO5)<br>0 = Zero crossing not enabled;<br>1,2 = Reserved use;<br>3 = Zero crossing enabled. | 0 | 0 | 3 | - | S | NO |
| DOT6 | Enable zero crossing on digital output 6 (NO6)<br>0 = Zero crossing not enabled;<br>1,2 = Reserved use;<br>3 = Zero crossing enabled. | 0 | 0 | 3 | - | S | NO |

**Caution**:
- the load must be directly connected to the relay: before enabling zero crossing, check that there is no external relay;
- The load must be powered by the same phase as the controller.

# 8. PARAMETER TABLE

Below is the table of the parameters that can be displayed on the terminal or can be modified using the Applica Desktop configuration software or Applica app. In the Applica app and in the Applica Desktop configuration software for iJW, the access level to the Service (S) parameters is preconfigured with default password 22.

| Par. | Description | Def | Min | Max | UOM | User | User terminal |
|---|---|---|---|---|---|---|---|
| PDS | Service password | 22 | 0 | 999 | - | S | NO |
| PDU | User password | 0 | 0 | 999 | - | U | NO |

**Notice:**
- the read-only parameters are not visible from the Applica app using NFC, as NFC memory cannot be overwritten frequently;
- to avoid any fraudulent activities, the default password values should be changed at the end of the commissioning procedure. For example, with the Applica app, parameters PDS and PDU can be used to set the new password, with a maximum length of 3 numbers.

**Caution**: the operation to reset the default values is not reversible, unless a user recipe has been previously saved for loading using the Applica Desktop configuration software/Applica app, see the paragraph on the configurations.

## 8.1 Parameter table

| Code | Description | Def. | Min | Max | UOM | User | User term. |
|---|---|---|---|---|---|---|---|
| /2 | Analogue probe measurement stability:<br>0 = probe reading not delayed;<br>…<br>9 = maximum probe reading delay. | 5 | 0 | 9 | - | S | NO |
| /3 | Display probe value:<br>0 = disabled;<br>1 = fast update;<br>...<br>15 = slow update. | 0 | 0 | 15 | - | S | NO |
| /4 | Virtual probe composition:<br>0 = Air off probe Sm; 100 = Air on probe Sr | 0 | 0 | 100 | % | S | NO |
| /5 | Unit of measure: 0 = °C; 1 = °F. | 0 | 0 | 1 | - | U | YES |
| /6 | Display decimal point: 0 = Yes; 1 = No. | 0 | 0 | 1 | - | S | YES |
| /cA | Outlet temperature probe (Sm) calibration | 0 | -20/ -36 | 20/ 36 | Δ °C/°F | S | NO |
| /cb | Defrost temperature probe (Sd) calibration | 0 | -20/ -36 | 20/ 36 | Δ °C/°F | S | NO |
| /cc | Intake temperature probe (Sr) calibration | 0 | -20/ -36 | 20/ 36 | Δ °C/°F | S | NO |
| /cF | Auxiliary evaporator defrost temperature probe (Sd2) calibration | 0 | -20/ -36 | 20/ 36 | Δ °C/°F | S | NO |

| Code | Description | Def. | Min | Max | UOM | User | User term. |
|---|---|---|---|---|---|---|---|
| /cG | Auxiliary temperature probe 1 calibration | 0 | -20/ -36 | 20/ 36 | Δ °C/°F | S | NO |
| /cH | Auxiliary temperature probe 2 calibration | 0 | -20/ -36 | 20/ 36 | Δ °C/°F | S | NO |
| /cI | Room temperature probe calibration | 0 | -20/ -36 | 20/ 36 | Δ °C/°F | S | NO |
| /cM | Glass temperature probe calibration | 0 | -20/ -36 | 20/ 36 | Δ °C/°F | S | NO |
| /co | Condensing temperature probe calibration | 0 | -20/ -36 | 20/ 36 | Δ °C/°F | S | NO |
| /cp | Humidity probe calibration | 0 | -20 | 20 | Δ %rh | S | NO |
| /cq | Frost protection temperature probe calibration | 0 | -20/ -36 | 20/ 36 | Δ °C/°F | S | NO |
| /cr | Product temperature probe calibration | 0 | -20/ -36 | 20/ 36 | Δ °C/°F | S | NO |
| /d1 | Assign end defrost probe:<br>1 = outlet temperature (Sm);<br>2 = defrost temperature (Sd);<br>3 = intake temperature (Sr);<br>4 = not used;<br>5 = not used;<br>6 = auxiliary evaporator defrost temperature (Sd2);<br>7 = auxiliary probe 1;<br>8 = auxiliary probe 2;<br>9 = ambient temperature;<br>10 = not used;<br>11 = glass temperature;<br>12 = not used;<br>13 = condensing temperature;<br>14 = humidity;<br>15 = frost protection temperature;<br>16 = product temperature | 2 | 1 | 16 | - | S | NO |
| /d2 | Assign auxiliary evaporator end defrost probe - see /d1 | 6 | 1 | 16 | - | S | NO |
| /FA | Assign outlet temperature probe (Sm)<br>0 = Function disabled; 4 = Probe S4<br>1 = Probe S1; 5 = Reserved<br>2 = Probe S2; 6 = Not available<br>3 = Probe S3; 7 = Not available | (**) | 0 | 7 | - | S | NO |
| /Fb | Assign defrost temperature probe (Sd) - see /FA | (**) | 0 | 7 | - | S | NO |
| /Fc | Assign intake temperature probe (Sr) - see /FA | (**) | 0 | 7 | - | S | NO |
| /FF | Assign auxiliary evaporator defrost temperature probe (Sd2) - see /FA | (**) | 0 | 7 | - | S | NO |
| /FG | Assign auxiliary temperature probe 1 (Saux1) - see /FA | (**) | 0 | 7 | - | S | NO |
| /FH | Assign auxiliary temperature probe 2 (Saux1) - see /FA | (**) | 0 | 7 | - | S | NO |
| /FI | Assign ambient temperature probe (SA) - see /FA | (**) | 0 | 7 | - | S | NO |
| /FM | Assign glass temperature probe (Svt) - see /FA | (**) | 0 | 7 | - | S | NO |
| /Fo | Assign condensing temperature probe - see /FA | (**) | 0 | 7 | - | S | NO |
| /FP | Assign humidity probe (fixed on S5) | (**) | 0 | 5 | - | S | NO |
| /Fq | Assign frost protection temperature probe - see /FA | (**) | 0 | 7 | - | S | NO |
| /FR | Assign product temperature probe - see /FA | (**) | 0 | 7 | - | S | NO |
| /Lb | Status LEDs on in standby (including ON/OFF):<br>0 = off; 1 = on. | 0 | 0 | 1 | - | S | NO |
| /nE | Enable user terminal navigation:<br>0 = enabled; 1 = disabled; 2 = On/Off disabled;<br>3 = On/Off and access to set point disabled. | 0 | 0 | 3 | - | S | NO |
| /P1 | Configuration of probes S1, S2, S3, S4, B5<br>0 = PT1000; 1 = PTC; 2 = NTC; 3 = NTC-LT; 4 = NTC-HT. | 2 | 0 | 4 | - | S | NO |
| /P2 | Configuration of multifunction input S3/ DI1:<br>0, 1, 2, 3, 4 = S3; 5 = DI1. | 5 | 0 | 5 | - | S | NO |
| /Sb | PRG button always ON in standby: 0 = off; 1 = on. | 1 | 0 | 1 | - | S | NO |
| /ta | Alternating (temperature/humidity):<br>0 = disabled; 1 = enabled. | 0 | 0 | 1 | - | S | NO |
| /t1 | Display on user terminal:<br>0 = Not configured; 6 to 8 = not available<br>1 = value of S1; 9 = control probe<br>2 = value of S2; 10 = virtual probe<br>3 = value of S3; 11 to 14 = not available<br>4 = value of S4; 15 = actual control set point<br>5 = value of S5 | 9 | 0 | 15 | - | S | YES |
| A0 | High and low temperature alarm reset differential | 2/ 3.6 | 0.1/0.2 | 20/ 36 | Δ °C/°F | S | NO |
| A1 | Alarm thresholds (AL, AH) relative to the set point St or absolute:<br>0 = relative; 1 = absolute. | 0 | 0 | 1 | - | S | NO |
| A3 | Defrost terminated after maximum time signal:<br>0 = disabled; 1 = enabled. | 0 | 0 | 1 | - | S | NO |
| A5 (wizard only) | Digital input (DI2) configuration:<br>0 = Not configured; 4 = NC door switch<br>1 = NO external alarm; 5 = NO remote ON/OFF<br>2 = NC external alarm; 6 = NC remote ON/OFF<br>3 = NO door switch | 0 | 0 | 6 | - | U | YES |
| A6 | Stop compressor with external alarm (Toff = 15 minutes, fixed):<br>0 = compressor always OFF; 100 = compressor always ON. | 0 | 0 | 100 | min | S | NO |
| A7 | Delay time for delayed external alarm<br>(0 = signal-only alarm) | 0 | 0 | 240 | min | S | NO |
| Ac | Dirty condenser alarm threshold | 70/158 | 0/ 32 | 250/482 | °C/°F | S | NO |
| Acd | Dirty condenser alarm delay time | 0 | 0 | 240 | min | S | NO |
| Ad | Delay time for high and low temperature alarms (AH, AL) | 120 | 0 | 240 | min | U | YES |
| Add | High temperature alarm bypass time for door open | 5 | 1 | 240 | min | U | YES |
| AE | Dirty condenser alarm reset differential | 5 | 0.1/0.2 | 20/ 36 | Δ °C/°F | S | NO |
| AF | Frost protection alarm threshold | -5/ -9 | -50/ -58 | 200/392 | °C/°F | S | NO |
| AFd | Frost protection alarm delay time | 1 | 0 | 15 | min | S | NO |
| AH | Relative high temperature alarm threshold | 0 | 0 | 555/999 | Δ °C/°F | U | YES |
| AHA | Absolute high temperature alarm threshold | 537/999 | -100/ -148 | 537/999 | °C/°F | U | YES |
| AL | Relative low temperature alarm threshold | 0 | 0 | 200/360 | Δ °C/°F | U | YES |
| ALA | Absolute low temperature alarm threshold | -100/-148 | -100/ -148 | 537/999 | °C/°F | U | YES |
| AuC | Activate auxiliary output | 0 | 0 | 1 | - | S | NO |
| BtE | Enable Bluetooth™ connection: 0 = disabled; 1 = enabled. | 1 | 0 | 1 | - | S | NO |
| c0 | Delay to enable compressor and evaporator fan at power on | 0 | 0 | 15 | min | S | NO |
| c1 | Min time between consecutive compressor starts | 0 | 0 | 15 | min | S | NO |
| c10 | End pump down: 0 = time; 1 = pressure. | 0 | 0 | 1 | - | S | NO |

| Code | Description | Def. | Min | Max | UOM | User | User term. |
|---|---|---|---|---|---|---|---|
| c11 | Second compressor start delay | 4 | 0 | 250 | s | S | NO |
| c2 | Min compressor OFF time | 3 | 0 | 15 | min | S | NO |
| c3 | Min compressor ON time | 0 | 0 | 15 | min | S | NO |
| c4 | ON time for duty setting operation (Toff = 15 minutes, fixed value):<br>0 = compressor always OFF;<br>100 = compressor/valve always ON | 0 | 0 | 100 | min | S | NO |
| c7 | Defrost priority over continuous cycle:<br>0 = continuous cycle has priority; 1 = defrost has priority. | 0 | 0 | 1 | - | S | NO |
| c8 | Compressor start delay after opening the pump down valve | 5 | 0 | 60 | s | S | NO |
| c9 | Restart during pump down: 0 = disabled; 1 = enabled | 0 | 0 | 1 | - | S | NO |
| cc | Continuous cycle running time (0 = disabled) | 0 | 0 | 72 | hours | S | NO |
| ccE | Set point delta to end continuous cycle | 1.5/ 2.7 | 0.0/ 0.0 | 9.9/ 17.8 | Δ °C/°F | S | NO |
| CnC | Start continuous cycle | 0 | 0 | 1 | - | S | NO |
| cPt | Maximum pump down time (0 = pump down disabled) | 0 | 0 | 900 | s | S | NO |
| d0 | Type of defrost: 0 = heater by temperature;<br>1 = hot gas by temperature;<br>2 = heater by time;<br>3 = hot gas by time;<br>4 = heater by time with temperature control. | 0 | 0 | 4 | - | S | NO |
| d10 | Compressor OFF time running time defrost - 0 = function disabled | 0 | 0 | 240 | min | S | NO |
| d11 | Defrost temperature threshold in running time mode | -50/ -58 | -50/ -58 | 50/ 122 | °C/°F | S | NO |
| d15 | Start defrost threshold | 0 | 0 | 240 | min | S | NO |
| d16 | Time with no temperature decrease before starting defrost | 30 | Add | 240 | min | S | NO |
| d20 | Sampling time for alarm rSF | 0 | 0 | 240 | min | S | NO |
| d21 | Number of defrosts allowed before signalling alarm rSF | 2 | 1 | 5 | - | S | NO |
| d22 | Temperature difference to verify decrease | 0.1/ 0.2 | 0.1/ 0.2 | 0.5/ 0.9 | Δ °C/°F | S | NO |
| d4 | Enable defrost at power on: 0 = disabled; 1 = enabled. | 0 | 0 | 1 | - | S | NO |
| d5 | Defrost delay at start-up or after command from digital input | 0 | 0 | 240 | min | S | NO |
| d6 | Display on terminals during defrost: 0 = temperature alternating with 'dEF'; 1 = freeze display; 2 = 'dEF'. | 1 | 0 | 2 | - | S | YES |
| d7 | Skip defrost: 0 = disabled; 1 = enabled. | 0 | 0 | 1 | - | S | NO |
| d8 | Bypass high temperature alarm time after defrost | 1 | 1 | 240 | hours | S | YES |
| d9 | Defrost priority over compressor protection times:<br>0 = the compressor protection times are observed;<br>1 = the compressor protection times are ignored, therefore defrosting starts without waiting for the compressor protection times to elapse | 0 | 0 | 1 | - | S | NO |
| dAS | Activate ECO mode | 0 | 0 | 1 | - | U | NO |
| dC | Time base for defrosts: 0 = dI in hours, dP1 and dP2 in minutes;<br>1 = dI in minutes, dP1 and dP2 in seconds. | 0 | 0 | 1 | - | S | NO |
| dC1 | Time base for d8: 0 = d8 in hours; 1 = d8 in minutes | 0 | 0 | 1 | - | S | NO |
| dCH | Defrost after opening the door: maximum number of openings | 50 | dcL | 99 | - | S | NO |
| dcL | Defrost after opening the door: minimum number of openings | 0 | 0 | dCH | - | S | NO |
| dd | Dripping time after defrost (0 = no dripping) | 2 | 0 | 15 | min | S | NO |
| dfM | Start defrost | 0 | 0 | 1 | - | U | NO |
| dHA | Condensate drain heater activation time before defrosting | 3 | 1 | 120 | min | S | NO |
| dHE | Condensate drain heater activation time after defrosting | 3 | 1 | 120 | min | S | NO |
| dHG | Waiting time for compressor start to reverse cycle | 0 | 0 | 300 | s | S | NO |
| dI | Maximum interval between consecutive defrosts | 8 | 0 | 240 | hours | S | YES |
| DIA | Assign immediate external alarm digital input:<br>0 = Disabled; 1 = DI1; 2 = DI2; 3, 4 = Not available | (**) | 0 | 4 | - | S | NO |
| DIb | Assign delayed external alarm digital input - see DIA | (**) | 0 | 4 | - | S | NO |
| DIc | Assign enable defrost digital input - see DIA | (**) | 0 | 4 | - | S | NO |
| DId | Assign start defrost digital input - see DIA | (**) | 0 | 4 | - | S | NO |
| DIE | Assign door switch with compressor OFF digital input - see DIA | (**) | 0 | 4 | - | S | NO |
| DIF | Assign remote ON/OFF digital input - see DIA | (**) | 0 | 4 | - | S | NO |
| DIG | Assign curtain switch digital input - see DIA | (**) | 0 | 4 | - | S | NO |
| DIH | Assign start/stop continuous cycle digital input - see DIA | (**) | 0 | 4 | - | S | NO |
| DIP | Assign door switch without compressor OFF digital input - see DIA | (**) | 0 | 4 | - | S | NO |
| DIS | Assign generic function alarm digital input logic - see DIA | (**) | 0 | 4 | - | S | NO |
| DIt | Assign low pressure switch digital input - see DIA | (**) | 0 | 4 | - | S | NO |
| DIU | Assign AUX output activation digital input - see DIA | (**) | 0 | 4 | - | S | NO |
| dn | Nominal defrost duration for skip defrost | 75 | 0 | 100 | % | S | NO |
| DOA | Assign solenoid/compressor digital output<br>0 = not configured<br>1 = digital output 1 (NO1)<br>2 = digital output 2 (NO2)<br>3 = digital output 3 (NO3)<br>4 = digital output 4 (NO4)<br>5 = digital output 5 (NO5)<br>6 = digital output 6 (NO6) | (**) | 0 | 6 | - | S | NO |
| DOb | Assign alarm digital output - see DOA | (**) | 0 | 6 | - | S | NO |
| DOC | Assign AUX auxiliary digital output - see DOA | (**) | 0 | 6 | - | S | NO |
| DOE | Assign light digital output - see DOA | (**) | 0 | 6 | - | S | NO |
| DOG | Assign defrost digital output - see DOA | (**) | 0 | 6 | - | S | NO |
| DOH | Assign auxiliary evaporator defrost digital output - see DOA | (**) | 0 | 6 | - | S | NO |
| DOI | Assign evaporator fan digital output - see DOA | (**) | 0 | 6 | - | S | NO |
| DOj | Assign dehumidification heater digital output - see DOA | (**) | 0 | 6 | - | S | NO |
| DOk | Assign auxiliary compressor without rotation digital output - see DOA | (**) | 0 | 6 | - | S | NO |
| DOn | Assign pump down valve digital output - see DOA | (**) | 0 | 6 | - | S | NO |
| DOP | Assign condensate drain heater digital output - see DOA | (**) | 0 | 6 | - | S | NO |
| DOQ | Assign anti-sweat heater digital output - see DOA | (**) | 0 | 6 | - | S | NO |
| DOS | Assign generic On/Off function digital output - see DOA | (**) | 0 | 6 | - | S | NO |
| DOt | Assign condenser fan digital output - see DOA | (**) | 0 | 6 | - | S | NO |
| DOu | Assign humidification digital output - see DOA | (**) | 0 | 6 | - | S | NO |
| DOv | Assign reverse digital output with dead band control - see DOA | (**) | 0 | 6 | - | S | NO |
| DOw | Assign auxiliary parallel compressor digital output - see DOA | (**) | 0 | 6 | - | S | NO |
| DOx | Assign gasket heater digital output - see DOA | (**) | 0 | 6 | - | S | NO |
| DOy | Assign auxiliary compressor with rotation digital output - see DOA | (**) | 0 | 6 | - | S | NO |
| DOz | Assign external dehumidifier digital output - see DOA | (**) | 0 | 6 | - | S | NO |

| Code | Description | Def. | Min | Max | UOM | User | User term. |
|---|---|---|---|---|---|---|---|
| dP1 | Maximum defrost duration | 45 | 1 | 240 | min | S | YES |
| dP2 | Max auxiliary evaporator defrost duration | 45 | 1 | 240 | min | S | YES |
| dPH | Defrost after opening the door: maximum defrost duration | 15 | dPL | dP1 | min | S | NO |
| dPL | Defrost after opening the door: minimum defrost duration | 5 | 0 | dPH | min | S | NO |
| dS1 | Compressor off time in sequential stop defrost mode (0 = function disabled) | 0 | 0 | 45 | min | S | NO |
| dS2 | Compressor operating time in sequential stop defrost mode | 120 | 0 | 240 | min | S | NO |
| dt1 | End defrost temperature (read by Sd) | 4/39.2 | -50/ -58 | 50/ 122 | °C/°F | S | YES |
| dt2 | Auxiliary evaporator end defrost temperature (read by Sd2) | 4/39.2 | -50/ -58 | 50/ 122 | °C/°F | S | YES |
| F0 | Evaporator fan management:<br>0 = always on;<br>1 = activation based on Sd – Sv;<br>2 = activation based on Sd; 3 = activation based on Sv. | 0 | 0 | 3 | - | S | NO |
| F00 | Condenser fan management:<br>0 = always on with compressor on<br>1 = activation based on Sc, off with compressor off. | 0 | 0 | 1 | - | S | NO |
| F1 | Evaporator fan activation threshold (only if F0 = 1, 2, 3) | 5/ 41 | -50/ -58 | 50/ 122 | °C/°F | S | NO |
| F10 | Evaporator fan forcing time at maximum speed<br>(0 = function disabled) | 0 | 0 | 240 | min | S | NO |
| F11 | Fan ON time with low humidity level | 60 | 0 | 600 | s | S | NO |
| F12 | Fan OFF time with low humidity level | 120 | 0 | 600 | s | S | NO |
| F13 | Fan ON time with medium humidity level | 120 | 0 | 600 | s | S | NO |
| F14 | Fan OFF time with medium humidity level | 120 | 0 | 600 | s | S | NO |
| F15 | Fan ON time with high humidity level | 180 | 0 | 600 | s | S | NO |
| F16 | Fan OFF time with medium humidity level | 120 | 0 | 600 | s | S | NO |
| F17 | Temperature control differential for compressor activation with low humidity level | 2.0/ 3.6 | 0.1/ 0.2 | 20/ 36 | Δ °C/ °F | S | NO |
| F18 | Temperature control differential for compressor activation with medium humidity level | 2.0/ 3.6 | 0.1/ 0.2 | 20/ 36 | Δ °C/ °F | S | NO |
| F19 | Temperature control differential for compressor activation with high humidity level | 2.0/ 3.6 | 0.1/ 0.2 | 20/ 36 | Δ °C/ °F | S | NO |
| F2 | Evaporator fans with compressor off:<br>0 = see F0;<br>1 = always off with compressor off;<br>2 = on for anti-stratification;<br>3 = on for humidity control. | 1 | 0 | 3 | - | S | NO |
| F3 | Evaporator fans during defrost: 0 = on; 1 = off. | 1 | 0 | 1 | - | S | NO |
| F4 | Condenser fan deactivation temperature | 40/ 104 | -50/ -58 | 200/ 392 | °C/°F | S | NO |
| F4r | Humidification output during defrosts:<br>0 = active based on humidity control;<br>1 = deactivated during defrosts | 1 | 0 | 1 | - | S | NO |
| F5 | Evaporator fan cut-off temperature (hysteresis 1 °C) | 5/41 | F1 | 200/392 | °C/°F | S | NO |
| F5d | Condenser fan activation differential | 5/ 9 | 0.1/ 0.2 | 60/ 108 | Δ °C/ °F | S | NO |
| Fd | Post-dripping time after defrost (fans off with control active) | 2 | 0 | 15 | min | S | NO |
| Fd0 | Evaporator fan ON time for anti-stratification during the day | 5 | 1 | 100 | min | S | NO |
| FdF | Evaporator fan OFF time for anti-stratification during the day (0 = always ON during the day) | 10 | 0 | 100 | min | S | NO |
| Fn0 | Evaporator fan ON time for anti-stratification at night | 5 | 1 | 100 | min | S | NO |
| FnF | Evaporator fan OFF time for anti-stratification at night (0 = always ON at night) | 20 | 0 | 100 | min | S | NO |
| Fpd | Evaporator fans during post-dripping: 0 = on; 1 = off. | 1 | 0 | 1 | - | S | NO |
| Frd | Evaporator fan activation differential (including variable speed) | 2/ 3.6 | 0.1/ 0.2 | 20/ 36 | Δ °C/°F | S | NO |
| GF | Custom function associated with the specific button (Large models only):<br>0 = Not configured; 1 = Light; 2 = Auxiliary output; 3 = Continuous cycle. | 3 | 0 | 3 | - | S | YES |
| GF1 | Custom function associated with the UP arrow - see GF | 2 | 0 | 3 | - | S | YES |
| GF2 | Custom function associated with the DOWN arrow - see GF | 1 | 0 | 3 | - | S | YES |
| GFA_1 | Generic alarm function, control probe 1<br>0 = not configured;<br>1 = outlet temperature (Sm);<br>2 = defrost temperature (Sd);<br>3 = intake temperature (Sr);<br>4 = not used;<br>5 = not used;<br>6 = auxiliary evaporator defrost temperature (Sd2);<br>7 = auxiliary probe 1;<br>8 = auxiliary probe 2;<br>9 = ambient temperature;<br>10 = not used;<br>11 = glass temperature;<br>12 = not used;<br>13 = condensing temperature;<br>14 = humidity;<br>15 = frost protection temperature;<br>16 = product temperature. | 0 | 0 | 16 | - | S | NO |
| GFA_2 | Generic alarm function, control probe 2 - see GFA_1 | 0 | 0 | 20 | - | S | NO |
| GFA_D | Generic alarm function, differential | 0.1 | 0.1 | 99.9 | - | S | NO |
| GFA_De | Generic alarm function, delay | 0 | 0 | 30000 | S | S | NO |
| GFA_E | Generic alarm function, enable<br>0 = always; 1 = unit ON; 2 = unit OFF;<br>3 = defrost; 4 = not used;<br>5 = continuous cycle; 6 = duty setting; 7 = standby;<br>8 = compressor or reverse output active;<br>9 = door open; 10 = active alarm. | 8 | 0 | 10 | - | S | NO |
| GFA_Hth | Generic alarm function, high temperature threshold | 0 | GFA_Lth | 999 | - | S | NO |
| GFA_Lth | Generic alarm function, low temperature threshold | 0 | -99 | GFA_Hth | - | S | NO |
| GFS_1 | Generic On/Off function: control probe 1 - see GFA_1 | 0 | 0 | 16 | - | S | NO |
| GFS_2 | Generic On/Off function: control probe 2 - see GFA_1 | 0 | 0 | 16 | - | S | NO |
| GFS_D | Generic On/Off function, differential | 0 | 0 | 99.9 | - | S | NO |
| GFS_E | Generic On/Off function, enable - see GFA_E | 8 | 0 | 10 | - | S | NO |
| GFS_S | Generic On/Off function, set point | 0 | -99 | 999 | - | S | NO |

| Code | Description | Def. | Min | Max | UOM | User | User term. |
|---|---|---|---|---|---|---|---|
| GFS_T | Generic On/Off function, type: 0 = direct; 1 = reverse. | 0 | 0 | 1 | - | S | NO |
| H0 | Serial address | 1 | 1 | 247 | - | S | YES |
| H10 | BMS serial port baud rate (bit/s)<br>0 = 1200 / 3 = 9600 / 6 = 57600<br>1 = 2400 / 4 = 19200 / 7 = 115200<br>2 = 4800 / 5 = 38400 | 4 | 0 | 8 | - | S | YES |
| H11 | BMS serial port configuration (stop bits and parity)<br>0 = 1 stop bit, no parity; 1 = 2 stop bits, no parity;<br>2 = 1 stop bit, even parity; 3 = 2 stop bits, even parity;<br>4 = 1 stop bit, odd parity; 5 = 2 stop bits, odd parity; | 1 | 0 | 5 | - | S | YES |
| H14 | Time light stays on after closing the door | 0 | 0 | 240 | min | U | NO |
| H8 | Output switched with time bands: 0 = Light; 1 = AUX. | 0 | 0 | 1 | - | S | NO |
| HA1, HA2, HA3 | Activation date and time of the first, second and third type HA alarm (read-only) | - | - | - | - | U | NO |
| HAn | Number of type HA alarms (read-only) | 0 | 0 | 6 | - | U | YES |
| Hb | Buzzer: 0 = disabled; 1 = enabled. | 1 | 0 | 1 | - | U | YES |
| Hdh | Delta for anti-heating function | 0 | 0 | 200/360 | Δ °C/°F | S | NO |
| HF1, HF2, HF3 | Activation date and time of the first, second and third type HF alarm (read-only) | - | - | - | - | U | NO |
| HFn | Number of type HF alarms (read-only) | 0 | 0 | 6 | - | U | YES |
| HMP | Operating hour threshold for maintenance alarm | hx1000 | 0 | 45 | 0 | S | NO |
| HMr | Reset operating hours | - | 0 | 1 | 0 | S | NO |
| Htd | HACCP alarm delay (0 = monitoring disabled) | 0 | 0 | 240 | min | S | NO |
| HU | Humidity level: 0: low; 1: medium; 2: high. | 1 | 0 | 2 | - | U | YES |
| IS | Working configuration | 0 | 0 | IS_Max | - | S | YES |
| IS_max | Number of embedded configurations (read-only) | 0 | 0 | 999 | | S | NO |
| kbM | Keypad operating mode: 0 = wake up; 1 = locked | 0 | 0 | 1 | - | S | NO |
| Lht | Switch on light command | 0 | 0 | 1 | - | U | NO |
| MA1 | Test mode, activate analogue output 1:<br>0 = disabled; 1 = automatic; 2 = activated at the value of MAr1. | 0 | 0 | 1 | - | S | NO |
| MA2 | Test mode, activate analogue output 2 - see MA1 | 0 | 0 | 1 | - | S | NO |
| MAr1 | Test mode, analogue output 1 request | 0 | 0 | 100 | % | S | NO |
| MAr2 | Test mode, analogue output 2 request | 0 | 0 | 100 | % | S | NO |
| Mr1 | Test mode, activate relay1:<br>0 = disabled; 1 = automatic; 2 = activated. | 1 | 0 | 2 | - | S | NO |
| Mr2 | Test mode, activate relay 2 - see Mr1 | 1 | 0 | 2 | - | S | NO |
| Mr3 | Test mode, activate relay 3 - see Mr1 | 1 | 0 | 2 | - | S | NO |
| Mr4 | Test mode, activate relay 4 - see Mr1 | 1 | 0 | 2 | - | S | NO |
| Mr5 | Test mode, activate relay 5 - see Mr1 | 1 | 0 | 2 | - | S | NO |
| Mr6 | Test mode, activate relay 6 - see Mr1 | 1 | 0 | 2 | - | S | NO |
| Mt | Manual mode duration (0 = manual mode always active) | 10 | 0 | 90 | min | S | NO |
| nFE | Enable copy parameters from NFC memory to controller:<br>0 = copy parameters disabled; 1 = copy parameters enabled. | 1 | 0 | 1 | - | S | NO |
| OfT | Gasket heater OFF time | 3 | 0 | 250 | min | S | NO |
| On | On/Off command 0 = Off; 1 = On. | 1 | 0 | 1 | - | U | YES (button) |
| OnT | Gasket heater ON time | 5 | 0 | 250 | min | S | NO |
| PDS | Service password | 22 | 0 | 999 | - | S | NO |
| r1 | Minimum set point | -50/ -58 | -99/ - 146.2 | r2 | °C/°F | S | NO |
| r2 | Maximum set point | 50/ 122 | r1 | 200/ 392 | °C/°F | S | NO |
| r30 | Control mode:<br>0 = direct with defrost; 1 = direct; 2 = reverse | 0 | 0 | 2 | - | S | NO |
| r4 | Automatic night set point variation | 3/5.4 | -50/ -90 | 50/ 90 | Δ °C/°F | S | NO |
| r4d | Temperature control differential in ECO mode | 4/ 7.2 | 0.1/ 0.2 | 99.9/179.2 | Δ °C/°F | S | NO |
| r6a | Control probe for night-time operation:<br>0 = virtual probe Sv; 1 = intake temperature probe Sr | 0 | 0 | 1 | - | S | NO |
| rAL | Reset alarm log | 0 | 0 | 1 | - | S | YES |
| rd | Temperature control differential | 2/ 3.6 | 0.1/ 0.2 | 99.9/179.2 | Δ °C/°F | S | YES |
| rdh | Humidity control differential | 5 | 0.1 | 99.9 | % rH | S | YES |
| Rdrh | Gasket heater control differential | 2/ 3.6 | 0.1/ 0.2 | 20/ 36 | Δ °C/°F | S | NO |
| rHP | Reset HACCP event log | 0 | 0 | 1 | - | U | YES |
| rHt | Anti-sweat heater or fan activation time<br>(0 = function disabled) | 5 | 0 | 180 | min | S | NO |
| rHU | Anti-sweat heater or fan activation percentage<br>(0 = function disabled) | 70 | 0 | 100 | % | S | NO |
| rIA | Immediate external alarm digital input logic:<br>0 = direct logic; 1 = reverse logic. | 0 | 0 | 1 | - | S | NO |
| rIb | Delayed external alarm digital input logic<br>see DIA | 0 | 0 | 1 | - | S | NO |
| rIc | Enable defrost digital input logic - see rIA | 0 | 0 | 1 | - | S | NO |
| rId | Start defrost digital input logic - see rIA | 0 | 0 | 1 | - | S | NO |
| rIE | Door switch with compressor OFF digital input logic - see rIA | 0 | 0 | 1 | - | S | NO |
| rIF | Remote ON/OFF digital input logic - see rIA | 0 | 0 | 1 | - | S | NO |
| rIG | Curtain switch digital input logic - see rIA | 0 | 0 | 1 | - | S | NO |
| Rih | Start/stop continuous cycle digital input logic - see rIA | 0 | 0 | 1 | - | S | NO |
| rIo | Working parameter set changeover digital input logic - see rIA | 0 | 0 | 1 | - | S | NO |
| rIP | Door switch without compressor OFF digital input logic - see rIA | 0 | 0 | 1 | - | S | NO |
| rIS | Generic function alarm digital input logic - see rIA | 0 | 0 | 1 | - | S | NO |
| rIt | Low pressure switch digital input logic - see rIA | 0 | 0 | 1 | - | S | NO |
| rIU | AUX output activation digital input logic - see rIA | 0 | 0 | 1 | - | S | NO |
| rn | Dead band | 4/ 7.2 | 0 | 60/ 108 | Δ °C/°F | S | NO |
| rnH | Dead band for humidity control | 5 | 0 | 50.0 | Δ % rH | S | NO |
| ro | Control offset with probe error | 0 | 0 | 20/ 36 | Δ °C/°F | S | NO |
| rOA | Compressor digital output logic:<br>0=direct; 1=reverse | 0 | 0 | 1 | - | S | NO |
| rOb | Alarm digital output logic - see rOA | 0 | 0 | 1 | - | S | NO |
| rOc | Auxiliary digital output logic - see rOA | 0 | 0 | 1 | - | S | NO |
| rOE | Light digital output logic - see rOA | 0 | 0 | 1 | - | S | NO |
| rOG | Defrost digital output logic - see rOA | 0 | 0 | 1 | - | S | NO |
| rOH | Auxiliary evaporator defrost digital output logic - see rOA | 0 | 0 | 1 | - | S | NO |
| rOI | Evaporator fan digital output logic - see rOA | 0 | 0 | 1 | - | S | NO |
| rOj | Dehumidification digital output logic - see rOA | 0 | 0 | 1 | - | S | NO |

| Code | Description | Def. | Min | Max | UOM | User | User term. |
|---|---|---|---|---|---|---|---|
| rOk | Auxiliary compressor without rotation digital output logic - see rOA | 0 | 0 | 1 | - | S | NO |
| rOn | Pump down valve digital output logic - see rOA | 0 | 0 | 1 | - | S | NO |
| rOP | Drain heater digital output logic - see rOA | 0 | 0 | 1 | - | S | NO |
| rOq | Anti-sweat heater digital output logic - see rOA | 0 | 0 | 1 | - | S | NO |
| rOS | Generic On/Off function digital output logic - see rOA | 0 | 0 | 1 | - | S | NO |
| rOt | Condenser fan digital output logic - see rOA | 0 | 0 | 1 | - | S | NO |
| rOu | Humidification digital output logic - see rOA | 0 | 0 | 1 | - | S | NO |
| rOv | Reverse digital output with dead band control logic - see rOA | 0 | 0 | 1 | - | S | NO |
| rOw | Auxiliary parallel compressor digital output logic - see rOA | 0 | 0 | 1 | - | S | NO |
| rOx | Gasket heater digital output logic - see rOA | 0 | 0 | 1 | - | S | NO |
| rOy | Auxiliary compressor with rotation digital output logic - see rOA | 0 | 0 | 1 | - | S | NO |
| rOz | External dehumidifier digital output logic - see rOA | 0 | 0 | 1 | - | S | NO |
| rr | Reverse output differential | 2/ 3.6 | 0 | 20/ 36 | Δ °C/°F | S | NO |
| rrH | Dehumidification differential | 5 | 0 | 50.0 | Δ % rH | S | NO |
| rSA | Reset alarms | 0 | 0 | 1 | - | U | YES |
| rSC | Restore default values | 0 | 0 | 1 | - | S | YES |
| Sc1 | Custom temperature set point 1 | 0 | r1 | r2 | °C/°F | S | NO |
| Sc2 | Custom temperature set point 2 | 0 | r1 | r2 | °C/°F | S | NO |
| Sc3 | Custom temperature set point 3 | 0 | r1 | r2 | °C/°F | S | NO |
| Sh1 | Custom humidity set point 1 | 0 | 0 | 100 | % rH | S | NO |
| Sh2 | Custom humidity set point 2 | 0 | 0 | 100 | % rH | S | NO |
| Sh3 | Custom humidity set point 3 | 0 | 0 | 100 | % rH | S | NO |
| St | Temperature control set point | 50/ 122 | r1 | r2 | °C/°F | U | YES |
| St_Idx | Custom set point index | 0 | 0 | 3 | - | S | NO |
| Sth | Humidity control set point | 90 | 0.0 | 100.0 | % rH | U | YES |
| Strh | Gasket heater control set point | -18/ -0.4 | -50/ -58 | 200/392 | °C/°F | S | NO |
| td1..8-d | Defrost 1 to 8 - day:<br>0 = event disabled; 1-7 = Monday to Sunday;<br>8 = Monday to Friday; 9 = Monday to Saturday;<br>10 = Saturday & Sunday; 11 = every day. | 0 | 0 | 11 | - | U | NO |
| td1..8-hh | Defrost 1 to 8 - hours | 0 | 0 | 23 | hours | U | NO |
| td1..8-mm | Defrost 1 to 8 - minutes | 0 | 0 | 59 | minutes | U | NO |
| td1..8-time | Defrost 1 to 8 (Applica) | 00:00:00 | 00:00:00 | 23:59:59 | - | U | NO |
| TdL | Differential to enable humidity control | 0 | 0 | 20/ 36 | Δ °C/°F | U | NO |
| tE1...8-d | End time band 1 to 8 - day, see (td1...8-d) | 0 | 0 | 11 | - | U | NO |
| tE1...8-hh | End time band 1 to 8 - hours | 0 | 0 | 23 | hours | U | NO |
| tE1...8-mm | End time band 1 to 8 - minutes | 0 | 0 | 59 | minutes | U | NO |
| tE1...8-time | End time band 1 to 8 (Applica) | 00:00:00 | 00:00:00 | 23:59:59 | - | U | NO |
| TestMode | Enable test via BMS serial port | 0 | 0 | 255 | - | (*) | NO |
| THL | Maximum temperature to enable humidity control | 0 | -60/ -76 | 60/ 140 | °C/°F | S | NO |
| TLL | Minimum temperature to enable humidity control | 0 | -60/ -76 | 60/ 140 | °C/°F | S | NO |
| tS1...8-d | Start time band 1 to 8 - day, see (td1...8-d) | 0 | 0 | 11 | - | U | NO |
| tS1...8-hh | Start time band 1 to 8 - hours | 0 | 0 | 23 | hours | U | NO |
| tS1...8-mm | Start time band 1 to 8 - minutes | 0 | 0 | 59 | minutes | U | NO |
| tS1...8-time | Start time band 1 to 8 (Applica) | 00:00:00 | 00:00:00 | 23:59:59 | - | U | NO |
| ucd | Compressor stop delay after HLVP protection activated | 5 | 0 | 60 | s | S | NO |
| udE | Enable display of HLVP protection alarms<br>(EHI and ELO, see alarm table) | 0 | 0 | 1 | - | S | NO |
| uEn | Enable HLVP protection: 0 = disabled; 1 = enabled. | 0 | 0 | 1 | - | S | NO |
| uHi | High voltage protection start threshold | 245 | 0 | 350 | V | S | NO |
| uHo | High voltage protection end threshold | 255 | 0 | 350 | V | S | NO |
| uLi | Low voltage protection start threshold | 205 | 0 | 350 | V | S | NO |
| uLo | Low voltage protection end threshold | 195 | 0 | 350 | V | S | NO |
| uof | OFF time for humidity duty setting operation | 60 | c2 | 120 | min | S | NO |
| uon | ON time for humidity duty setting operation | 10 | c3 | 120 | min | S | NO |

Tab. 8.m

(*) Parameter only available via BMS serial.

(**) According to the selected confi guration and the wizard settings. See the list of available configurations in the Appendix.

## 8.2 Configuring the iJW controller via the Applica app

The "Applica" app can be used to configure the controller from a mobile device (smartphone, tablet), via NFC (Near Field Communication) or BLE (Bluetooth™ Low Energy). The app is used to configure the commissioning parameters and set groups of preset parameters according to specific needs (configurations).

Procedure:

1. download the CAREL "Applica" app;
2. (on the mobile device) start the app for commissioning the controller;
3. enable NFC and/or BLE communication on the mobile device;
4. if using an NFC connection: tap the NFC icon and move the device near the controller to start reading the values. Both when connecting to the device and when uploading the configuration parameters, the mobile device must be less than 10 mm from the controller;
5. if using a BLE connection:
   - 1. tap the "BLUETOOTH" icon to view the iJM devices available within a range of 10 m.
   - 2. select the device to connect to

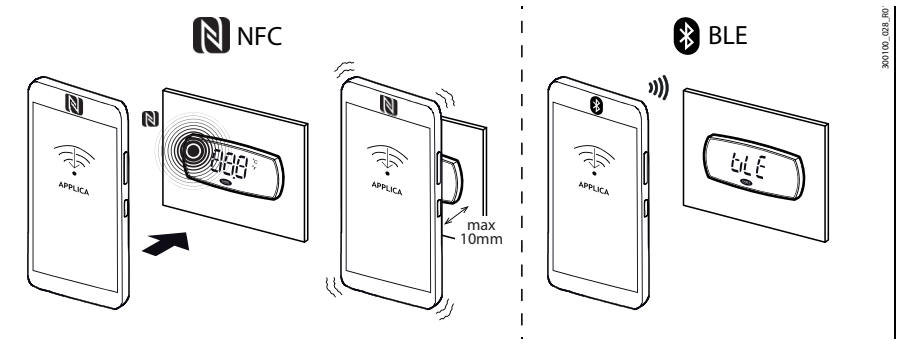


Fig. 8.a

**Notice:** during the first connection, the Applica app aligns itself with the software version on the iJW controller via a cloud connection; this means a mobile data connection is needed at least for this first connection. If the data connection is not available, the required packet can be retrieved from the could as soon as the connection is restored (access the "Packet Manager" section of Applica).

Applica makes it easy to set the parameters on the iJW controller and manage parameter configurations using the hamburger menu at the top left of the screen.

### 8.2.1 Configurations

Parameter configurations can be created and saved, and then uploaded to the iJW controller using the configuration software or APPLICA app. Configurations can be created either using the default values loaded by Carel, or starting from user-set values on the controller iJW, or alternatively only certain specific values can be modified. Furthermore, using the Applica app it is possible to clone the parameter configuration on board of a control and apply it to another control. See the paragraph '' Copying parameter configurations ''. To create a configuration using the SPARK Applica Desktop configuration software - released under license directly by Carel - and starting from the default values on the controller, connect the PC to the BMS connector (RS485) using converter P/N CVSTDUMOR0, as shown in the figure:

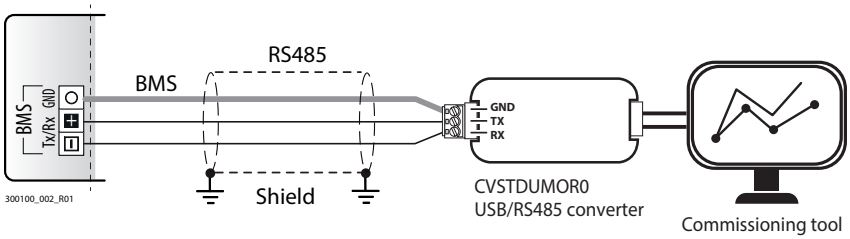


Fig. 8.b

The following procedure is used to create a configuration, starting from the actual values on the controller:

1. In the "Target" tab add a "target", i.e. the iJW controller to communicate with.
2. Set the type of serial communication and change the connection parameters (default for the iJW baud rate 19200, parity None and 2 stop bit)
3. Select "Connect".
4. From the "Configurations" tab, select "Add configuration" (e.g. 1).
5. After having created and selected the chosen configuration, select "Copy values to configuration".
6. The "Configuration value" column will now be populated with the current values on the iJW controller. The values can now be modified to create a custom configuration.
7. The configuration created as above can be immediately uploaded to the iJW controller by selecting "Applica configuration" or saved for future use by selecting "Export configuration".

**Notice:** to create a configuration based on the default values loaded by Carel on the iJW controller, simply follow the same procedure as described above, and in step 6 select "Applica default values" rather than "Copy values to configuration".

# 9. TECHNICAL SPECIFICATIONS

| | | |
|---|---|---|
| **Physical specifications** | Case | Polycarbonate |
| | Ball pressure test temperature | 125°C |
| | Ingress protection | IEC:<br>• Rear: IP20<br>• Front panel: IP65 (Small, large with clips); IP43 (Large without clips<br>UL:<br>• Type 1 (Small, large -5 ° C to 60 ° C)<br>• Open type (Large -20 ° C to 60 °) |
| | Front cleaning | Use soft, non-abrasive cloth and neutral detergent or water |
| **Environmental conditions** | Operating temperature | -20T60 °C, <90% RH non-condensing |
| | Storage temperature | -40T80°C, <90% RH non-condensing;<br>-20T80°C, <90% RH non condensing for models with battery |
| **Electrical specifications** | Rated power supply | • 100-240 Vac |
| | Operating power supply voltage | • 90-264 Vac |
| | Input frequency | 50/60Hz |
| | Maximum current draw | • 100 mA rms (Small);<br>• 220 mA rms (Large); |
| | Min power consumption min/max | 700 mW / 3W (Smalll)<br>800 mW / 8W (Large) |
| | Clock | Precision: 20 ppm at 25°C;<br>100 ppm in the temperature range -20T60 °C.<br>Date/time storage with controller off up to 2 years for models with battery (-20T60°C) |
| | Software class and structure | A |
| | Environmental pollution class | 2 (small); 3 (large) |
| | Class of protection against electric shock | To be incorporated in class I or II appliances |
| | Type of action and disconnection | 1.C |
| | Rated impulse voltage | 100 - 240 Vac input and relay output: 2.5 kV (Small)<br>100 - 240 Vac input and relay output: 4 kV (Large) |
| | Surge immunity category | 100 - 240 Vac input and relay outputs: II (Small)<br>100 - 240 Vac input and relay outputs: III (Large) |
| | Control device construction | Device to be incorporated |
| | Terminal block | NO1, NO2, C1, NO3, NO4, NO5, C5, C6, NC6, NO6, L, N:<br>• Removable male-female 30-12 AWG/0.05-3.3 mm²<br>S1, S2, S3, DI1, DI2, GND:<br>• Removable male-female 30-17 AWG/0.05-1 mm²<br>S1, S2, S3, S4, DI1, DI2, GND (Large):<br>• Removable male-female 30-12 AWG/0.05-3.3 mm²<br>BMS, 0-5 Vrat:<br>• Removable male-female 30-17 AWG/0.05-1 mm²<br>0-10 V/PWM:<br>• JST ZH connector 32-26 AWG/0.03-0.13 mm² |
| | Purpose of the controller | Electrical control device |
| **User interface** | Buzzer | Integrated |
| | Display | 3 digits, decimal point, and multi-function icons |
| | Keypad | Max 6 keys (Small); Max 8 keys (Large) |
| **Connectivity** | NFC | Max distance 10 mm, variable according to the mobile device used |
| | Bluetooth™ Low Energy (opt.) | Max distance 10 m, variable according to the mobile device used |
| | BMS serial interface (opt.) | RS485 not optically-isolated |
| | TTL serial interface (opt.) | Not opto-isolated, 3.3 V power supply,<br>maximum number of devices connected: 1 |
| **Analogue inputs (Lmax=10m)** | S1, S2, S3, S4:<br>NTC/ NTC-HT/ NTC-LT/ PT1000/ PTC | NTC: resolution 0.1°C; 10 kΩ@25°C; beta 3435; error: ±1 °C in the range -50T50°C, ±3 °C in the range 50T90°C<br>NTC-HT: resolution 0.1°C; 50 kΩ@25°C; beta 3977; error: ±1.5°C in the range -15T115°C, ±4°C in the range 40T-15°C and 115T150°C:<br>NTC_LT: resolution 0.1°C; 750Ω@25°C; beta 3969; error: ±1.5°C in the range -20T10°C, ±4°C in the range 80T-20°C and 10T55°C<br>PT1000: resolution 0.1°C; 1 kΩ@0°C; error: ± 1°C in the range - 60T120°C<br>PTC: resolution 0.1°C; 985 Ω@25°C; error: ±2 °C in the range -50T50°C, ±4 °C in the range 50T150°C |
| | 5: 0-5 Vrat (opt.) | 0-5 Vrat: error 2% fs, typical 1% |
| **Digital inputs** | DI1, DI2 configurable as fast digital inputs | Voltage-free contact, not optically-isolated, typical closing current 5 mA, voltage with contact open 12 V, max contact resistance 50 Ω Fast digital inputs: 0-10 V: error 2 % fs, typical 1 % |
| **Digital outputs (Small)** | NO1, NO2, NO3, NO4<br>**Notice:**<br>• NO1: max 12 A;<br>• NO2+NO3+NO4: max 12 A | NO1 (2 hp):<br>IEC60730: 10(6) A, 250 Vac; UL60730: 16A, 250 Vac; 10FLA, 60LRA, 250 Vac; 12FLA, 72LRA, 125 Vac; Pilot duty B300, 250 Vac<br>NO2 (8 A): IEC60730: 8(3) A, 250 Vac; UL60730: 8A, 250 Vac; 2FLA, 12LRA, 250 Vac; Pilot duty C300, 250 Vac<br>NO3, NO4 (5 A): IEC60730: 5(1) A, 250 Vac; UL60730: 5A, 250 Vac; 1.9FLA, 11.4LRA, 250 Vac; Pilot duty C300, 250 Vac |
| **Digital outputs (Large)** | NO1, NO2, NO3, NO4, NO5, NO6, NC6<br>**Notice:**<br>• NO1+NO2: max 10 A;<br>• NO3+NO4: max 10 A. | NO1, NO2, NO3, NO4 (8 A):<br>IEC60730: 8(3) A, 250 Vac;<br>UL60730: 8 A, 250 Vac; 2FLA, 12LRA, 250 Vac;<br>Pilot duty C300, 250 Vac<br>NO5 (30 A):<br>IEC60730: 20(10) A, 250 Vac;<br>UL60730: 16 A, 250 Vac;<br>16FLA, 96LRA, 250 Vac<br>NO6, NC6 (16 A SPDT):<br>IEC60730: 12(2) A, 250 Vac NO; 12(2) A, 250 Vac NC; 2(2) A, 250 Vac CO;<br>UL60730: 12 A, 250 Vac NO; 12 A, 250 Vac NC; 5FLA, 30LRA,<br>250 Vac NO; Pilot duty C300, 250 Vac NO |

| | | |
|---|---|---|
| **Power supply / Relay outputs** | Isolation from very low voltages (digital/analogue inputs, options) | reinforced / SELV |
| | Isolation between independent relay outputs | basic |
| **Power supply PROBES** | 5V | 5 Vdc ± 2 % to power the 0 to 5 V ratiometric probes.<br>Maximum current delivered: 10 mA |
| **Cable lengths** | Analogue inputs/outputs, digital inputs/outputs, probe power | < 10 m |
| | BMS serial port (RS485): | < 500 m with shielded cable |
| | BMS serial (TTL) | < 2 m |
| **Conformity** | Electrical safety compliance - LVD directive and UL certification | IEC/EN/UL 60730-1, CSA E60730-1, IEC 60335-1 (sections 29 & 30) |
| | Electromagnetic compatibility - EMC directive | IEC/EN 61000-6-1, IEC/EN 61000-6-2, IEC/EN 61000-6-3, IEC/EN 61000-6-4 |
| | For use with flammable refrigerants, the controllers described in this document have been tested and found to comply with the following requirements of the IEC 60335 series standards:<br>• Annex CC of IEC 60335-2-24: 2010, referred to in clause 22.109, and Annex BB of IEC 60335-2-89: 2010, referred to in clause 22.108; components that produce arcs or sparks during normal operation have been tested and found to comply with the requirements of UL/IEC 60079-15;<br>• IEC/EN/UL 60335-2-24 (clauses 22.109, 22.110) for household refrigerators and freezers;<br>• IEC/EN/UL 60335-2-40 (clauses 22.116, 22.117) for electric heat pumps, air conditioners and dehumidifiers;<br>• IEC/EN/UL 60335-2-89 (clauses 22.108, 22.109) for commercial refrigerating appliances.<br><br>Compliant for the following flammable refrigerants: Propane (R-290), ammonia (R-717), isobutane (R-600a), propylene (R-1270), methane (R-50), n-butane (R-600), R-1234ze, R- 1234yf, R-32, R-455A, R-454B<br>The controllers have been verified for the maximum temperatures of all components, which during the tests required by IEC 60335 cl. 11 and 19 do not exceed 272°C. The acceptability of these controllers in the final application where flammable refrigerants are used needs to be reviewed and verified depending on the final application. | |
| | Wireless compliance | RED directive (EN 301489-1), FCC (section 15, subsection B), IC. |

Tab. 9.a

## 9.1 Connector/cable table

| Ref. | Description | Wiring terminals | Wire cross-section (mm²) | Lmax (m) |
|---|---|---|---|---|
| L, N | Controller power supply | Removable screw terminal, 2-pin, pitch 5 mm (Small without options)/5.08mm (Small with options, Large) | 0.05-3.3 (30-12 AWG) | 10 |
| S1 ... S3 (Small) | Probes | Removable terminal;<br>5-pin, pitch 3.81 mm (Small, without options)<br>2x3 pins, pitch 3.5 mm (Small, with options)<br>4+3 pins, pitch 5.08 mm (Large) | 0.05-1 (30-17 AWG) | 10 |
| S1 to S3, S4 (Large) | Probes | Removable terminal;<br>5-pin, pitch 3.81 mm (Small, without options)<br>2x3 pins, pitch 3.5 mm (Small, with options)<br>4+3 pins, pitch 5.08 mm (Large) | 0.05-3.3 (30-12 AWG) | 10 |
| S5, 5 V | Probe power supply ratiometric | Removable screw terminal, 2-pin, pitch 3.5 mm | 0.05-1 (30-17 AWG) | 10 |
| DI1, DI2 | Digital inputs | Removable screw terminal, 5-pin, pitch 5.08 mm (Small, without options)<br>2x3 pins, pitch 3.5 mm (Small, with options)<br>4+3 pins, pitch 5.08 mm (Large) | 0.05-3.3 (30-12 AWG) | 10 |
| NO1...NO6 | Digital outputs | Removable terminal, 5-pin (Small), 4x3-pin (Large), pitch 5.08 mm | 0.05-3.3 (30-12 AWG) | 10 |
| BMS | BMS serial port (RS485): | Removable screw terminal, 3-pin, pitch 3.5 mm | 0.05-1 (30-17 AWG) | 500, with shielded cable, cross section at least 0.33 mm² (22 AWG) |
| TTL | BMS serial (TTL) | JST ZH connector, 4-pin, pitch 2 mm - Connection cable part number (see "Introduction"). | 0.03-13 (32-26 AWG) | 2 |

Tab. 9.b

# 10. ALARMS AND SIGNALS

## 10.1 Signals

Signals are messages shown on the display to notify the user of the control procedures in progress (e.g. defrost) or to confirm keypad input.

| Display code | Description |
|---|---|
| Ble | Bluetooth™ connection in progress |
| dEF | Defrost running |
| Loc | Display locked |
| Off | Switch OFF |
| ECO | ECO mode active |
| CC | Continuous cycle running |

Tab. 10.a

The codes of all the alarms listed in the "Alarm table" are also shown on the display.

## 10.2 Types of alarms

The iJW controller can display two types of malfunctions:

- **warning**, when this type of error occurs, the alarm code is shown on the display, alternating with the main value, and the "Service" icon is shown on the display, however the buzzer does not sound, no relay is activated; some signals fall under this category, e.g. defrost ended due to maximum time, dirty condenser, anomalous temperature alarms, configuration errors.
- **alarms**, when this type of error occurs, the alarm code is shown on the display, alternating with the main value, and the "Service" icon comes on, the buzzer flashes and the relay is activated; this category includes alarms for which with the relay is configured as an alarm, probe errors, temperature alarms, frost protection, communication errors with the VCC compressor, power supply over and under voltage, etc.

Notice:

- the digital outputs can be configured to signal the alarm status, normally open or normally closed. See "Digital outputs".
- An alarm can also be activated from an external contact, immediate or delayed. See "Digital inputs".

The warning and alarm signals can be immediate or delayed by parameter (see the Alarm table).
Both warnings and alarms can be reset automatically, manually or semi-automatically:

- **automatic**, when the cause is no longer present, the alarm also ceases;
- **manual**, when the cause is no longer present, the alarm remains active until manually reset by parameter;
- **semi-automatic**, reset is automatic 3 times in an hour, after which manual reset is required.

Active alarms are signalled by the buzzer (see parameter Hb) and the flashing of the "Service" icon . The alarm code is shown on the display, alternating with the main value. Pressing any button mutes the buzzer. If more than one error occurs, these are displayed in sequence. When an alarm is cleared, it is stored in the alarm log containing a maximum of five alarms, in a FIFO list (the 6th alarm overwrites the 1st alarm, and so on). The error log can be accessed from the user terminal, via supervisor or Applica app (Bluetooth™ connection only).

Example
Display after HI error.

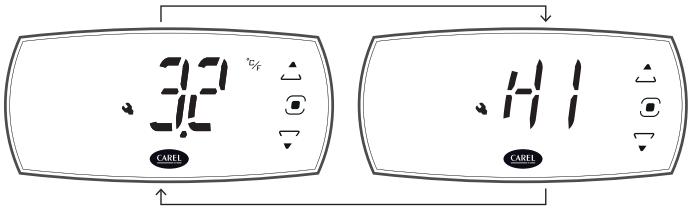

Fig. 10.a

The alarms can be reset manually using parameter rSA, from the user terminal or Applica Desktop configuration software, or in Applica (Bluetooth™ connection only) using the specific command on the Alarms page ("Service" or "Manufacturer" level access is required). If the condition that generated the alarm is still present, the alarm will be reactivated after resetting.

The alarm log can be deleted using parameter rAL, accessible from the user terminal, Applica Desktop configuration software or in Applica (Bluetooth™ connection only) using the specific command on the Alarms page ("Service" or "Manufacturer" level access is required).

**Notice:** deleting the alarm log is irreversible.

## 10.3 Alarm table

| Display code | Log code (*) | Description | Delay (default) | Icon display | Alarm relay | Buzzer | Reset | Effects on control |
|---|---|---|---|---|---|---|---|---|
| Afr | 29 | Frost protection | Afd (1 min) | YES | YES | YES | Automatic | Stop compressor |
| AtS | 30 | Restart in pump down | - | NO | NO | NO | Automatic | - |
| CE | 28 | Configuration write error | - | NO | NO | NO | Automatic | - |
| cht | 17 | High pre-alarm Condenser temperature | - | NO | NO | NO | Automatic | - |
| CHt | 18 | High conductivity Condenser temperature | Acd (0 min) | NO | NO | NO | Manual | Compressor shutdown |
| dA | 14 | Delayed alarm from external contact | A7 (1 min) | YES | YES | YES | Automatic | Compressor operation in duty setting mode (par. A6); dead band, lights and auxiliary output OFF |
| dor | 15 | Door open | Add (5 s) | YES | YES | YES | Automatic | See "Door management" |
| E1 | 1 | Probe 1 faulty or disconnected | - | NO | NO | NO | Automatic | According to the CONNECTIONS |
| E2 | 2 | Probe 2 faulty or disconnected | - | NO | NO | NO | Automatic | |
| E3 | 3 | Probe 3 faulty or disconnected | - | NO | NO | NO | Automatic | |
| E4 | 4 | Probe 4 faulty or disconnected | - | NO | NO | NO | Automatic | |
| E5 | 5 | Probe 5 faulty or disconnected | - | NO | NO | NO | Automatic | |
| Ed1 | 10 | Defrost terminated after maximum time | - | NO | NO | NO | Automatic | - |
| Ed2 | 11 | Defrost on second evaporator terminated after maximum time | - | NO | NO | NO | Automatic | - |
| EHI | 36 | High temperature alarm power supply | - | YES | YES | YES | Automatic | - |
| ELO | 37 | Low pressure alarm power supply | - | YES | YES | YES | Automatic | - |
| Etc | 9 | Clock error | - | NO | NO | NO | Manual | Time bands disabled |
| GHI | 19 | Generic alarm high threshold | GFA_De (0 s) | YES | YES | YES | Automatic | - |
| GLO | 20 | Generic alarm low threshold | GFA_De (0 s) | YES | YES | YES | Automatic | - |
| HA | 21 | Type HA HACCP alarm (high temp. during operation) | - | NO | NO | NO | Manual | - |
| HF | 22 | Type HF HACCP alarm (high temp. after blackout) | - | NO | NO | NO | Manual | - |
| HI | 24 | High temperature | Ad (120 s) | YES | YES | YES | Automatic | - |
| IA | 13 | Immediate alarm from external contact | - | YES | YES | YES | Automatic | Compressor operation in duty setting mode (par. A6); dead band OFF |
| LO | 23 | Low temperature | Ad (120 s) | YES | YES | YES | Automatic | - |
| LP | 32 | Low pressure | - | YES | YES | YES | Semi-automatic | Compressor shutdown |
| MAn | 38 | Output status overridden in manual mode | - | YES | YES | YES | Automatic | - |
| Pd | 26 | Maximum time Pump down | - | YES | YES | YES | Automatic | - |
| rE | 12 | Control probe faulty or disconnected | - | YES | YES | YES | Automatic | Compressor operation in duty setting mode (par. c4); dead band OFF |
| rSF | 31 | Refrigerant leak alarm | - | YES | YES | YES | Manual | Switch off all actuators |
| SF | 27 | Configuration not completed correctly | - | NO | NO | NO | Manual | - |
| SrC | 35 | Maintenance request | - | YES | YES | YES | Manual | - |

Tab. 10.b

(*) This is the code used to record and display the alarm in the Applica app.

## 10.3.1 Alarm troubleshooting table

| Display code | Log code (*) | Description | Checks |
|---|---|---|---|
| AtS | 30 | Restart in pump down | Check cPt status (0=pump down at power up disabled) |
| cht | 17 | High pre-alarm condenser temperature | Verify the status of the condensing unit, perform cleaning if necessary |
| CHt | 18 | High conductivity condenser temperature | Verify the status of the condensing unit, perform cleaning if necessary |
| dA | 14 | Delayed alarm from external contact | Check the status of digital input DI1 or DI2 - Remote delayed alarm<br>Detect anomaly on the external device connected to the digital inputs |
| Dor | 15 | Door open | Check door opening and door sensor contact.<br>Check configuration of "DIE" and "rIE" parameters |
| E1 | 1 | Probe 1 faulty or disconnected | Check settings /P1 for probes S1 according<br>check probe is not broken and connected |
| E2 | 2 | Probe 2 faulty or disconnected | Check settings /P2 for probes S2 according<br>check probe is not broken and connected |
| E3 | 3 | Probe 3 faulty or disconnected | Check settings /P3 for probes S3 according<br>check probe is not broken and connected |
| E4 | 4 | Probe 4 faulty or disconnected | Check settings /P4 for probes S4 according<br>check probe is not broken and connected |
| E5 | 5 | Probe 5 faulty or disconnected | Check settings /P5 for probes S5 according<br>check probe is not broken and connected |
| Ed1 | 10 | Defrost terminated after maximum time | Check the evaporator status (correct fan operation, expansion valve opening).<br>Check the position of the defrost probe. It should be placed at the point on the evaporator where the last part of the ice melts.<br>Check that the defrost duration is not too short (dP1) is too short<br>Check fan settings during defrost F3 |
| Ed2 | 11 | Defrost on second evaporator terminated after maximum time | Check the status of the cabinet: correct operation of the fan, check the opening of the expansion valve.<br>Check defrost probe position: the probe must be positioned at the point of the evaporator where the last part of the ice melts.<br>Check that the dP2 parameter has not been set too short.<br>Check the fan setting during defrost F3. |
| EHI | 36 | High temperature alarm power supply | Check electrical connections<br>Check power voltage |
| ELO | 37 | Low pressure alarm power supply | Check electrical connections<br>Check power voltage |
| Etc | 9 | Clock error | Synchronize date and time with the device in use (PC or smartphone)<br>Upon completion of operations, perform a manual alarm reset to verify alarm reset |
| GHI | 19 | Generic alarm high threshold | Check the settings of the generic alarm function and the threshold "GFA_Ht" |
| GLO | 20 | Generic alarm low threshold | Check the settings of the generic alarm function and the threshold "GFA_Ht" |
| HA | 21 | Type HA HACCP alarm (high temp. during operation) | Check the reading of the control probe and the thresholds "AH/AHA" "A1" "A0" |
| HF | 22 | Type HF HACCP alarm (high temp. after blackout) | Check the reading of the control probe and the thresholds "AH/AHA" "A1" "A0" |
| HI | 24 | High temperature | Check the reading of the control probe and the thresholds "AH/AHA" "A1" "A0" |
| IA | 13 | Immediate alarm from external contact | Check the status of digital input DI1 or DI2 - Remote alarm<br>Detect anomaly on the external device connected to the digital inputs |
| LO | 23 | Low temperature | Check the reading of the control probe and the thresholds "AL/ALA" "A1" "A0" |
| LP | 32 | Low pressure | check status of low pressure switch |
| PD | 26 | Maximum time Pump down | Check c10 setting (pressure or time)<br>Check cPt: maximum time for pump down procedure to end<br>Check low pressure switch functionality" |
| rE | 12 | Control probe faulty or disconnected | Verify parameter setting /4<br>if /4= 0, check air off temperature probe connection and status<br>if /4 = 100, check air on temperature probe connection and status<br>if /4 is between 1 and 99, check both probes" |
| rSF | 31 | Refrigerant leak alarm | Check the charghe of the circuit<br>After operations are completed, perform a manual alarm reset to verify alarm return |
| Src | 35 | Maintenance request | check maintenance schedule |

Tab. 10.c

## 10.4 Low and high temperature alarms LO and HI

The high and low temperature alarm thresholds can be relative or absolute, depending on the value of parameter A1:

- A1 = 0: the relative thresholds AL and AH are considered and represent the deviation from the set point; the low temperature alarm is activated at set point - AL, and the high temperature alarm at set point + AH. If the set point changes, the alarm activation point also changes automatically.
- A1 = 1, the absolute thresholds ALA and AHA are considered, representing the absolute low temperature and high temperature alarm threshold, respectively. If the set point changes, the activation point remains the same.

| Par. | Description | Def | Min | Max | UOM | User | User terminal |
|---|---|---|---|---|---|---|---|
| d8 | Bypass high temperature alarm time after defrost | 30 | 1 | 240 | min | S | YES |
| A0 | High and low temperature alarm reset differential | 2 | 0.1 | 20 | °C/°F | S | NO |
| A1 | Alarm thresholds (AL, AH) relative to the set point St or absolute: 0 = relative; 1 = absolute | 0 | 0 | 1 | - | S | YES |
| A6 | Stop compressor with external alarm (Toff = 15 minutes, fixed): 0 = compressor always OFF; 100 = compressor always ON | 0 | 0 | 100 | min | S | NO |
| Ad | Delay time for high and low temperature alarms (AH, AL) | 120 | 0 | 240 | min | U | YES |
| Add | High temperature alarm bypass time for door open | 30 | 1 | 240 | min | U | YES |
| AH | Relative high temperature alarm threshold | 0 | 0 | 555/999 | Δ °C/°F | U | YES |
| AHA | Absolute high temperature alarm threshold | 537/999 | -100/-148 | 537/998 | °C/°F | U | YES |
| AL | Relative low temperature alarm threshold | 0 | 0 | 200/360 | Δ °C/°F | U | YES |
| ALA | Absolute low temperature alarm threshold | -100/-148 | -100/-148 | 537/998 | °C/°F | U | YES |

### Relative thresholds

Parameter AL is used to set the activation threshold for the low temperature alarm LO. The value measured by the control probe is continuously compared against the value of St-AL, and if it falls below this value for a time longer than Ad, the low temperature alarm LO is activated. The low temperature alarm LO ceases automatically when the temperature rises back above St-AL+A0.
Similarly, parameter AH is used to set the activation threshold for the high temperature alarm HI. The value measured by the control probe is continuously compared against the value of St+AH, and if it rises above this value for a time longer than Ad, the high temperature alarm HI is activated. The high temperature alarm HI ceases automatically when the probe reading falls below St+AH-A0.

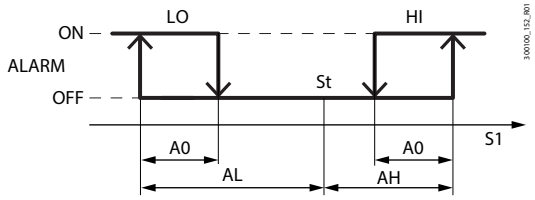


Fig. 10.b

| Ref. | Description |
|---|---|
| LO | Low temperature alarm |
| HI | High temperature alarm |
| S1 | Control probe |
| St | Set point |
| AL | Relative low temperature alarm threshold |
| AH | Relative high temperature alarm threshold |
| A0 | Return differential |

### Absolute thresholds

Parameter ALA is used to set the activation threshold for the low temperature alarm LO. The value measured by the control probe is continuously compared against the value of ALA, and if it falls below this value for a time longer than Ad, the low temperature alarm LO is activated. The low temperature alarm LO ceases automatically when the temperature rises back above ALA+A0.
Similarly, parameter AHA is used to set the activation threshold for the high temperature alarm HI. The value measured by the control probe is continuously compared against the value of AHA, and if it rises above this value for a time longer than Ad, the high temperature alarm HI is activated.
The high temperature alarm HI ceases automatically when the probe reading falls below AHA-A0.

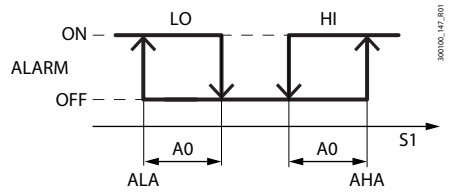


Fig. 10.c

| Ref. | Description |
|---|---|
| LO | Low temperature alarm |
| HI | High temperature alarm |
| S1 | Control probe |
| AL | Low temperature alarm threshold |
| AH | High temperature alarm threshold |
| A0 | Return differential |

The high temperature alarm is ignored during defrosts for a time set by parameter Add after opening the door, and for parameter d8 after defrosting, to avoid false signals. Once the times set by parameter Add or d8 have elapsed, the delay set by parameter Ad starts counting and the alarm is signalled when it elapses.
The active low temperature alarm LO is signalled by the buzzer and the code LO shown on the display, while the active high temperature alarm HI is signalled by the buzzer and the code HI.

## 10.5 HACCP alarms (HACCP = Hazard Analysis and Critical Control Point)

These are specific alarms for controlling the operating temperature, recording any anomalies due to power failures or an increase in the temperature due to other causes (breakages, extreme operating conditions, user errors, etc.); see "HACCP alarm parameters and activating monitoring" for details.
Two types of potentially critical HACCP events are managed:

- type HA alarms, high temperature during operation;
  **Example:** The critical temperature was exceeded, the alarm was not managed and the temperature remained above the threshold for longer than the maximum tolerable time (thresholds defined by site HACCP procedures). The event is critical and potentially hazardous.
- type HF alarms, high temperature after power failure;
  **Example:** The unit was powered off. When restarted, the temperature is above the threshold and does not return to an acceptable level within an appropriate time (parameters defined by site HACCP procedures). The event is critical and potentially hazardous.
  When an alarm occurs, the HACCP icon comes on (if featured), the display shows the alarm code, the alarm is logged and the alarm relay and buzzer are activated.

### 10.5.1 HACCP alarm parameters and activating monitoring

#### Type HA alarms

The type HA alarm is generated if during normal operation the temperature read by the control probe exceeds the high temperature threshold for the time Ad+Htd. Consequently, compared to the normal high temperature alarm already signalled by the controller, the type HA HACCP alarm is delayed by a further time Htd specifically for HACCP recording.

| Par. | Description | Def | Min | Max | UOM | User | User terminal |
|---|---|---|---|---|---|---|---|
| Htd | HACCP alarm delay - 0 = monitoring disabled | 0 | 0 | 240 | min | S | NO |

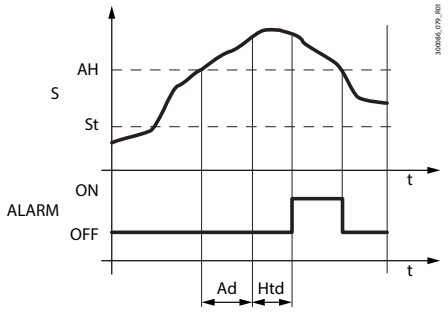


Fig. 10.d

| Ref. | Description |
|---|---|
| S | Control probe |
| St | Set point |
| ALARM | Type HA HACCP alarm |
| Ad | Delay time for high and low temperature alarms |
| AH/AHA | High temperature alarm threshold |
| Htd | HACCP alarm delay - 0 = monitoring disabled |
| t | Time |

| Code | Description | Def | Min | Max | UOM | User | User terminal |
|---|---|---|---|---|---|---|---|
| HAn | Number of type HA alarms (read-only) | 0 | 0 | 6 | - | U | YES |
| HA1, HA2, HA3 (*) | Activation date and time of the first, second and third type HF alarm | ... | ... | ... | - | U | NO |

#### Type HF alarms

The type HF HACCP alarm is generated following a power failure, if when power returns the temperature read by the control probe exceeds the AH high temperature threshold. HFn indicates the number of type HF alarms activated.

| Par. | Description | Def. | Min | Max | UOM | User | User terminal |
|---|---|---|---|---|---|---|---|
| HFn | Number of type HF alarms (read-only) | 0 | 0 | 6 | - | U | YES |
| HF1, HF2, HF3 (*) | Activation date and time of the first, second and third type HF alarm | ... | ... | ... | - | U | NO |

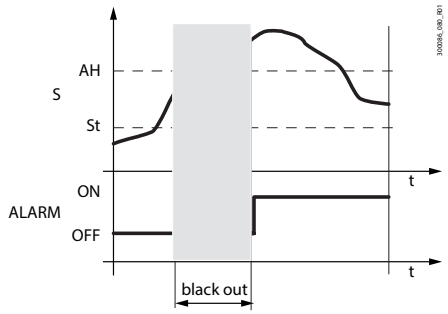


Fig. 10.e

| Ref. | Description |
|---|---|
| S | Control probe |
| St | Set point |
| ALARM | Type HF HACCP alarm |
| AH/AHA | High temperature alarm threshold |
| t | Time |

(*) Parameters visible in APPLICA.

The HA and HF alarm signals can be reset using the alarm reset parameter rSA.
The HACCP event log can be deleted using parameter rHP, from the Applica Desktop configuration software or in the Applica app (Bluetooth™ connection only).

**Notice:** deleting the HACCP event log is irreversible.

## 10.6 Dirty condenser alarm

If the condensing temperature probe is fitted, the iJW controller can monitor the reading so as to signal a dirty condenser alarm.

| Par. | Description | Def. | Min | Max | UOM | User | User terminal |
|---|---|---|---|---|---|---|---|
| /Fo | Assign condensing temperature probe:<br>0 disabled<br>1 S1<br>2 S2<br>3 S3<br>4 S4<br>5 reserved<br>6 6 = Not available<br>7 7 = Not available | 0 | 0 | 7 | - | S | NO |
| Ac | Dirty condenser alarm threshold | 70/158 | 0/32 | 250/482 | °C/°F | S | NO |
| AE | Dirty condenser alarm differential | 5/9 | 0.1/0.2 | 20/36 | Δ °C/ °F | S | NO |
| ACd | Dirty condenser alarm delay | 0 | 0 | 240 | min | S | NO |

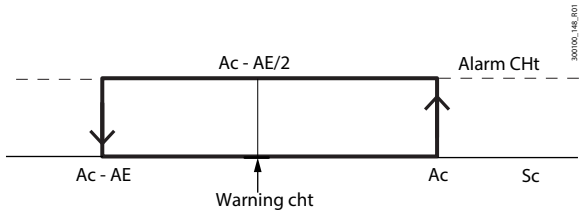


| Ref. | Description |
|---|---|
| Sc | Condensing temperature probe reading |
| Ac | Dirty condenser alarm threshold |
| AE | Dirty condenser alarm differential |
| ACd | Dirty condenser alarm delay |
| cht | Dirty condenser warning |
| CHt | Dirty condenser alarm |

Fig. 10.f

When the temperature Ac-AE/2 is exceeded, warning cht is generated to signal that the condenser is possibly obstructed. If the temperature subsequently returns below Ac-AE, the warning ceases automatically. If on the other hand the condensing temperature rises above the alarm threshold Ac for a time greater than the value set for parameter Acd, alarm CHt is generated and the compressor is stopped. Alarm CHt is reset manually; this is done
by setting parameter rSA.

## 10.7 Frost protection alarm

If the frost protection temperature probe is fitted, the iJW controller can manage the frost protection alarm.

| Par. | Description | Def. | Min | Max | UOM | User | User terminal |
|---|---|---|---|---|---|---|---|
| /Fq | Assign frost protection probe:<br>0 disabled<br>1 S1<br>2 S2<br>3 S3<br>4 S4<br>5 reserved<br>6 6 = Not available<br>7 7 = Not available | 0 | 7 | 1 | - | S | NO |
| AF | Frost protection alarm threshold | -5/-9 | -50/-58 | 250/392 | °C/°F | S | NO |
| AFd | Frost protection alarm delay | 1 | 0 | 15 | min | S | NO |

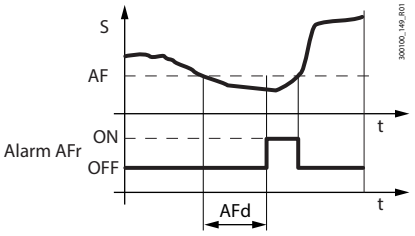


| Ref. | Description |
|---|---|
| t | Time |
| AF | Frost protection alarm threshold |
| AFd | Frost protection alarm delay |
| AFr | Frost protection alarm |
| S | Frost protection temperature |

Fig. 10.g

When the frost protection temperature falls below the alarm threshold AF for a time greater than the value set for parameter AFd, alarm Afr is generated and the compressor is stopped. Alarm Afr is reset automatically when the temperature rises above the threshold Af.

## 10.8 Refrigerant leak alarm rSF

The iJW controller manages an algorithm that checks if the temperature decreases after the compressor is switched on; if the temperature does not decrease sufficiently, the controller attempts to perform a number of defrosts. If even after defrosting the temperature still does not fall, it is assumed that there has been a refrigerant leak and manual-reset alarm rSF is generated, which stops the unit.

| Code | Description | Def. | Min | Max | UOM | User | User terminal |
|---|---|---|---|---|---|---|---|
| d20 | Sampling time for alarm rSF | 0 | 0 | 240 | min | S | NO |
| d16 | Time with no temperature decrease before starting defrost | 30 | Add | 240 | min | S | NO |
| d21 | Number of defrosts allowed before signalling alarm rSF | 2 | 1 | 5 | - | S | NO |
| d22 | Temperature difference to verify decrease | 0.1/0.2 | 0.1/0.2 | 0.5/0.9 | Δ °C/°F | S | NO |

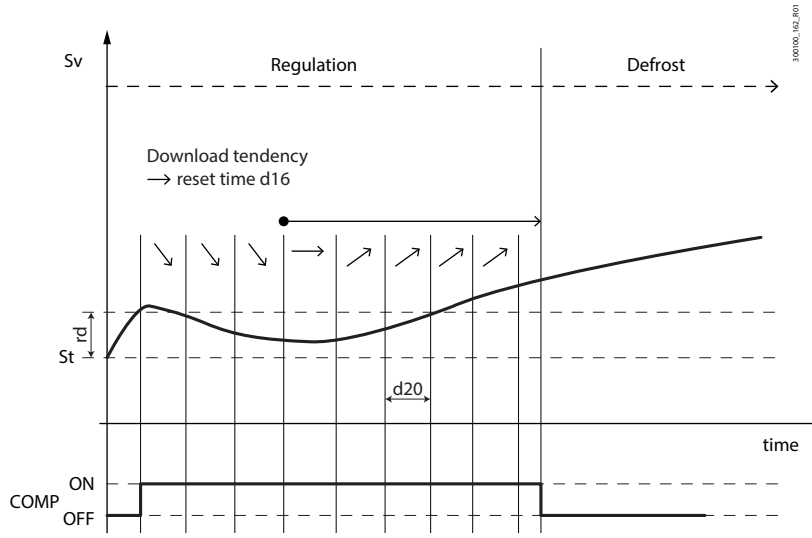


| Ref. | Description |
|---|---|
| Sv | Control probe |
| St | Control set point |
| rd | Control differential |
| d16 | Time with no temperature decrease before starting defrosting |
| d20 | Sampling time for alarm rSF |
| t | Time |

Fig. 10.h

After switching on the compressor, the iJW controller checks at the intervals set for d20 that the control temperature falls by at least by the value set for parameter d22; at the end of each interval, if the temperature decreases, the time with no temperature decrease is reset; on the other hand, if the temperature remains constant or increases, the controller starts counting the time with no temperature decrease, and on reaching the threshold set by parameter d16, a defrost is started. This operating cycle is repeated for a maximum number of defrosts set by parameter d21, after which alarm rSF is activated and the unit is switched off. Alarm rSF is reset manually using parameter rSA.

## 10.9 Maintenance alarm

The iJW controller can count the time that elapses since maintenance was last carried out, and signal a maintenance request alarm.

| Code | Description | Def | Min | Max | UOM | User | User terminal |
|---|---|---|---|---|---|---|---|
| HMP | Operating hour threshold for maintenance alarm hx1000 | 0 | 0 | 45 | hours/ 1000 | S | NO |
| HMr | Reset operating hours | 0 | 0 | 1 | - | S | NO |

If the RTC clock is available and working correctly, the iJW controller can count the number of hours that have elapsed since the last time the operating hours were reset. When the threshold set by parameter HMP is exceeded, the maintenance request alarm SrC is signalled. Alarm SrC is reset manually by resetting the operating hours using parameter HMr. Parameter HMr can be used to reset the count of operating hours since maintenance was last carried out even if the alarm has not been activated. If the operating hour threshold HMP=0 (default), the alarm is disabled.

**Notice:** the maintenance alarm can only be activated on models fitted with RTC and with the clock set correctly.

# 11. LOGS

The iJW controller can record both periodic and event logs, which can then be viewed and downloaded using the Applica app and commissioning tools. To view the logs from Applica, select Service Area -> Trend -> (tab) Logs for the periodic logs, or Service Area -> Trend -> (tab) Events for event logs:

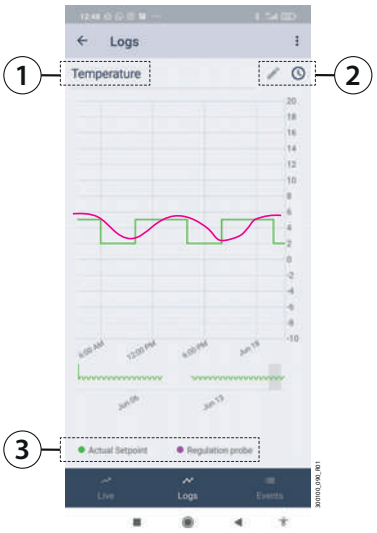


Fig. 11.a

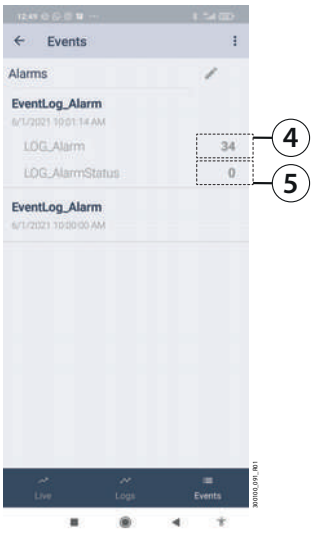


Fig. 11.b

| Ref. | Description |
|---|---|
| 1 | Preset |
| 2 | Display editing tools |
| 3 | Periodically logged variables |
| 4 | Alarm code (See the Alarm table) |
| 5 | Alarm status (0= not active; 1 = active) |

The log view is pre-set, however it can be changed using the editing tools. In addition, the pre-set views loaded on the device allow the main values to be filtered (temperature, HACCP alarms, blackouts, etc.). To download the logs, use the drop-down menu at the top right.

## 11.1 Periodic logs

The periodic logs record the main values at regular intervals, as shown in the table.

| Logged value | UOM | Period |
|---|---|---|
| Control temperature | °C/°F | 5 min |
| Current temperature set point. | °C/°F | 1 h |
| Current humidity | % rh | 1 h |
| Current humidity set point | % rh | 1 h |
| Maximum temperature in the period | °C/°F | 1 h |
| Minimum temperature in the period | °C/°F | 1 h |
| Current evaporation temperature | °C/°F | 1 h |
| Current condensing temperature | °C/°F | 1 h |
| Compressor, minutes ON in the period | min | 1 h |
| Compressor, starts in the period | - | 1 h |
| Evaporator fan, minutes ON in the period | min | 1 h |
| Lights, minutes ON in the period | min | 1 h |
| Defrost, minutes ON in the period | min | 1 h |
| Low temperature alarm relative threshold | Δ °C/°F | 1 h |
| Low temperature alarm relative threshold | Δ °C/°F | 1 h |

Tab. 11.a

## 11.2 Event logs

Event logs are recorded when specific conditions occur, and can be used to store certain related values, as shown in the table.

| Logged value | Event | Other recorded values | Number of samples (*) | Limits |
|---|---|---|---|---|
| Alarm | Alarm activation | Number of the active alarm with highest priority. Alarm status (active/ceased) | 100 | max 255 (Notice 2) |
| Blackout | Device ON | Power failure duration in minutes | 100 | 1000 hours |
| HACCP alarms | HA or HF alarm | Type HA or HF alarm | 50 | - |

Tab. 11.b

(*) The samples are stored in a circular FIFO list (e.g. for the alarms, the 21st alarm overwrites the 1st alarm, and so on).

The type of alarm recorded in the log can be identified using the alarm code (see the Alarm table).

⚠ changing the time set on the **iJW** controller by more than 140 minutes will clear the stored logs.

# 12. APPENDIX

## 12.1 ir33 and IJ parameter compatibility table

The table below shows the parameters from the Carel PJ and IR33 platforms that have changed name or function in the IJ platform. The parameters not listed in this chapter have retained the same name and the same function.

| ir33 | iJ | Description | Default | Min | Max | UOM |
|---|---|---|---|---|---|---|
| AF | - | Not present | - | - | - | - |
| AP | - | Not present | - | - | - | - |
| Apd | - | Not present | - | - | - | - |
| H6 | - | Not present | - | - | - | - |
| H9 | - | Not present | - | - | - | - |
| /c1, /c2, /c3, /c4, /c5 | /cA | Outlet temperature probe (Sm) calibration | 0 | -20/ -36 | 20/ 36 | Δ °C/ °F |
| | /cb | Defrost temperature probe (Sd) calibration | 0 | -20/ -36 | 20/ 36 | Δ °C/ °F |
| | /cc | Intake temperature probe (Sr) calibration | 0 | -20/ -36 | 20/ 36 | Δ °C/ °F |
| | /cF | Auxiliary evaporator defrost temperature probe (Sd2) calibration | 0 | -20/ -36 | 20/ 36 | Δ °C/ °F |
| | /cg | Auxiliary temperature probe 1 calibration | 0 | -20/ -36 | 20/ 36 | Δ °C/ °F |
| | /cH | Auxiliary temperature probe 2 calibration | 0 | -20/ -36 | 20/ 36 | Δ °C/ °F |
| | /cI | Room temperature probe calibration | 0 | -20/ -36 | 20/ 36 | Δ °C/ °F |
| | /cM | Glass temperature probe calibration | 0 | -20/ -36 | 20/ 36 | Δ °C/ °F |
| | /co | Condensing temperature probe calibration | 0 | -20/ -36 | 20/ 36 | Δ °C/ °F |
| | /cp | Humidity probe calibration | 0 | -20/ -36 | 20/ 36 | Δ °C/ °F |
| | /cq | Frost protection temperature probe calibration | 0 | -20/ -36 | 20/ 36 | Δ °C/ °F |
| | /cr | Product temperature probe calibration | 0 | -20/ -36 | 20/ 36 | Δ °C/ °F |
| /A2, /A3, /A4, /A5 | /FA | Assign outlet temperature probe (Sm)<br>0 = Function disabled<br>1 = Probe S1<br>2 = Probe S2<br>3 = Probe S3<br>4 = Probe S4<br>5 = Reserved<br>6 = Not available<br>7 = Not available | ... | 0 | 7 | - |
| | /Fb | Assign defrost temperature probe (Sd) - see /FA | ... | 0 | 7 | - |
| | /Fc | Assign intake temperature probe (Sr) - see /FA | ... | 0 | 7 | - |
| | /FF | Assign auxiliary evaporator defrost temperature probe (Sd2) - see /FA | ... | 0 | 7 | - |
| | /FG | Assign auxiliary temperature probe 1 (Saux1) - see /FA | ... | 0 | 7 | - |
| | /FH | Assign auxiliary temperature probe 2 (Saux1) - see /FA | ... | 0 | 7 | - |
| | /FI | Assign ambient temperature probe (SA) - see /FA | ... | 0 | 7 | - |
| | /FM | Assign glass temperature probe (Svt) - see /FA | ... | 0 | 7 | - |
| | /Fo | Assign condensing temperature probe - see /FA | ... | 0 | 7 | - |
| | /FP | Assign humidity probe (fixed on S5) | ... | 5 | 5 | - |
| | /Fq | Assign frost protection temperature probe - see /FA | ... | 0 | 7 | - |
| | /FR | Assign product temperature probe - see /FA | ... | 0 | 7 | - |
| H2 | /nE | Enable user terminal navigation:<br>0= enabled;<br>1 = disabled<br>2 = Remote ON/OFF<br>3 = On/Off and access to set point disabled. | 0 | 0 | 3 | - |
| /P | /P1 | Configuration of probes S1, S2, S3, S4, B5<br>0 = PT1000; 1 = PTC; 2 = NTC; 3 = NTC-LT; 4 = NTC-HT. | 2 | 0 | 4 | - |
| | /P2 | Configuration of multifunction input S3/DI1:<br>0, 1, 2, 3, 4 = S3; 5 = DI1. | 5 | 0 | 5 | - |
| /tI | /t1 | Display on user terminal:<br>0 = Not configured<br>1 = value of S1<br>2 = value of S2<br>3 = value of S3<br>4 = value of S4<br>5 = value of S5<br>6 to 8 = not available<br>9 = control probe<br>10 = virtual probe<br>11 to 14 = not available<br>15 = actual control set point | 9 | 0 | 15 | - |
| /tE | /t2 | Display on remote display - see /t1 | 0 | 0 | 15 | - |
| A8 | A3 | Defrost terminated after maximum time signal:<br>0 = disabled; 1 = enabled | 30 | 1 | 240 | min |
| d8d | Add | High temperature alarm bypass time for door open | 5 | 1 | 240 | min |
| ALF | AF | Frost protection alarm threshold | -5/ -9 | -50/ -58 | 200/392 | °C/°F |
| AdF | Afd | Frost protection alarm delay time | 1 | 0 | 15 | min |
| d9 | c7 | Defrost priority over continuous cycle:<br>0 = continuous cycle has priority; 1 = defrost has priority | 0 | 0 | 1 | - |
| cc, cPd | cc | Continuous cycle running time (0 = disabled) | 0 | 0 | 72 | h |
| c7 | cPt | Maximum pump down time (0 = pump down disabled) | 0 | 0 | 900 | s |
| d3 | d15 | Start defrost threshold | 0 | 0 | 240 | min |
| d12 | d7 | Skip defrost: 0 = disabled; 1 = enabled | 0 | 0 | 1 | - |
| A4, A5, A9 | DIA | Assign immediate external alarm digital input:<br>0 = Disabled; 1 = DI1; 2 = DI2; 3, 4 = Not available | ... | 0 | 4 | - |
| | DIb | Assign delayed external alarm digital input - see DIA | ... | 0 | 4 | - |
| | DIc | Assign start defrost digital input - see DIA | ... | 0 | 4 | - |
| | DId | Assign start defrost digital input - see DIA | ... | 0 | 4 | - |
| | DIE | Assign door switch with compressor OFF digital input - see DIA | ... | 0 | 4 | - |
| | DIF | Assign remote ON/OFF digital input - see DIA | ... | 0 | 4 | - |
| | DIG | Assign curtain switch digital input - see DIA | ... | 0 | 4 | - |
| | DIH | Assign start/stop continuous cycle digital input - see DIA | ... | 0 | 4 | - |
| | DIP | Assign door switch without compressor OFF digital input - see DIA | ... | 0 | 4 | - |
| | DIS | Assign generic function alarm digital input logic see DIA | ... | 0 | 4 | - |
| | DIt | Assign low pressure switch digital input see DIA | ... | 0 | 4 | - |
| | DIU | Assign AUX output activation digital input see DIA | ... | 0 | 4 | - |

| ir33 | iJ | Description | Default | Min | Max | UOM |
|---|---|---|---|---|---|---|
| H1, H5 | DOA | Assign solenoid/compressor digital output<br>0 = not configured<br>1 = digital output 1 (NO1)<br>2 = digital output 2 (NO2)<br>3 = digital output 3 (NO3)<br>4 = digital output 4 (NO4)<br>5 = digital output 5 (NO5)<br>6 = digital output 6 (NO6) | ... | 0 | 6 | - |
| | DOb | Assign alarm digital output - see DOA | ... | 0 | 6 | - |
| | DOC | Assign AUX auxiliary digital output - see DOA | ... | 0 | 6 | - |
| | DOE | Assign light digital output - see DOA | ... | 0 | 6 | - |
| | DOG | Assign defrost digital output - see DOA | ... | 0 | 6 | - |
| | DOH | Assign auxiliary evaporator defrost digital output - see DOA | ... | 0 | 6 | - |
| | DOI | Assign evaporator fan digital output - see DOA | ... | 0 | 6 | - |
| | DOj | Assign dehumidification heater digital output - see DOA | ... | 0 | 6 | - |
| | DOk | Assign auxiliary compressor without rotation digital output - see DOA | ... | 0 | 6 | - |
| | DOn | Assign pump down valve digital output - see DOA | ... | 0 | 6 | - |
| | DOP | Assign condensate drain heater digital output - see DOA | ... | 0 | 6 | - |
| | DOQ | Assign anti-sweat heater digital output - see DOA | ... | 0 | 6 | - |
| | DOS | Assign generic On/Off function digital output - see DOA | ... | 0 | 6 | - |
| | DOt | Assign condenser fan digital output - see DOA | ... | 0 | 6 | - |
| | DOu | Assign humidification digital output - see DOA | ... | 0 | 6 | - |
| | DOv | Assign reverse digital output with dead band control - see DOA | ... | 0 | 6 | - |
| | DOw | Assign auxiliary parallel compressor digital output - see DOA | ... | 0 | 6 | - |
| | DOx | Assign gasket heater digital output - see DOA | ... | 0 | 6 | - |
| | DOy | Assign auxiliary compressor with rotation digital output - see DOA | ... | 0 | 6 | - |
| | DOz | Assign external dehumidifier digital output - see DOA | ... | 0 | 6 | - |
| F5 | F5d | Condenser fan activation differential | 5/ 9 | 0.1/ 0.2 | 60/ 108 | °C/°F |
| Ado | H14 | Time light stays on after closing the door | 0 | 0 | 240 | min |
| H4 | Hb | Buzzer: 0 = disabled; 1 = enabled | 1 | 0 | 1 | - |
| HF | HF1 | Activation date and time of the first, second and third type HF alarm | ... | ... | ... | - |
| Hdn | IS | Configuration to be loaded (0 = no configuration selected) | 0 | 0 | ... | - |
| Pw | PDS | Service password | 22 | 0 | 999 | - |
| | | | | | | |
| r3 | r30 | Control mode: 0 = direct with defrost; 1 = direct; 2 = reverse | 0 | 0 | 2 | - |
| tof_d_ | tE1- d, …, tE8-d | End time band 1 to 8 - day, see (td1...8-d) | 0 | 0 | 11 | - |
| tof_h_ | tE1-hh, …, tE8-hh | End time band 1 to 8 - hours | 0 | 0 | 23 | hours |
| tof_m_ | tE1-mm, …, tE8- mm | End time band 1 to 8 - minutes | 0 | 0 | 59 | minutes |
| toF | tE1- time, …, tE8- time | End time band 1 to 8 (Applica) | 00:00:00 | 00:00:00 | 23:59:59 | - |
| ton_d_ | tS1- d, …, tS8-d | Start time band 1 to 8 - day, see (td1...8-d) | 0 | 0 | 11 | - |
| ton_h_ | tS1-hh, …, tS8-hh | Start time band 1 to 8 - hours | 0 | 0 | 23 | hours |
| ton_m__ | tS1- mm, …, tS8-mm | Start time band 1 to 8 - minutes | 0 | 0 | 59 | minutes |
| ton | tS1- time, …, tS8- mm | Start time band 1 to 8 (Applica) | 00:00:00 | 00:00:00 | 23:59:59 | - |

Tab. 12.a

## 12.2 Input/output configuration procedure

The inputs and outputs can be configured in the Applica app or Applica Desktop configuration software by setting the corresponding parameters.




Fig. 12.a




Fig. 12.b

Procedure:

1. open Applica on the smartphone;
2. access the controller via NFC or Bluetooth™, entering the profile credentials;
3. move the device closer to the iJW to modify the input/output configuration on (NFC connection only);
4. access Service Area-> I/O;
5. Select the Inputs or Outputs tab;
6. Select the modification tool corresponding to the group of inputs/outputs to be modified;
7. the example in the figure shows the defrost probe assignment) and set the input/output to be associated with the function; press OK to confirm;
8. Select "Write" from the drop-down menu at the top right, move the device closer to the iJW and tap "Applica" (NFC connection only).

### Analogue inputs

| Code | Description | Def | Min | Max | UOM | User | User term. |
|---|---|---|---|---|---|---|---|
| /P1 | Configuration of probes S1, S2, S3, S4, B5<br>0 = PT1000; 1 = PTC; 2 = NTC; 3 = NTC-LT; 4 = NTC-HT | 2 | 0 | 4 | - | S | NO |
| /P2 | Configuration of multifunction input S3/ DI1: 0, 1, 2, 3, 4 = S3; 5 = DI1 | 5 | 0 | 5 | - | S | NO |
| /FA | Assign outlet temperature probe (Sm)<br>0 = Function disabled<br>1 = Probe S1<br>2 = Probe S2<br>3 = Probe S3<br>4 = Probe S4<br>5 = Reserved<br>6 = Not available<br>7 = Not available | 1 | 0 | 7 | - | S | NO |
| /Fb | Assign defrost temperature probe (Sd) - see /FA | 0 | 0 | 7 | - | S | NO |
| /Fc | Assign intake temperature probe (Sr) - see /FA | 0 | 0 | 7 | - | S | NO |
| /FF | Assign auxiliary evaporator defrost temperature probe (Sd2) - see /FA | ... | 0 | 7 | - | S | NO |
| /FG | Assign auxiliary temperature probe 1 (Saux1) - see /FA | ... | 0 | 7 | - | S | NO |
| /FH | Assign auxiliary temperature probe 2 (Saux1) - see /FA | ... | 0 | 7 | - | S | NO |
| /FI | Assign ambient temperature probe (SA) - see /FA | ... | 0 | 7 | - | S | NO |
| /FM | Assign glass temperature probe (Svt) - see /FA | ... | 0 | 7 | - | S | NO |
| /Fo | Assign condensing temperature probe - see /FA | ... | 0 | 7 | - | S | NO |
| /FP | Assign humidity probe (fixed on S5) | ... | 5 | 5 | - | S | NO |
| /Fq | Assign frost protection temperature probe - see /FA | ... | 0 | 7 | - | S | NO |
| /FR | Assign product temperature probe - see /FA | ... | 0 | 7 | - | S | NO |

To set the type of probe, use parameter /P1.

### Digital inputs

| Code | Description | Def | Min | Max | UOM | User | User term. |
|---|---|---|---|---|---|---|---|
| DIA | Assign immediate external alarm digital input:<br>0 = Disabled; 1 = DI1; 2 = DI2; 3, 4 = Not available | ... | 0 | 4 | - | S | NO |
| DIb | Assign delayed external alarm digital input - see DIA | ... | 0 | 4 | - | S | NO |
| DIc | Assign enable defrost digital input - see DIA | ... | 0 | 4 | - | S | NO |
| DId | Assign start defrost digital input - see DIA | ... | 0 | 4 | - | S | NO |
| DIE | Assign door switch with compressor OFF<br>compressore - Vedere DIA | ... | | | | S | |
| DIF | Assign remote ON/OFF digital input - see DIA | ... | | | | S | |
| DIG | Assign curtain switch digital input - see DIA | ... | 0 | 4 | - | S | NO |
| DIH | Assign start/stop continuous cycle digital input - see DIA | ... | 0 | 4 | - | S | NO |
| DIP | Assign door switch without compressor OFF<br>compressore - Vedere DIA | ... | 0 | 4 | - | S | NO |
| DIS | Assign generic function alarm digital input logic - see DIA | ... | 0 | 4 | - | S | NO |
| DIt | Assign low pressure switch digital input - see DIA | ... | 0 | 4 | - | S | NO |
| DIU | Assign AUX output activation digital input - see DIA | ... | 0 | 4 | - | S | NO |

### Digital outputs

| Code | Description | Def | Min | Max | UOM | User | User term. |
|---|---|---|---|---|---|---|---|
| DOA | Assign solenoid/compressor digital output<br>0 = not configured<br>1 = digital output 1 (NO1)<br>2 = digital output 2 (NO2)<br>3 = digital output 3 (NO3)<br>4 = digital output 4 (NO4)<br>5 = digital output 5 (NO5)<br>6 = digital output 6 (NO6) | (***) | 0 | 6 | - | S | NO |
| DOb | Assign alarm digital output - see DOA | (***) | 0 | 6 | - | S | NO |
| DOC | Assign AUX auxiliary digital output - see DOA | (***) | 0 | 6 | - | S | NO |
| DOE | Assign light digital output - see DOA | (***) | 0 | 6 | - | S | NO |
| DOG | Assign defrost digital output - see DOA | (***) | 0 | 6 | - | S | NO |
| DOH | Assign auxiliary evaporator defrost digital output - see DOA | (***) | 0 | 6 | - | S | NO |
| DOI | Assign evaporator fan digital output - see DOA | (***) | 0 | 6 | - | S | NO |
| DOj | Assign dehumidification heater digital output - see DOA | (***) | 0 | 6 | - | S | NO |
| DOk | Assign auxiliary compressor without rotation digital output - see DOA | (***) | 0 | 6 | - | S | NO |
| DOn | Assign pump down valve digital output - see DOA | (***) | 0 | 6 | - | S | NO |
| DOP | Assign drain heater digital output - see DOA | (***) | 0 | 6 | - | S | NO |
| DOQ | Assign anti-sweat heater digital output - see DOA | (***) | 0 | 6 | - | S | NO |
| DOS | Assign generic On/Off function digital output - see DOA | (***) | 0 | 6 | - | S | NO |
| DOt | Assign condenser fan digital output - see DOA | (***) | 0 | 6 | - | S | NO |
| DOu | Assign humidification digital output - see DOA | (***) | 0 | 6 | - | S | NO |
| DOv | Assign reverse digital output with dead band control - see DOA | (***) | 0 | 6 | - | S | NO |
| DOw | Assign auxiliary parallel compressor digital output - see DOA | (***) | 0 | 6 | - | S | NO |
| DOx | Assign gasket heater digital output - see DOA | (***) | 0 | 6 | - | S | NO |
| DOy | Assign auxiliary compressor with rotation digital output - see DOA | (***) | 0 | 6 | - | S | NO |
| DOz | Assign external dehumidifier digital output - see DOA | (***) | 0 | 6 | - | S | NO |

## 12.3 Setting the default parameters/loading the parameter sets

The working set contains the group of parameters used by the iJW controller during normal operation. This set is loaded whenever the iJW controller is started, and the parameters can be modified at any time from the terminal, supervisor, Applica app and Applica Desktop configuration software. This set of parameters, customised by the user to control their refrigeration system, can be saved in a configuration using Applica. Subsequently the configuration can be retrieved and loaded onto the controller again using Applica. iJW also stores a default parameter set in its memory; this set can never be overwritten, being stored in a non-modifiable memory area. The default configuration can be loaded to restore the system to factory conditions.
In addition, various parameter configurations are pre-loaded on the iJW in the internal memory of the device, which can be copied to the working set if desired, see the paragraph "List of available configurations and relative connections". A specific parameter can therefore be set to apply the different configurations directly from the terminal or in Applica.

### 12.3.1 Procedure for setting the default parameters/loading the parameter sets

| Par. | Description | Def. | Min. | Max. | UOM | User | User term. |
|---|---|---|---|---|---|---|---|
| IS | Working configuration | 0 | 0 | IS_Max | - | S | YES |
| IS_max | Number of embedded configurations | 0 | 0 | 999 | - | S | NO |
| rSC | Restore default values | 0 | 0 | 1 | - | S | YES |

User terminal (see "User interface" for details)

Procedure:
1. enter the parameter setting menu;
2. use the UP and DOWN buttons to scroll the submenus until selecting "CtI";
3. use the UP and DOWN buttons to scroll the parameters until selecting "rSC" to restore the Carel default values, or "IS" to load one of the parameter sets available on the controller;
4. to reset the parameters to the default values, after having selected parameter "rSC", press UP/DOWN to set the value 1 and confirm by pressing PROGRAM;
5. to load one of the parameter sets available on the controller, after selecting parameter "IS", press UP/DOWN to choose the value corresponding to the parameter set to be loaded as the working set, and confirm by pressing PROGRAM.

Applica

Procedure:
1. open Applica on the smartphone;
2. access the controller via NFC or Bluetooth™, entering your profile credentials;
3. scroll to parameter "rSC" (if enabled in the access profile) to restore the Carel default values, or "IS" to load one of the parameter sets available on the controller;
4. set parameter "rSC" or "IS" and confirm.

**Notice:** the visibility of parameters "rSC" and "IS" depends on the access profile used and whether or not there are any embedded configurations, respectively.

Applying a configuration means copying the set values of the configuration parameters to the working parameters. Any empty parameters (parameters without values set in that configuration) will remain unaffected. The copy procedure is started by changing the value of parameter IS.
Once the configuration has been applied, the value of any of the parameters can be modified without affecting the configuration loaded on the controller, which can thus be recalled at any time, firstly setting the corresponding parameter to 0 and then to the value associated with the desired configuration.

**Notice:**
- the parameters contained in a configuration cannot be modified in any way.
- Any parameters that are not included in the configuration will remain unchanged, even if the configuration used is changed.
- Recalling the factory parameters resets the settings without however changing the configurations.

## 12.4 Copy configuration parameters

To simplify operations in the field, Applica includes a "Clone" feature to acquire the configuration from one iJW and replicate it on other controllers.

Procedure:
1. open Applica on the smartphone;
2. access the controller via NFC or Bluetooth™, entering the profile credentials;
3. follow the path "Configurations/Clone";
4. move the smartphone closer to the iJW controller to acquire the configuration from (NFC connection only);
5. following the acknowledgement message, move the smartphone closer to the iJW controller to apply the same configuration to (NFC connection only);
6. wait for the cloning confirmation message to be shown.

**Notice:** cloning copies all of the parameters, even those not visible to the user based on the access profile. On the other hand, to copy only the parameters that are visible to the user, use the "Create configuration" option, accessible from Service Area -> Setup -> Parameter list.

## 12.5 List of available configurations and related connections

### 12.5.1 Configurations with 2 relays

201 - Compressor

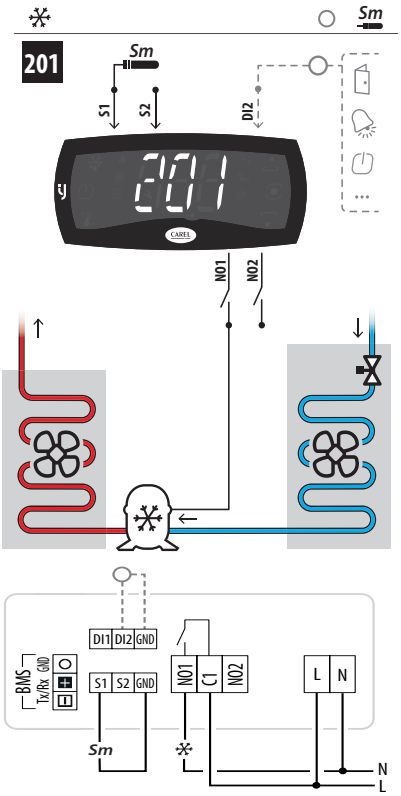


Fig. 12.c

202 - Compressor - Heater

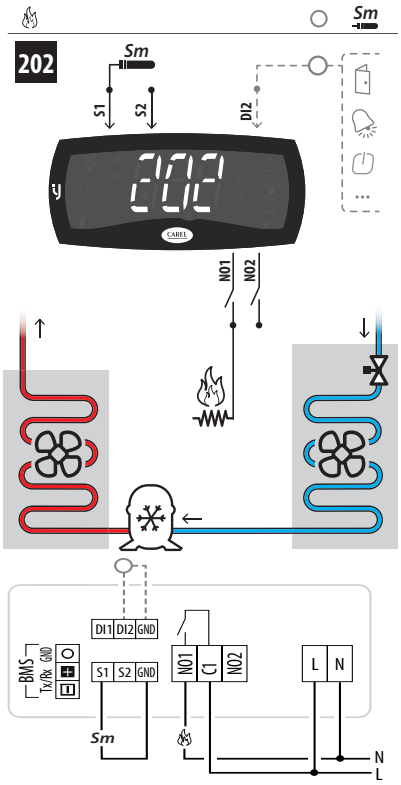


Fig. 12.d

Default controller configuration

203 - Compressor - Fan

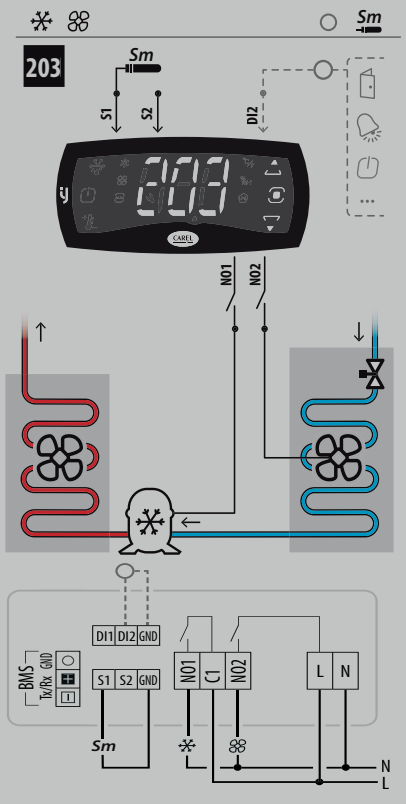


Fig. 12.e

204 - Compressor - Defrost

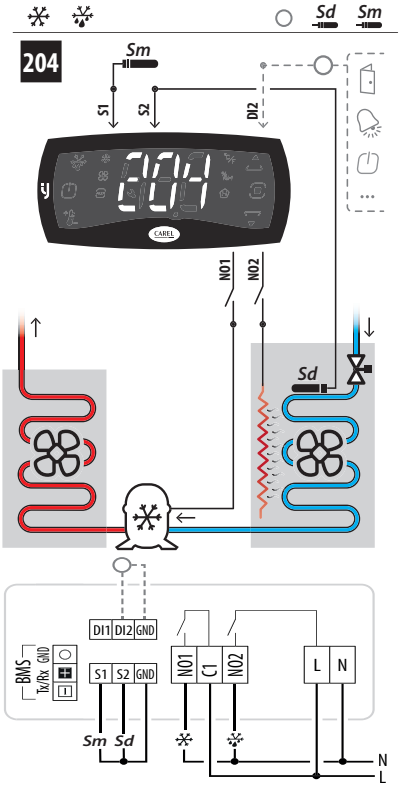


Fig. 12.f

205 - Compressor - Alarm

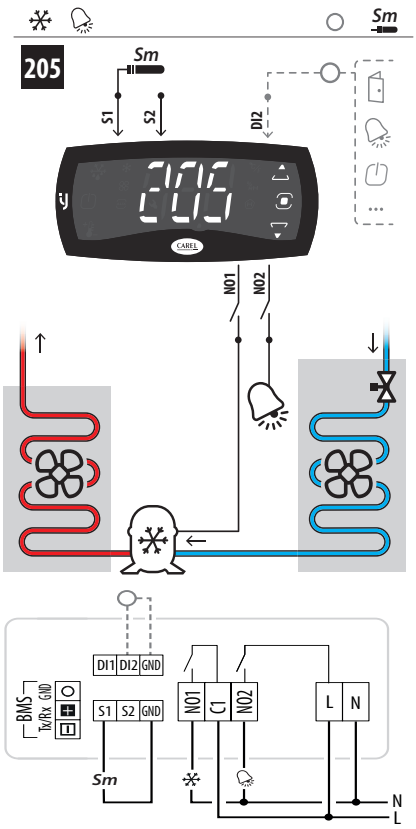


Fig. 12.g

206 - Compressor - Light

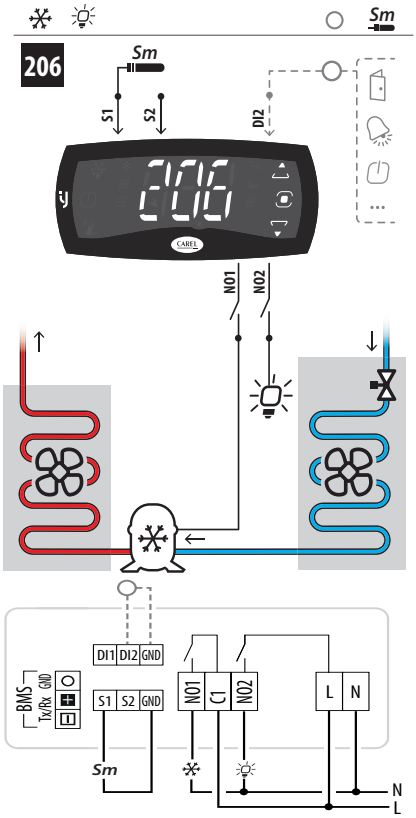


Fig. 12.h

207 - Compressor - Heater

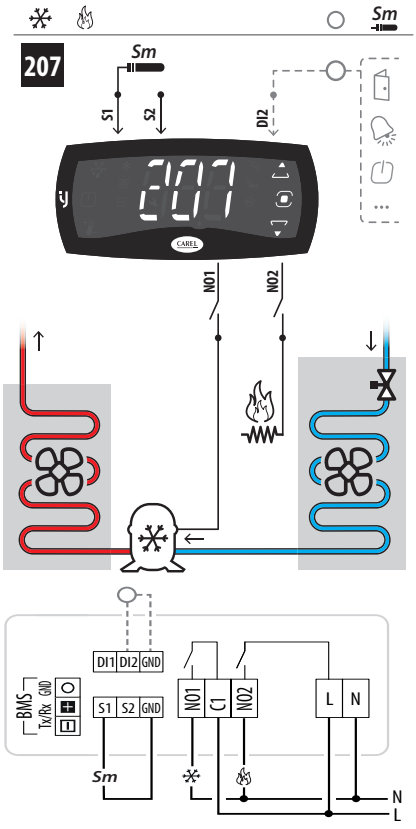


Fig. 12.i

208 - Heater - Fan

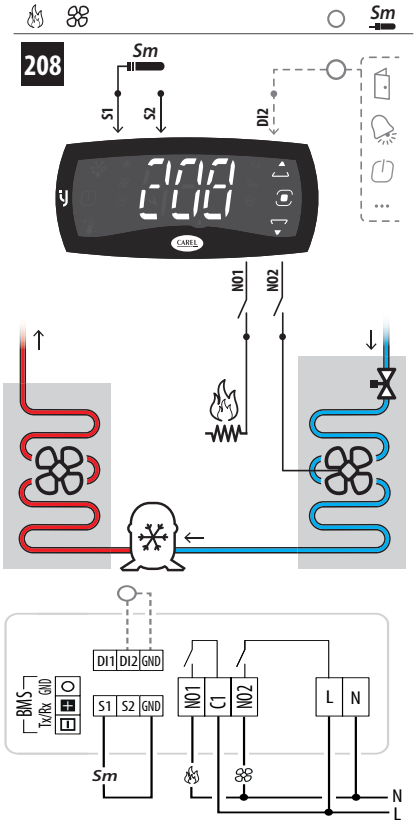


Fig. 12.j

209 - Heater - Alarm

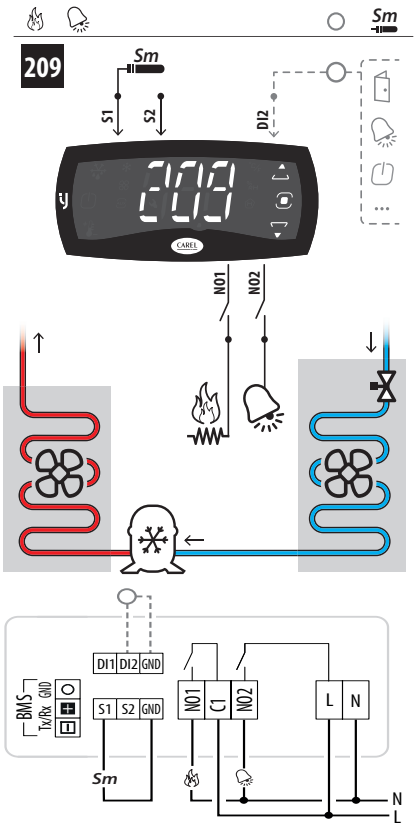


Fig. 12.k

210 - Compressor 77- Defrost - Virtual probe

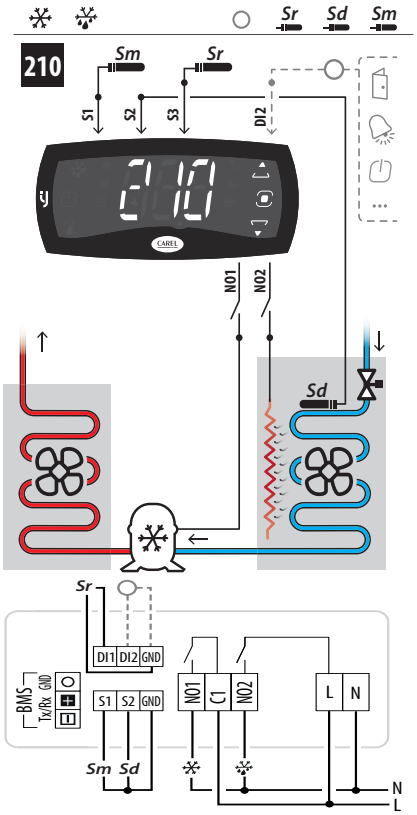


Fig. 12.l

## Parameters list of configurations with 2 relays

When choosing a configuration, the parameters shown in the table are automatically set.

| Par. | Description | Configuration | | | | | | | | | |
|---|---|---|---|---|---|---|---|---|---|---|---|
| | | 201 | 202 | 203 | 204 | 205 | 206 | 207 | 208 | 209 | 210 |
| /FA | Assign outlet temperature probe Sm | 1 | 1 | 1 | 1 | 1 | 1 | 1 | 1 | 1 | 1 |
| /Fb | Assign defrost temperature probe Sd | 0 | 0 | 0 | 2 | 0 | 0 | 0 | 0 | 0 | 2 |
| /Fc | Assign intake temperature probe Sr | 0 | 0 | 0 | 0 | 0 | 0 | 0 | 0 | 0 | 3 |
| DOA | Assign solenoid/compressor digital output | 1 | 0 | 1 | 1 | 1 | 1 | 1 | 0 | 0 | 1 |
| DOb | Assign alarm digital output | 0 | 0 | 0 | 0 | 2 | 0 | 0 | 0 | 2 | 0 |
| DOE | Assign light digital output | 0 | 0 | 0 | 0 | 0 | 2 | 0 | 0 | 0 | 0 |
| DOG | Assign defrost digital output | 0 | 0 | 0 | 2 | 0 | 0 | 0 | 0 | 0 | 2 |
| DOI | Assign evaporator fan digital output | 0 | 0 | 2 | 0 | 0 | 0 | 0 | 2 | 0 | 0 |
| DOv | Assign reverse digital output with dead band control | 0 | 1 | 0 | 0 | 0 | 0 | 2 | 2 | 1 | 0 |
| GF2 | Custom function associated with the DOWN arrow | 0 | 0 | 0 | 0 | 0 | 1 | 0 | 0 | 0 | 0 |
| /P2 | Configuration of multifunction input S3/ DI | 5 | 5 | 5 | 5 | 5 | 5 | 5 | 5 | 5 | 3 |

Tab. 12.b

## 12.5.2 Configurations with 4 relays

403 - Compressor - Fan

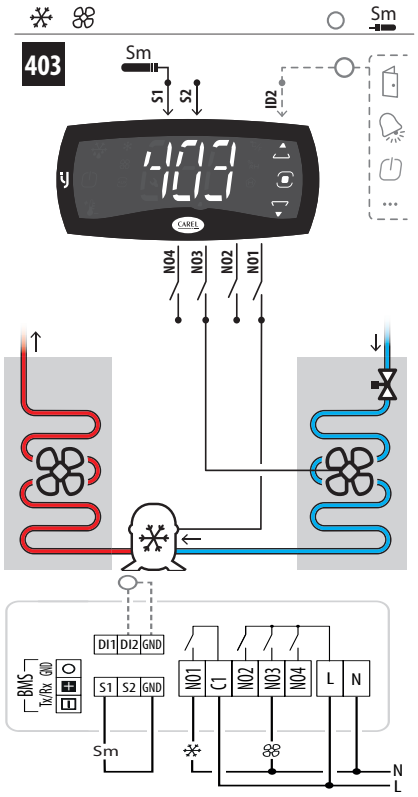


Fig. 12.m

404 - Compressor - Defrost

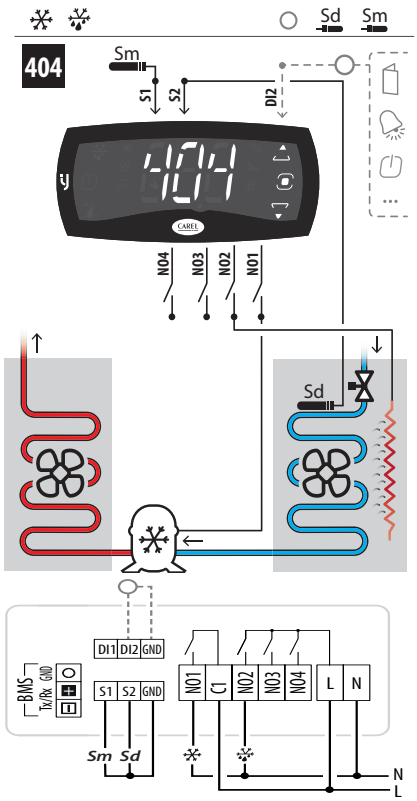


Fig. 12.n

405 - Compressor - Alarm

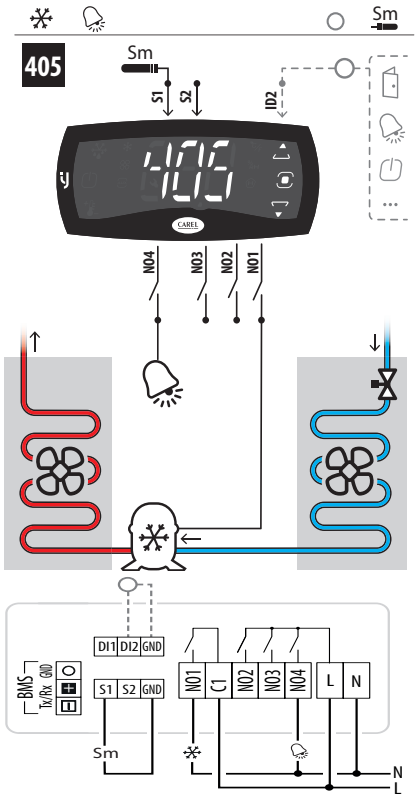


Fig. 12.o

406 - Compressor - Light

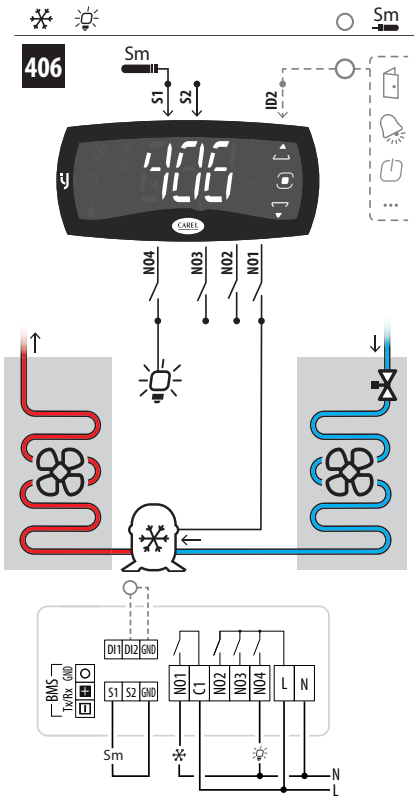


Fig. 12.p

407 - Compressor - Heater

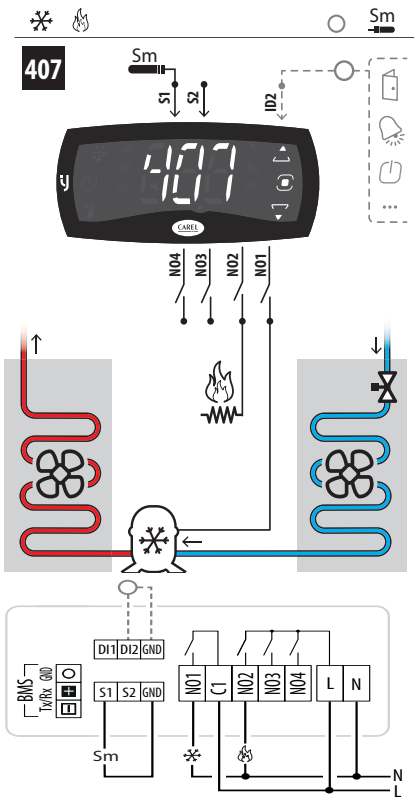


Fig. 12.q

408 - Heater - Fan

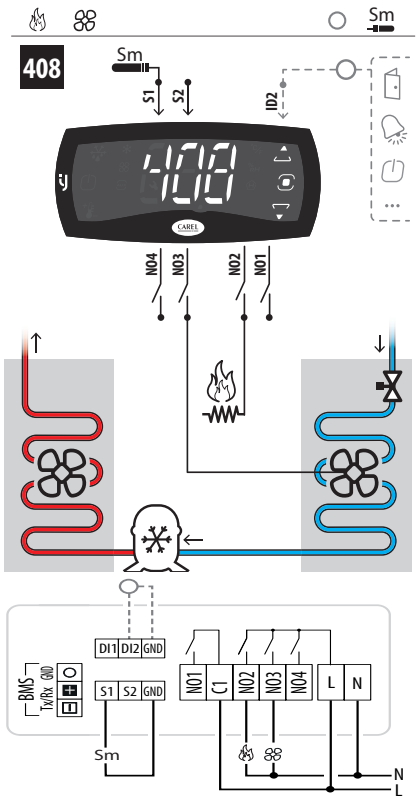


Fig. 12.r

409 - Heater - Alarm

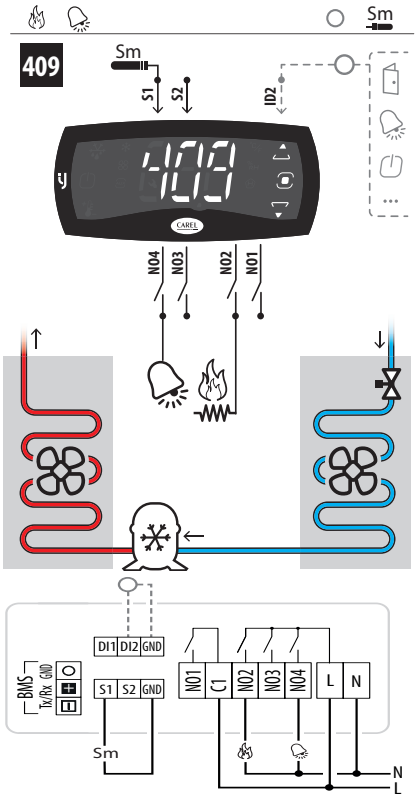


Fig. 12.s

411 - Compressor - Humidifier

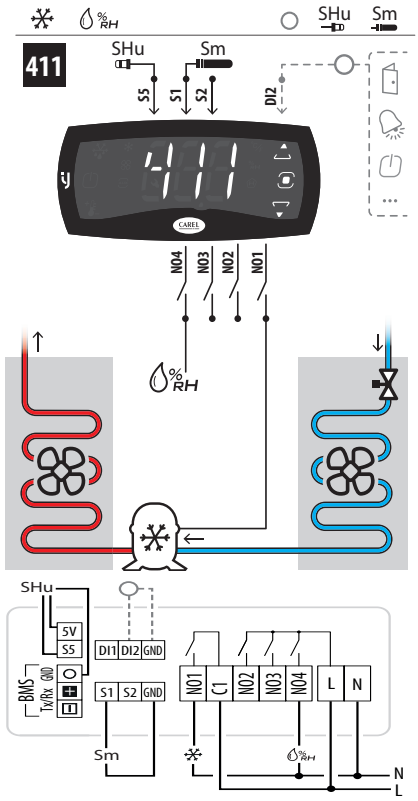


Fig. 12.t

## Default controller configuration

416 - Compressor - Defrost - Fan

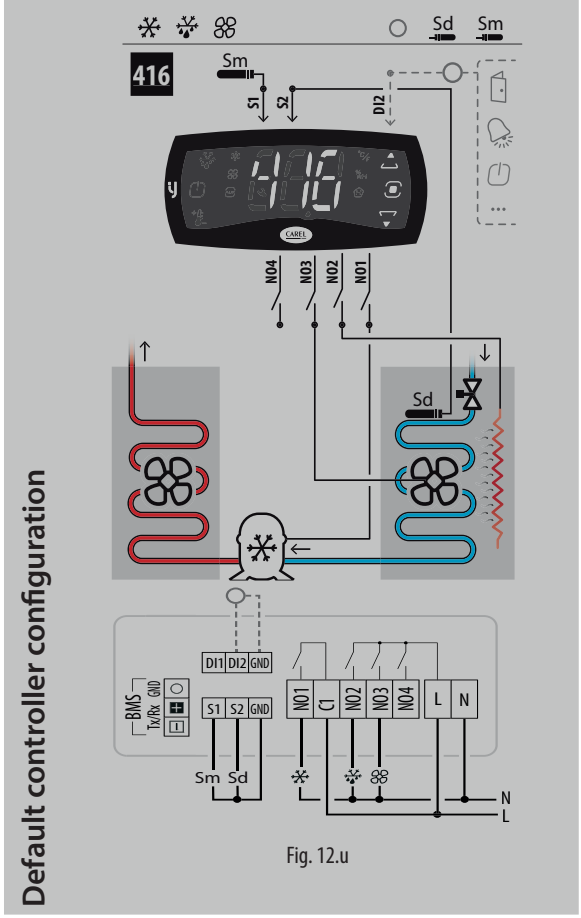


Fig. 12.u

417 - Compressor - Fan - Alarm

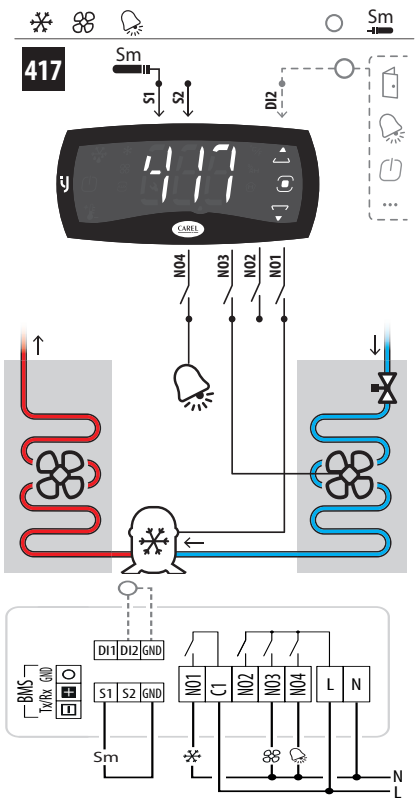


Fig. 12.v

418 - Compressor - Fan - Light

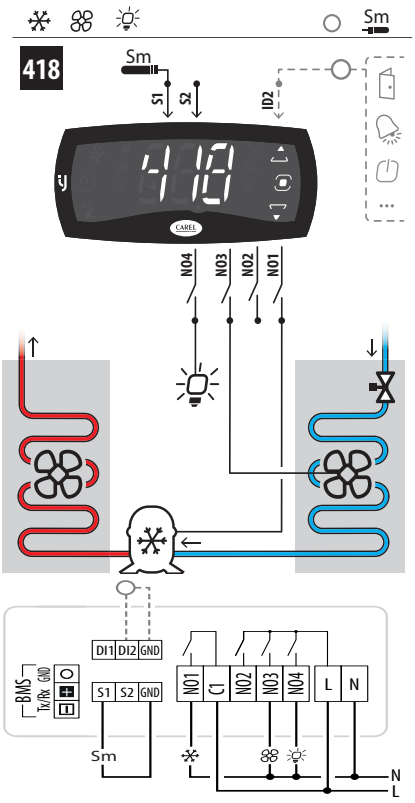


Fig. 12.w

419 - Compressor - Fan - Heater

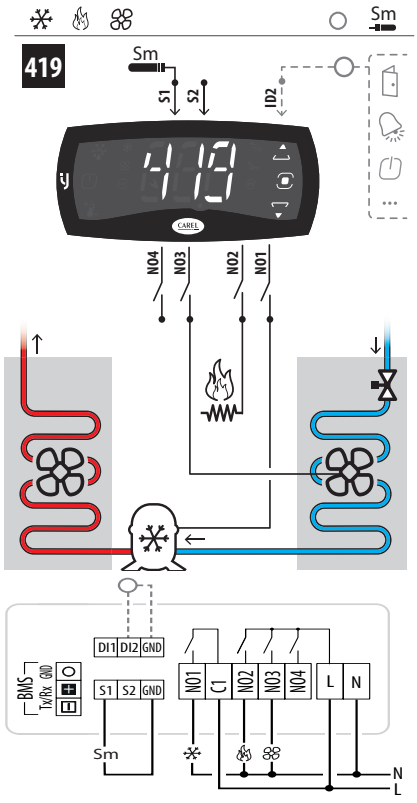


Fig. 12.x

420 - Compressor - Defrost - Fan - Light

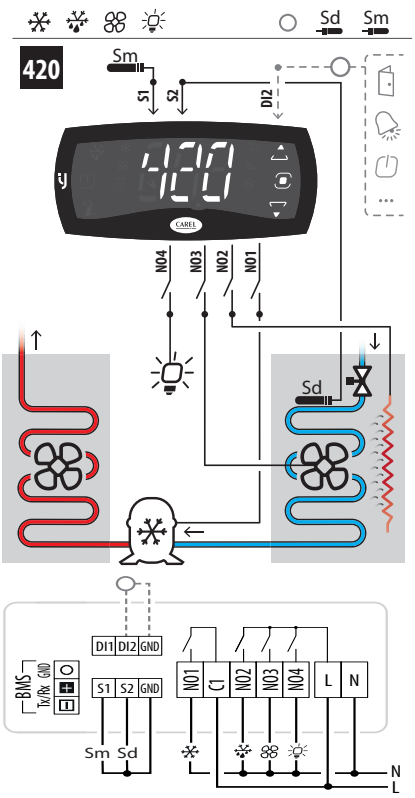


Fig. 12.y

421 - Compressor - Defrost - Fan - Alarm

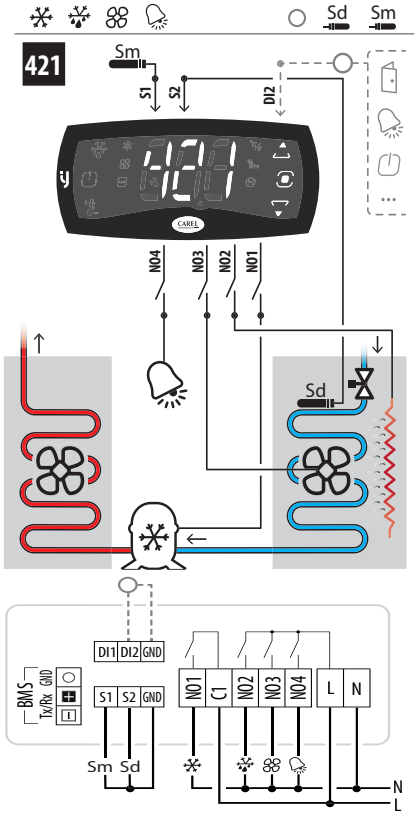


Fig. 12.z

422 - Compressor - Fan - Light - Alarm

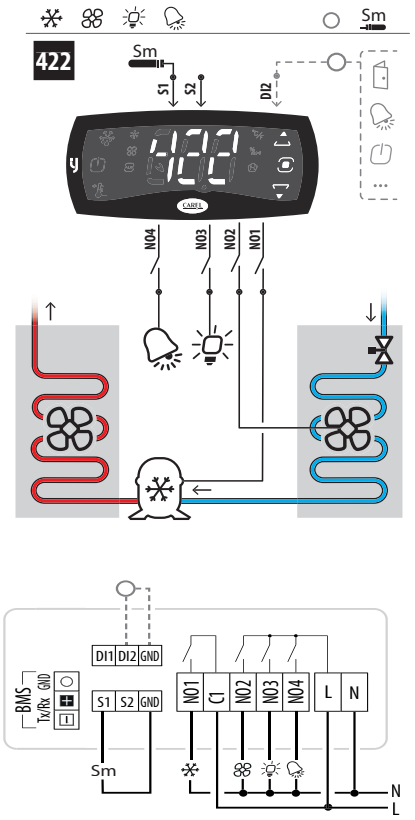


Fig. 12.aa

423 - Compressor - Fan - Heater - Alarm

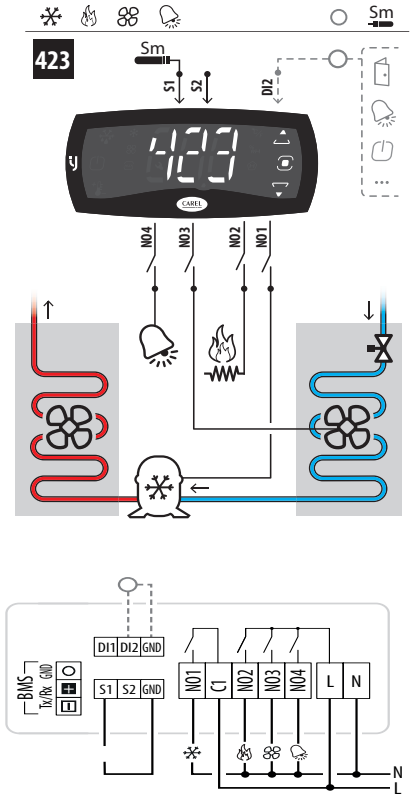


Fig. 12.ab

424 - Compressor - Fan - Humidifier

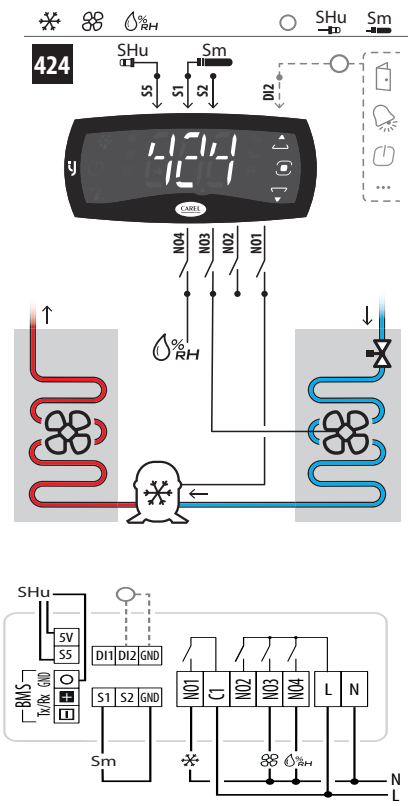


Fig. 12.ac

425 - Compressor - Heater - Fan - Humidifier

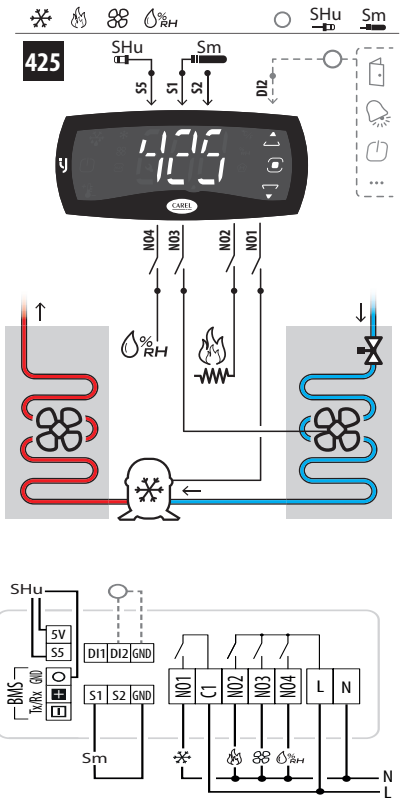


Fig. 12.ad

426 - Compressor - Fan - Humidifier - Alarm

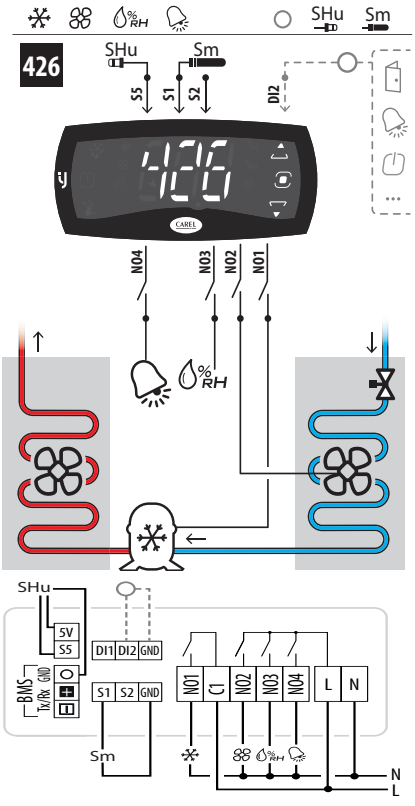


Fig. 12.ae

430 - Compressor - Defrost - Fan - Light - Virtual probe

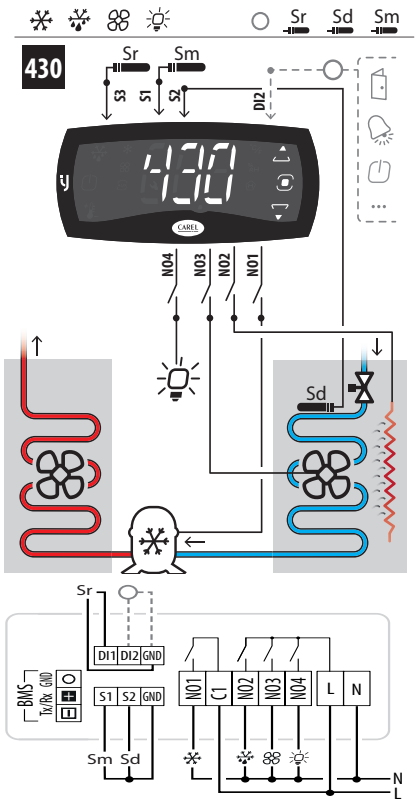


Fig. 12.af

431 - Compressor - Defrost - Fan - Humidifier

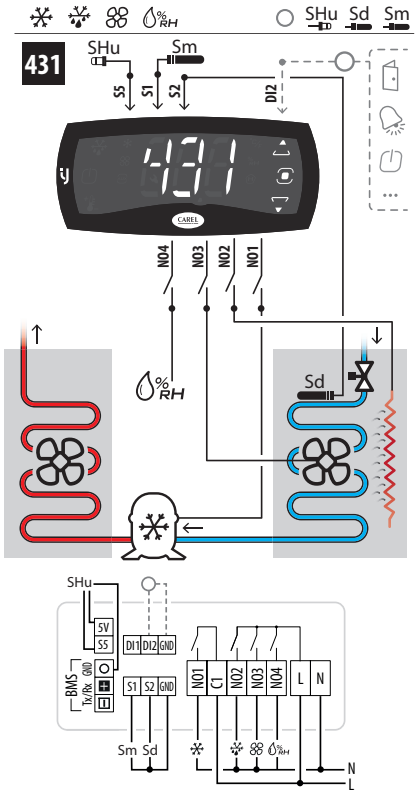


Fig. 12.ag

## Parameters list of configurations with 4 relays

When choosing a configuration, the parameters shown in the table are automatically set.

| Par. | Description | Configuration | | | | | | | | | | | | | | | | | | | | | |
|---|---|---|---|---|---|---|---|---|---|---|---|---|---|---|---|---|---|---|---|---|---|---|---|
| | | 403 | 404 | 405 | 406 | 407 | 408 | 409 | 411 | 416 | 417 | 418 | 419 | 420 | 421 | 422 | 423 | 424 | 425 | 426 | 430 | 431 |
| /FA | Assign outlet temperature probe Sm | 1 | 1 | 1 | 1 | 1 | 1 | 1 | 1 | 1 | 1 | 1 | 1 | 1 | 1 | 1 | 1 | 1 | 1 | 1 | 1 | 1 |
| /Fb | Assign defrost temperature probe Sd | 0 | 2 | 0 | 0 | 0 | 0 | 0 | 0 | 2 | 0 | 0 | 0 | 2 | 2 | 0 | 0 | 0 | 0 | 0 | 2 | 2 |
| /Fc | Assign intake temperature probe Sr | 0 | 0 | 0 | 0 | 0 | 0 | 0 | 0 | 0 | 0 | 0 | 0 | 0 | 0 | 0 | 0 | 0 | 0 | 0 | 3 | 0 |
| /FP | Assign humidity probe | 0 | 0 | 0 | 0 | 0 | 0 | 0 | 5 | 0 | 0 | 0 | 0 | 0 | 0 | 0 | 0 | 5 | 5 | 5 | 0 | 5 |
| DOA | Assign solenoid/compressor digital output | 1 | 1 | 1 | 1 | 1 | 0 | 0 | 1 | 1 | 1 | 1 | 1 | 1 | 1 | 1 | 1 | 1 | 1 | 1 | 1 | 1 |
| DOb | Assign alarm digital output | 0 | 0 | 4 | 0 | 0 | 0 | 4 | 0 | 0 | 4 | 0 | 0 | 0 | 4 | 4 | 4 | 0 | 0 | 0 | 0 | 0 |
| DOE | Assign light digital output | 0 | 0 | 0 | 4 | 0 | 0 | 0 | 0 | 0 | 0 | 4 | 0 | 4 | 0 | 3 | 0 | 0 | 0 | 0 | 4 | 0 |
| DOG | Assign defrost digital output | 0 | 2 | 0 | 2 | 0 | 0 | 0 | 0 | 2 | 0 | 0 | 0 | 2 | 2 | 0 | 0 | 0 | 0 | 2 | 2 | 2 |
| DOI | Assign evaporator fan digital output | 3 | 0 | 0 | 0 | 0 | 3 | 0 | 0 | 3 | 3 | 3 | 3 | 3 | 3 | 2 | 3 | 3 | 3 | 2 | 3 | 3 |
| DOu | Assign humidifi cation digital output | 0 | 0 | 0 | 0 | 0 | 0 | 0 | 4 | 0 | 0 | 0 | 0 | 0 | 0 | 0 | 0 | 4 | 4 | 3 | 0 | 4 |
| DOv | Assign reverse digital output with dead band control | 0 | 0 | 0 | 0 | 2 | 2 | 2 | 0 | 0 | 0 | 0 | 2 | 0 | 0 | 0 | 2 | 0 | 2 | 0 | 0 | 0 |
| GF2 | Custom function associated with the DOWN arrow | 0 | 0 | 0 | 1 | 0 | 0 | 0 | 0 | 0 | 0 | 1 | 0 | 1 | 0 | 1 | 0 | 0 | 0 | 0 | 1 | 0 |
| /P2 | Confi guration of multifunction input S3/ DI | 5 | 5 | 5 | 5 | 5 | 5 | 5 | 5 | 5 | 5 | 5 | 5 | 5 | 5 | 5 | 5 | 5 | 5 | 5 | 3 | 5 |

Tab. 12.c

## 12.5.3 Configurations with 6 relays

601 - Compressor - Defrost - Fan

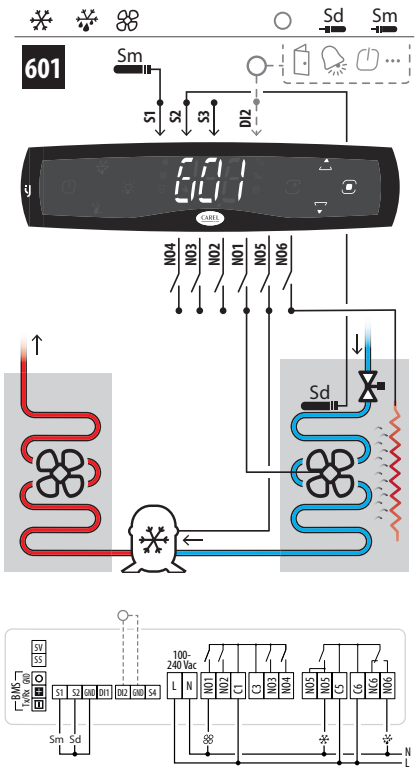


Fig. 12.ah

602 - Compressor - Fan - Alarm

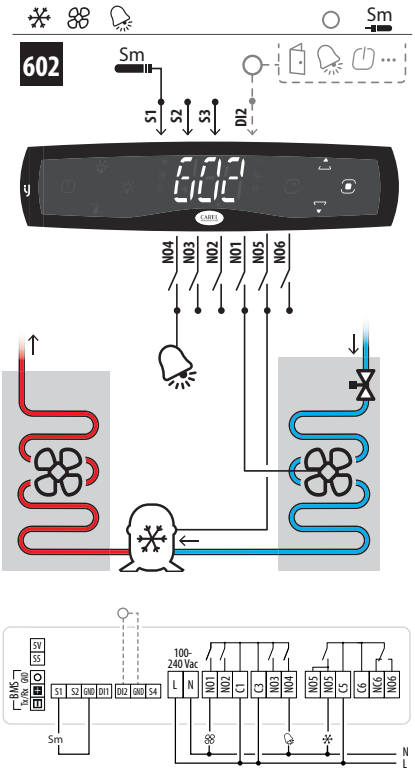


Fig. 12.ai

603 - Compressor - Fan - Light

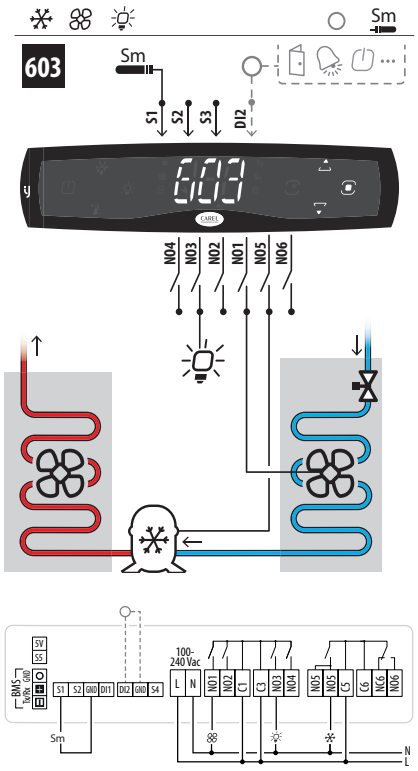


Fig. 12.aj

13.1 Default controller configuration

606 - Compressor - Defrost - Fan - Light - Alarm

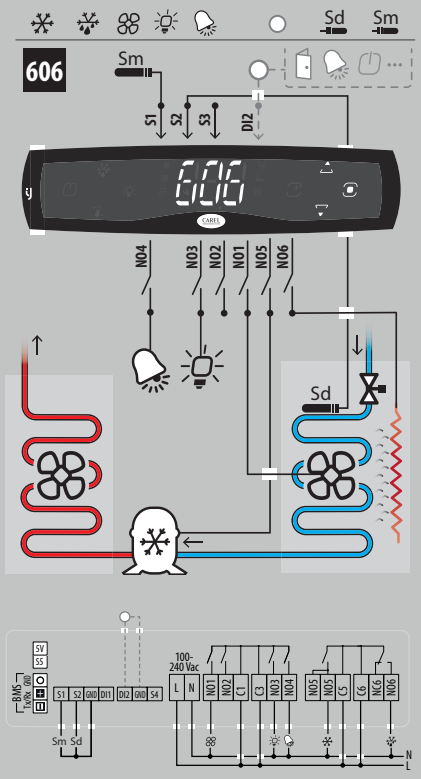


Fig. 12.ak

607 - Compressor - Fan - Light - Alarm

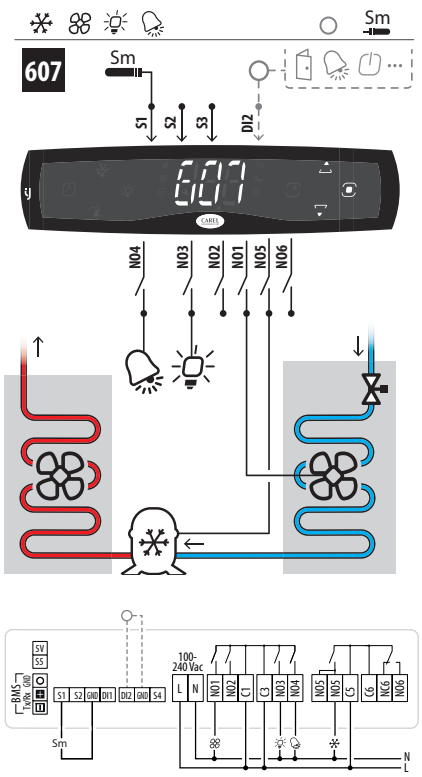


Fig. 12.al

608 - Compressor - Heater - Fan - Alarm

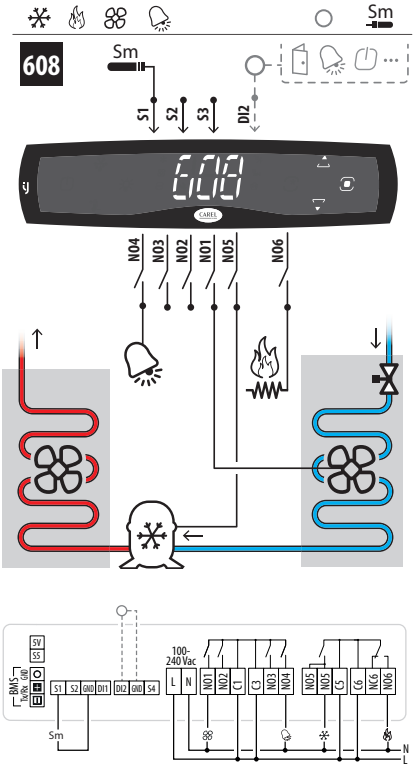


Fig. 12.am

609 - Compressor - Defrost - Fan - Condenser fan - Light

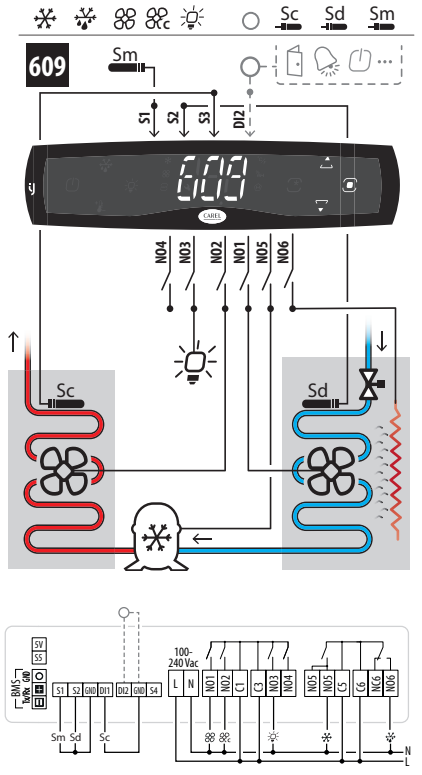


Fig. 12.an

610 - Compressor 1 - Compressor 2 - Defrost - Fan - Light - Alarm

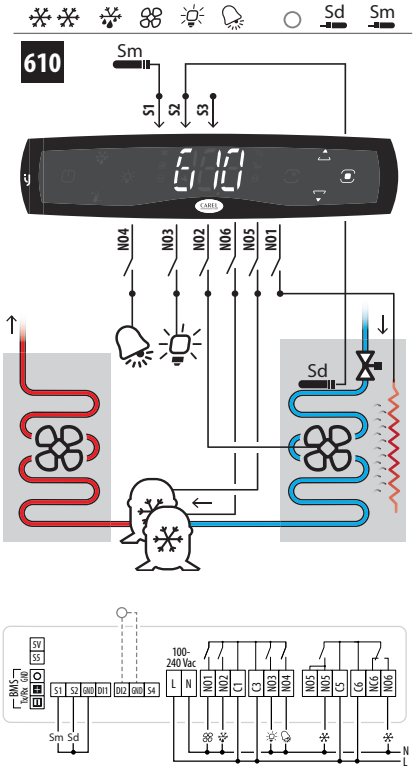


Fig. 12.ao

611 - Compressor - Defrost - Fan - Condenser fan - Light - Alarm

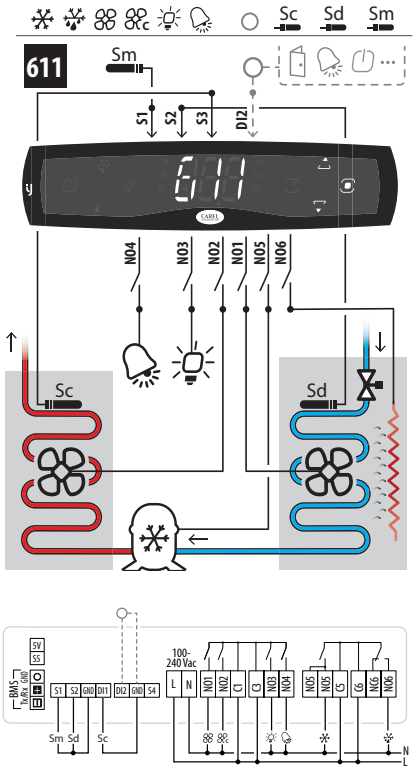


Fig. 12.ap

612 - Compressor - Fan - Humidifier

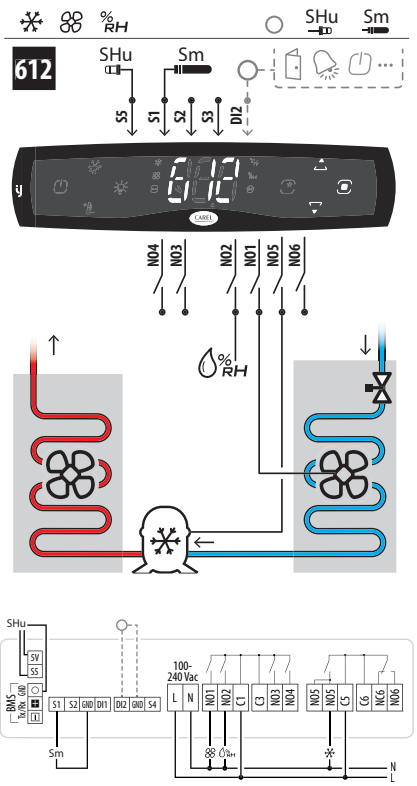


Fig. 12.aq

613 - Compressor - Heater - Fan - Humidifier

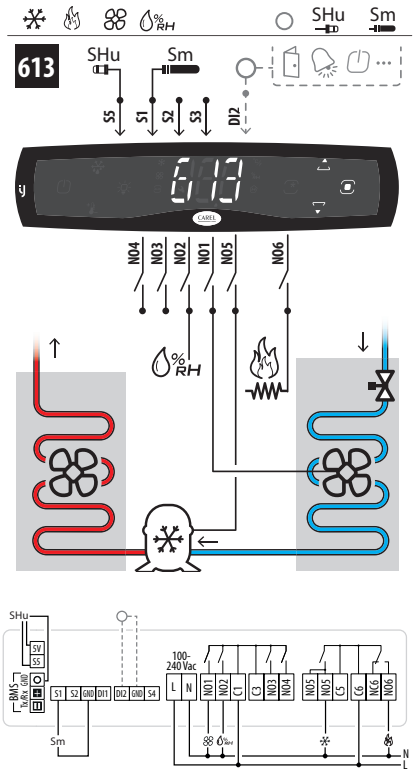


Fig. 12.ar

614 - Compressor - Fan - Humidifier - Alarm

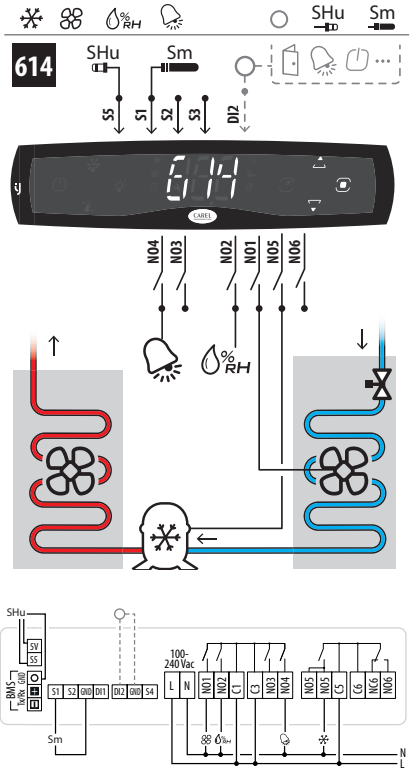


Fig. 12.as

615 - Compressor - Defrost - Humidifier fan - Light - Alarm

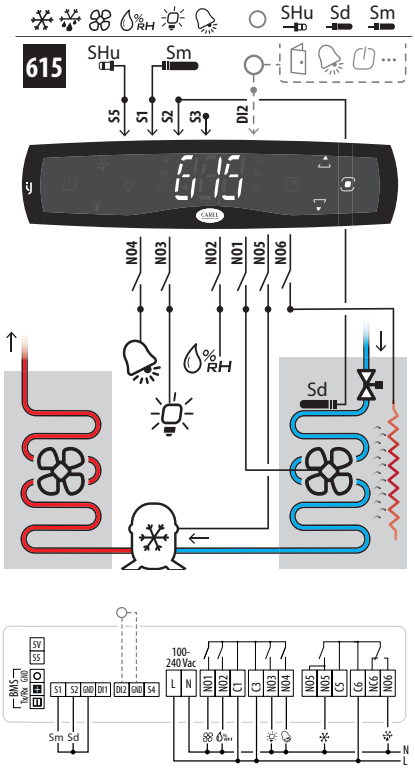


Fig. 12.at

619 - Compressor - Defrost - Fan - Light - Alarm - Virtual probe

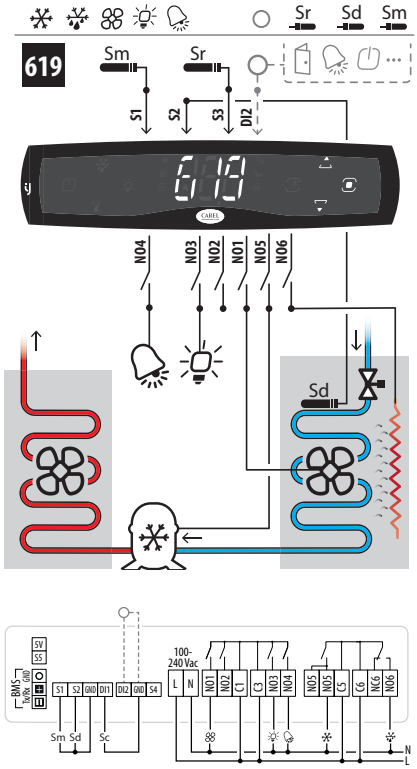


Fig. 12.au

620 - Heater - Fan - Light - Alarm

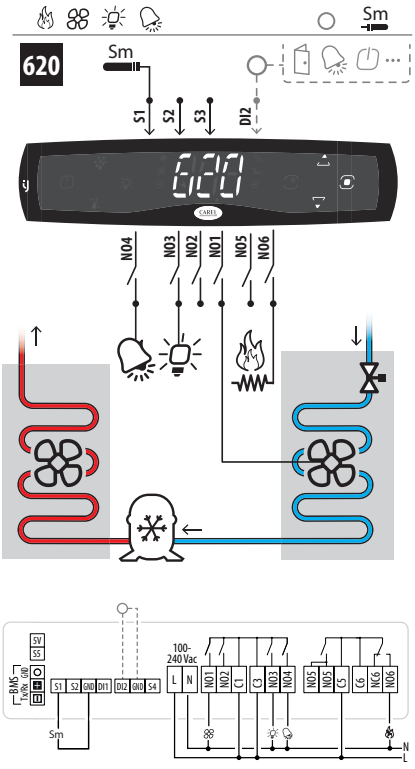


Fig. 12.av

### Parameters list of configurations with 6 relays

When choosing a configuration, the parameters shown in the table are automatically set.

| Par. | Description | Configuration | | | | | | | | | | | | | | |
|---|---|---|---|---|---|---|---|---|---|---|---|---|---|---|---|---|
| | | 601 | 602 | 603 | 606 | 607 | 608 | 609 | 610 | 611 | 612 | 613 | 614 | 615 | 619 | 620 |
| /FA | Assign outlet temperature probe Sm | 1 | 1 | 1 | 1 | 1 | 1 | 1 | 1 | 1 | 1 | 1 | 1 | 1 | 1 | 1 |
| /Fb | Assign defrost temperature probe Sd | 2 | 0 | 0 | 2 | 0 | 0 | 2 | 2 | 2 | 0 | 0 | 0 | 2 | 2 | 0 |
| /Fc | Assign intake temperature probe Sr | 0 | 0 | 0 | 0 | 0 | 0 | 0 | 0 | 0 | 0 | 0 | 0 | 0 | 3 | 0 |
| /Fo | Assign condensing temperature probe | 0 | 0 | 0 | 0 | 0 | 0 | 3 | 0 | 3 | 0 | 0 | 0 | 0 | 0 | 0 |
| /FP | Assign humidity probe | 0 | 0 | 0 | 0 | 0 | 0 | 0 | 0 | 0 | 5 | 5 | 5 | 5 | 0 | 0 |
| DOA | Assign solenoid/compressor digital output | 5 | 5 | 5 | 5 | 5 | 5 | 5 | 5 | 5 | 5 | 5 | 5 | 5 | 5 | 0 |
| DOb | Assign alarm digital output | 0 | 4 | 0 | 4 | 4 | 4 | 0 | 4 | 4 | 0 | 0 | 4 | 4 | 4 | 4 |
| DOE | Assign light digital output | 0 | 0 | 3 | 3 | 3 | 0 | 3 | 3 | 3 | 0 | 0 | 0 | 3 | 3 | 3 |
| DOG | Assign defrost digital output | 6 | 0 | 0 | 6 | 0 | 0 | 6 | 1 | 6 | 0 | 0 | 0 | 6 | 6 | 0 |
| DOI | Assign evaporator fan digital output | 1 | 1 | 1 | 1 | 1 | 1 | 1 | 2 | 1 | 1 | 1 | 1 | 1 | 1 | 1 |
| DOt | Assign condenser fan digital output | 0 | 0 | 0 | 0 | 0 | 0 | 2 | 0 | 2 | 0 | 0 | 0 | 0 | 0 | 0 |
| DOu | Assign humidifi cation digital output | 0 | 0 | 0 | 0 | 0 | 0 | 0 | 0 | 0 | 2 | 2 | 2 | 2 | 0 | 0 |
| DOv | Assign reverse digital output with dead band control | 0 | 0 | 0 | 0 | 0 | 6 | 0 | 0 | 0 | 0 | 6 | 0 | 0 | 0 | 6 |
| DOw | Assign auxiliary parallel compressor digital output | 0 | 0 | 0 | 0 | 0 | 0 | 0 | 6 | 0 | 0 | 0 | 0 | 0 | 0 | 0 |
| GF2 | Custom function associated with the DOWN arrow | 0 | 0 | 1 | 1 | 1 | 0 | 1 | 1 | 1 | 0 | 0 | 0 | 1 | 1 | 1 |
| /P2 | Configuration of multifunction input S3/ DI | 5 | 5 | 5 | 5 | 5 | 5 | 3 | 5 | 3 | 5 | 5 | 5 | 5 | 3 | 5 |

Tab. 12.d

# 13. RELEASE NOTES

The software version is shown for a few seconds when the controllers with user interface are switched on (first two digits only), via the BMS variable or Applica app.
The correspondence between the software version and the manual version is shown below.

| Software version | Manual version | Description |
|---|---|---|
| 1.0.0 | 1.0<br>23/08/2018 | First release |
| 1.4.0 | 1.1<br>31-03-2025 | Password reset procedure and brute force attack prevention algorithm, device upgrade procedure changed, zero crossing paragraph added. |

NOTE:

NOTE:

CAREL

CAREL INDUSTRIES - Headquarters
Via dell'Industria, 11 - 35020 Brugine - Padova (Italy)
Tel. (+39) 049.9716611 - Fax (+39) 049.9716600
e-mail: carel@carel.com - www.carel.com

iJW +0300103EN rel. 1.1 - 31.03.2025