213669
IRSD-20-G3-B4
Inductive ring sensor

- High resolution
- Short response time
- Sensitivity and pulse stretching adjustable
- Resistant to dirt
- Switchable between static and dynamic operating principle
- Metal connector
- High protection type
- Frequency switchable for reducing the installation distance
- Intelligent teach-in process
- Remote Teach



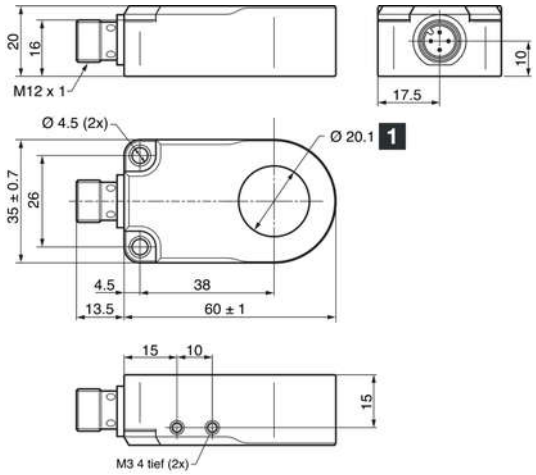

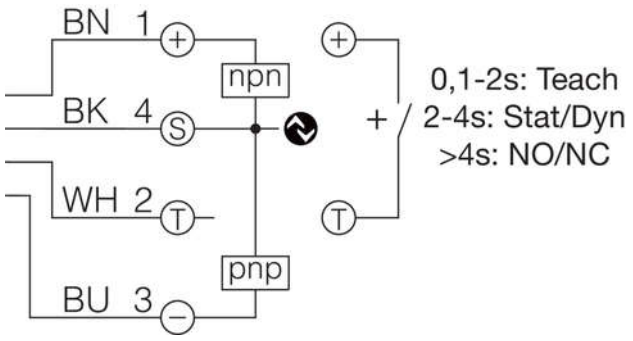

1) Ring diameter

BK: black BN: brown BU: blue WH: white

Function

Technical data (typ.)	+20°C, 24 V DC
Service voltage	10 … 30 V DC
No-load current (max.)	30 mA
Insulation voltage endurance	1000 V
Internal diameter	20.1 mm
Housing material	Plastic (PA)
Material	POM (Ring)
Protection class	III, operation on protective low voltage
Approvals	UL
Operating principle	Dynamic/static switchable (IO-Link / PIN 2)
Switching output	Push-pull/PNP/NPN, 100 mA, NO/NC, switchable
Voltage drop (max.)	2 V
Interface	IO-Link
Pulse stretching	adjustable
Resolution	Ø 1.0 mm (dynamic), Ø 2.5 mm (static)
Sensitivity adjustment	IO-Link
Speed of parts (max.)	35 m/s
Speed of parts (min.)	0.1 m/s (dynamic)
Readiness delay (max.)	300 ms
Shock/vibration load	30 g, 11 ms / 10 … 55 Hz, 1.0 mm
Ambient temperature during operation	-25 … +70 °C

© di-soric . Right to change reserved . 18.11.2024 . Page 1

213669
IRSD-20-G3-B4
Inductive ring sensor

Technical data (typ.)	+20°C, 24 V DC
Permissible relative humidity	< 95% (+25°C) / < 90% (+40°C), non-condensing (increased humidity affects the sensor nominal resolution)
Protection type	IP 67
Connection	Connector, M12, 4-pin, A-coded
Connection cable	VK …

More information / accessories	https://www.di-soric.com/213669

© di-soric . Right to change reserved